Part Number: **BU-11CPS**
Description: **Heavy duty grounding Clip**
3707

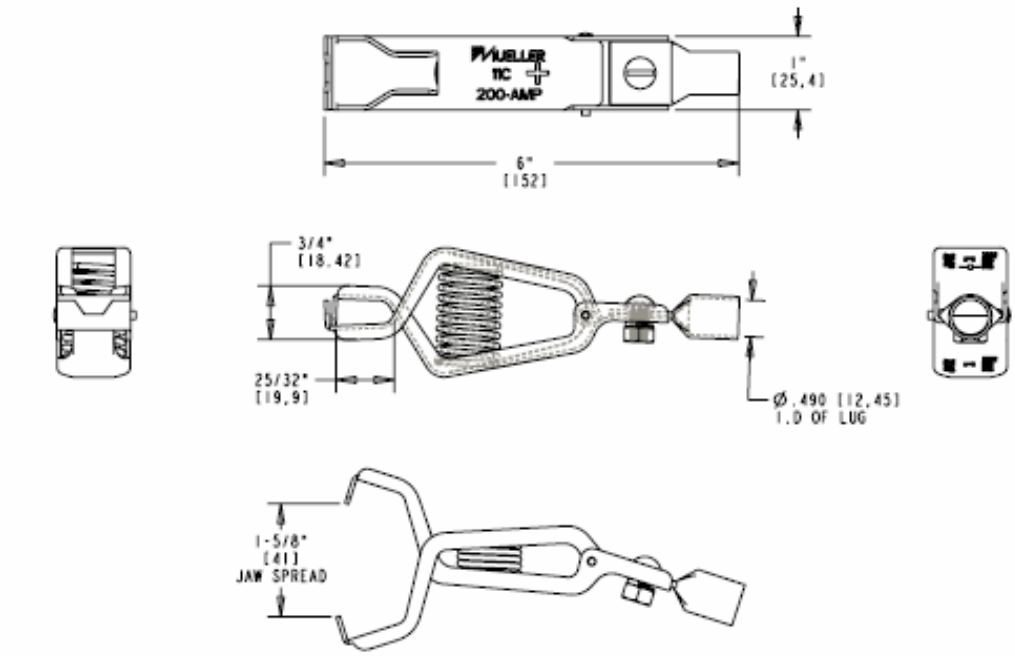

- Heavy duty grounding Clip
- Can be used with up to 0 AWG wire or welding cable
- Material: Solid Copper, Steel Spring
- Also see BU-CPN, for an unmarked clip and BU-APN & BU-APS for lower current carrying steel versions
- Use with Mueller Brand BU-13-* PVC Insulators
- Rating: 200 Amps
- Packaged in Bulk
- RoHS Compliant

Mueller Electric Company *ISO 9001:2000* *TEL. 800-955-2629*
1625 E. 31st Street *Over 95 Years Of Innovation* *TEL. 216-771-5225*
Cleveland, Ohio 44114 *www.muellerelectric.com* *FAX. 216-771-3068*