OMH554

Photoelectric distance sensor

OMHLFCKG/IO-Link/US

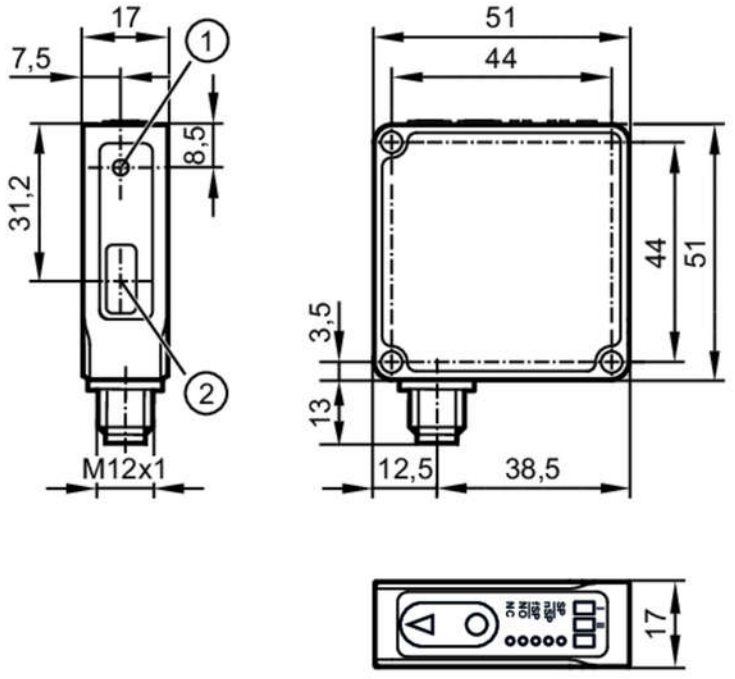

1 transmitter
2 receiver

Product characteristics		
Type of light		red light
Laser protection class		1
Housing		rectangular
Electrical data		
Operating voltage	[V]	10...30 DC; ("supply class 2" to cULus)
Current consumption	[mA]	< 60
Protection class		III
Reverse polarity protection		yes
Power-on delay time	[s]	< 0.3
Type of light		red light
Wave length	[nm]	630
Typ. lifetime	[h]	50000
Inputs / outputs		
Number of inputs and outputs		Number of digital inputs: 1; Number of digital outputs: 2
Inputs		
Inputs		Laser On/ Off
Number of digital inputs		1
Outputs		
Total number of outputs		2
Electrical design		PNP/NPN; (parameterisable)

OMH554

Photoelectric distance sensor

OMHLFCKG/IO-Link/US

Number of digital outputs		2
Output function		normally open / normally closed; (parameterisable)
Max. voltage drop switching output DC	[V]	2.2
Permanent current rating of switching output DC	[mA]	100
Switching frequency DC	[Hz]	150
Notes on switching frequency	[Hz]	standard
Short-circuit protection		yes
Overload protection		yes
Detection zone		
Range adjustable		yes
Max. light spot diameter	[mm]	1
Light spot dimensions refer to		at maximum range
Measuring/setting range		
Measuring range	[m]	0.05...0.5; (6...90% remission)
Accuracy / deviations		
Temperature compensation		yes
Notes on the accuracy / deviation		The indicated values are reached after a warm-up time of 20 minutes.
Measuring range (50... 300 mm)		
Repeatability	[mm]	0.3
Resolution	[mm]	0,3
Measuring range (300..500 mm)		
Repeatability	[mm]	1
Resolution	[mm]	0,5
Software / programming		
Parameter setting options		hysteresis / window / 2-point; Switch-on and switch-off delay; switch-on operations; Teach function; filter; light-on/dark-on mode; laser switch-off; Type of operation
Interfaces		
Communication interface		IO-Link
Transmission type		COM2 (38,4 kBaud)
IO-Link revision		1.1
SDCI standard		IEC 61131-9
Profiles		Measuring and Switching Sensor, 1 channel, Identification and Diagnosis, Sensor Control, Teach two value, Locator, ProductURI
SIO mode		yes
Required master port type		A
Min. process cycle time	[ms]	3.2
IO-Link process data (cyclical)		**function** / **bit length** process value / 16 device status / 4 binary switching information / 2
IO-Link functions (acyclical)		application specific tag; operating hours counter

OMH554

Photoelectric distance sensor

OMHLFCKG/IO-Link/US

Supported DeviceIDs		**Type of operation**	**DeviceID**
		default	1570
Note		For further information please see the IODD PDF file under "Downloads"	
Operating conditions			
Ambient temperature	[°C]	0...60	
Storage temperature	[°C]	-10...65	
Protection		IP 65; IP 67	
Tests / approvals			
EMC		EN 61000-4-2 ESD	4 kV CD / plastics
			8 kV AD / metal
		EN 61000-4-3 HF radiated	10 V/m
		EN 61000-4-6 HF conducted	10 V
		EN 61000-4-4 Burst	2 kV
		EN 55011	class B
Vibration resistance		EN 60068-2-6 Fc	(10-55) Hz 1 mm amplitude, oscillation period 5 min., 30 min. per axis at resonance or 55 Hz
Shock resistance		EN 60068-2-27 Ea	30 g 11 ms half-sine; 3 shocks each in every direction of the 3 coordinate axes
Laser protection class		1	
Notes on laser protection		Caution:	laser light
		laser class:	1
			EN/IEC 60825-1 2007
			EN/IEC 60825-1 2014
			Complies with 21 CFR 1040 except for deviations pursuant to Laser Notice No. 50, dated June 2007.
MTTF	[years]	572	
UL approval		power supply	Class 2
Mechanical data			
Weight	[g]	127.5	
Housing		rectangular	
Dimensions	[mm]	51 x 51 x 17	
Materials		housing: diecast zinc; front pane: plastics	
Tightening torque	[Nm]	5	
Displays / operating elements			
Display		switching status	2 LED, yellow
		supply voltage	1 LED, green
		Operating mode	5 LED, white
Teach function		yes	
Remarks			
Remarks		operating voltage "supply class 2" according to cULus	
Pack quantity		1 pcs.	

OMH554

Photoelectric distance sensor

OMHLFCKG/IO-Link/US

Electrical connection

Connector: 1 x M12; coding: A

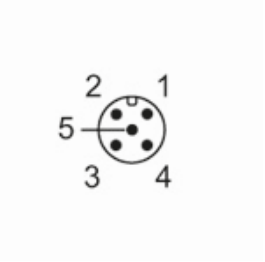

Connection

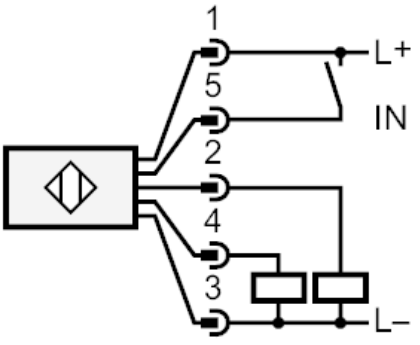

2:	OUT2: switching output
4:	OUT1: switching output or IO-Link
5:	IN1: Laser On/ Off