multimec®

Flat cap can be used with foil overlay

- Round caps
- Excellent option for foil overlay
- Ø11 mm; Ø15 mm
- h =12.5 mm
- Material:
- Temp. Range:
  - Solid cap: -40/+160°C
  - Transparent cap: -40/+85°C
- Panel cut-out: 1GAS/1GCS-Ø11.4; Ø15.4



All dimensions in mm

DIMENSIONS

SMD + 1GAS

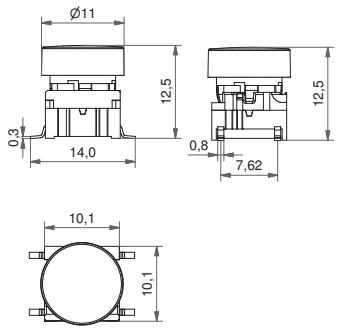

SMD w/LED + 1GAS

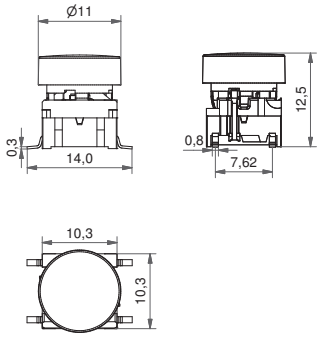

TH + 1GCS

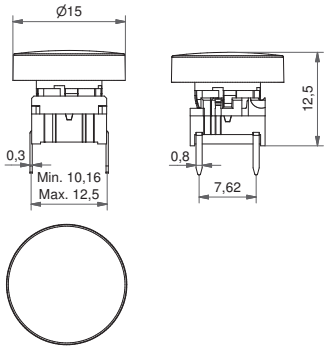

TH w/LED + 1GCS

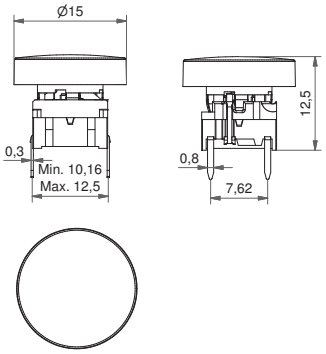

ILLUMINATED – HOW TO ORDER

Switch	Mounting	Actuation force	LED		Cap transparent colour	Colour code
5G				+		
	TH9 through-hole	**20**	**01** blue		**1GAS**	**11** transparent
	SH9 surface mount	**35**	**22** green			**16** frosted white
		65	**42** yellow		**1GCS**	
		Q*	**61** white			
			82 red			
			2242 green/yellow			
			8222 red/green			
			8242 red/yellow			

*For an illuminated quiet 2.0N switch add Q to the end of the switch part number.

NON-ILLUMINATED– HOW TO ORDER

Switch	Mounting	Actuation force		Cap solid colour	Colour code
5G			+		
	TH9 through-hole	**20**		**1GAS**	**00** blue
	SH9 surface mount	**20Q**			**02** green
		35		**1GCS**	**03** grey
		65			**04** yellow
					06 white
					08 red
					09 black

Ordering example:
5GSH935 + 1GAS09 without illumination OR 5GTH96501 + 1GCS16 with illumination OR *5GTH92061Q (illuminated quiet version)
Please see colour codes, updates of products and changes of specifications on www.mec.dk