Inductive Sensors

BES 516-3005-G-E5-C-S49

Ordercode: BES00HF

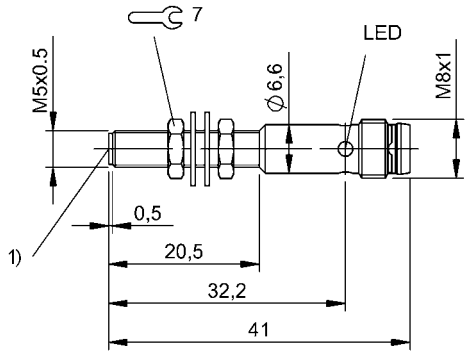

1) Sensing surface

Display/Operation

Function indicator	yes
Power indicator	no

Electrical connection

Connection	M8x1-Male, 3-pole
Protection against device mix-ups	yes
Short-circuit protection	yes

Electrical data

Load capacitance max. at Ue	1 µF
No-load current Io max., undamped	2 mA
No-load current Io max., damped	6 mA
Operating voltage Ub	10…30 VDC
Output resistance Ra	Open drain
Polarity reversal protected	yes
Rated insulation voltage Ui	75 V DC
Rated operating current Ie	100 mA
Rated operating voltage Ue DC	24 V
Rated short circuit current	100 A
Ready delay tv max.	21 ms
Residual current Ir max.	10 µA
Residual ripple max. (% of Ue)	10 %
Switching frequency	5000 Hz
Utilization category	DC-13
Voltage drop static max.	2 V

Environmental conditions

Ambient temperature	-25…70 °C
Contamination scale	3
EN 60068-2-27, Shock	Half-sinus, 30 gn, 11 ms
EN 60068-2-6, Vibration	55 Hz, amplitude 1 mm, 3x30 min
IP rating	IP67

Functional safety

MTTF (40 °C)	305 a

General data

Approval/Conformity	cULus CE EAC
Basic standard	IEC 60947-5-2

Material

Housing material	Stainless steel
Material sensing surface	PBT

Mechanical data

Dimension	Ø 5 x 41 mm
Installation	flush
Size	M5x0.5
Tightening torque	1 Nm

Output/Interface

Switching output	PNP Normally open (NO)

Range/Distance

Assured operating distance Sa	1.21 mm

BES 516-3005-G-E5-C-S49
Ordercode: BES00HF

Effective operating distance Sr	1.5 mm
Hysteresis H max. (% of Sr)	15.0 %
Rated operating distance Sn	1.5 mm
Repeat accuracy max. (% of Sr)	5.0 %
Switching distance marking	■■
Temperature drift max. (% of Sr)	10 %
Tolerance Sr	±10 %

Remarks

The sensor is functional again after the overload has been eliminated.
EMC: Surge resistance
External protection circuit is required. Document 825345, Section 2.

For further information about the MTTF and B10d see MTTF / B10d certificate

Indication of the MTTF- / B10d value does not represent a binding composition and/or life expectancy assurance; these are simply experiential values with no warranty implications. These declared values also do not extend the expiration period for defect claims or affect it in any way.

Connector view



Wiring Diagram

