SERIES 1840 - SINGLE AND DOUBLE-POLE PUSHBUTTON SWITCHES

TO 6 (4) A 250 V AC



PRODUCT FEATURES

- 100 million times proven switching principle with longer life endurance with 100 000 mechanical switching cycles
- Fastening by round nut M12
- Excellent actuating characteristic
- Variant for snapping on customized pushbuttons

ON REQUEST

- Higher power with 6 (6) A 250 V AC
- Other terminal types
- Cable assembly

Mechanical life endurance		10E4
Contact resistance (new condition)		< 100 mOhm (1 A 12 V DC)
Insulation resistance (new condition)		> 100 MOhm (500 V DC)
Proof tracking		250 PTI
Protection type		IP 40
Ambient temperature		terminal side -20 °C ... +100 °C actuating side -20 °C ... +55 °C
Flammability		UL 94 V-2
Glow wire test temperature		850 °C
Material	actuator housing terminals	PA PA glass fiber-reinforced / PA silver plated
Plug force of the terminals		≤ 80 N
Approval marks		/ /
Suitable for appliances of protection class II		







SERIES 1840 - SINGLE AND DOUBLE-POLE PUSHBUTTON SWITCHES

TO 6 (4) A 250 V AC



single-pole



	Actuator color / printing	Housing color	6 (4) A 250 V AC 5E4	6 (2) A 250 V AC 5E4	6 A 250 V AC 1/2 HP	6 A 125 V AC 1/4 HP	6 A 125 - 250 V AC 1/8 HP	Terminal type	Terminal description	Contact distance in mm	Contact material	Miscellaneous	Stock version
ON / OFF switch (SPST)													
1841.1101			●		●	●			4.8	≥ 3	Ag		●
1841.6101			●		●	●			4.8	≥ 3	Ag	snap-on actuator caps see page 105	
Normally closed contact (SPNC)													
1841.1301				●			●		4.8	≥ 3	Ag		●
Normally open contact (SPNO)													
1841.1201				●			●		4.8	≥ 3	Ag		●
Changeover switch (SPDT)													
1843.1101			●		●	●			4.8	≥ 3	Ag		
Changeover switch (SPDT momentary)													
1843.1201				●			●		4.8	≥ 3	Ag		●



double-pole

	Actuator color / printing	Housing color	6 (4) A 250 V AC 5E4	6 (2) A 250 V AC 5E4	6 A 250 V AC 1/2 HP	6 A 125 V AC 1/4 HP	6 A 125 - 250 V AC 1/8 HP	Terminal type	Terminal description	Contact distance in mm	Contact material	Miscellaneous	Stock version
ON / OFF switch (DPST)													
1842.1101			●		●	●			4.8	≥ 3	Ag		
1842.6101			●		●	●			4.8	≥ 3	Ag	snap-on actuator caps see page 105	

SERIES 1840 - SINGLE AND DOUBLE-POLE PUSHBUTTON SWITCHES

TO 6 (4) A 250 V AC



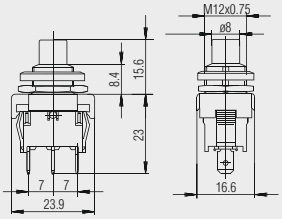

Basic types 1841 and 1843
single-pole

Quick-connect terminal
4.8 x 0.8



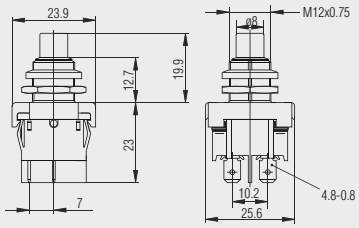

Basic type 1842
double-pole

Quick-connect terminal
4.8 x 0.8



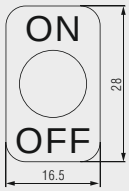

Identification plate
240.001.011

Identification plate of aluminum for plugging on with black inscription “ON” and “OFF”



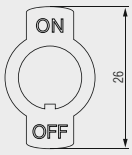

Identification plate
240.002.011

Identification plate of CuZn nickel-plated for plugging on as well as with twist protection and stamped inscription “ON” and “OFF”



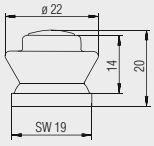

Protection cap
343.002.023

Neopren® - cap for pushbutton (M12 x 0.75) basic type 1840 as dust and water protection. Pushbutton plate on top of cap is CuZn nickel plated.

SERIES 1840 - SINGLE AND DOUBLE-POLE PUSHBUTTON SWITCHES

TO 6 (4) A 250 V AC



Pushbutton
205.008.011

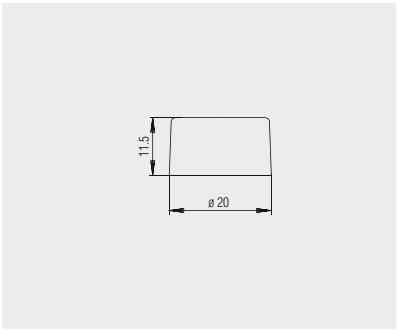

Pushbutton of PA black, with diameter 20 mm for assembly by customer on 1841.6101 and 1842.6101



Pushbutton
203.106.011

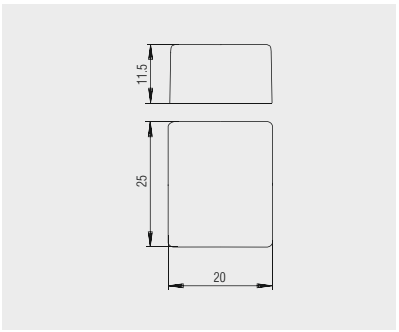

Pushbutton of PA black, rectangular 20 x 25 mm for assembly by customer on 1841.6101 and 1842.6101