View product details on medias

26.12.2024, 06:06:29 UTC

SCHAEFFLER



FAG

29416-E1-XL

Axial spherical roller bearing

Axial spherical roller bearing 294..-E1-XL, no flanging ring

X-life

Technical information

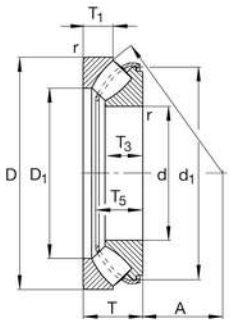

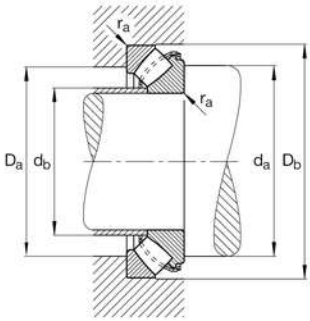

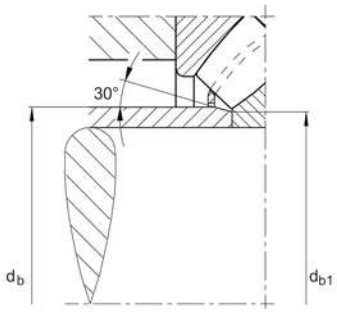

Your current product variant

Heat treatment	-ZZ	Standard
Locating feature, shaft washer	Without	
Handling thread holes	Without	
Constricted width and inclination variation	Standard	
Test certificate	Without	

Main Dimensions & Performance Data

d	80 mm	Bore diameter
D	170 mm	Outside diameter
T	54 mm	Height
C_a	720,000 N	Basic dynamic load rating, axial
C_{0a}	1,720,000 N	Basic static load rating, axial
C_{ua}	199,000 N	Fatigue load limit, axial
n_G	4,350 1/min	Limiting speed
$n_{\vartheta r}$	2,140 1/min	Reference speed
≈m	5.32 kg	Weight

The datasheet is only an overview of dimensions and basic load ratings of the selected product. Please always observe all further information and guidelines for this product.For further information you can use the contact form on our website

Mounting dimensions

$d_{a\ min}$	125 mm	Minimum diameter shaft shoulder
$D_{a\ max}$	141 mm	Maximum diameter of housing shoulder
$D_{b\ min}$	173 mm	Minimum bore diameter housing
$d_{b\ max}$	88 mm	Maximum distance sleeve
$r_{a\ max}$	2.1 mm	Maximum recess radius

Dimensions

D_1	112.5 mm	Bore diameter housing washer
d_1	150.9 mm	Rip diameter shaft washer
r_{min}	2.1 mm	Minimum chamfer dimension
T_1	26.5 mm	Height of the housing washer
T_3	35 mm	Height of the shaft washer
T_5	48.5 mm	Distance shaft washer - cage
A	50 mm	Distance of the center point

Temperature range

T_{min}	-30 °C	Operating temperature min.
T_{max}	200 °C	Operating temperature max.

Characteristics



Radial load



Axial load in one direction


Grease Lubrication


Oil Lubrication


Not sealed


Static angular error and misalignment


Dynamic angular error and misalignment

The datasheet is only an overview of dimensions and basic load ratings of the selected product. Please always observe all further information and guidelines for this product.For further information you can use the contact form on our website