DIRIS Ap



DIRIS Ap

1. Backlit LCD display
2. Push-button for currents
3. Push-button for voltages and frequency
4. Push-button for active, reactive and apparent power
5. Push-button for power factor
6. Push-button for max. current, values, powers and harmonics (optional)
7. Push-button for hour run meter and energies (optional).

Functions

The **DIRIS AP** is a multi-function meter for measuring electrical values in single, two phase and three phase, low and high voltage networks. All the parameters can be configured and displayed on its front panel and measuring and timing functions used.

The user can also connect plug-in modules to the rear of the device at any time, adding such functions as:

- Energy metering
- Measuring harmonics
- Alarm
- Communications.
- Analog outputs

Compliance with standards

- IEC 61036 class 1
- IEC 61268 class 2
- IEC 60068-2
- IEC 61000-2
- IEC 61000-4
- IEC 61010-1

Applications

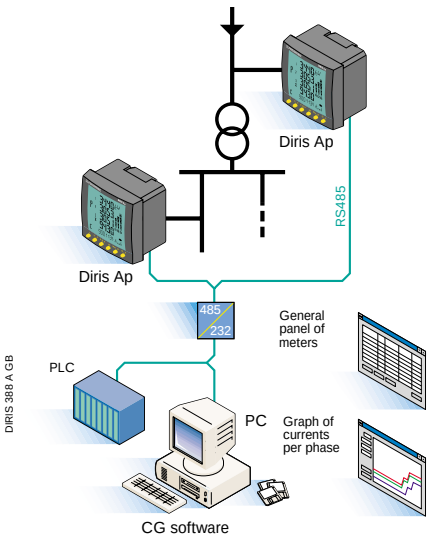

Using electrical parameters means using several analog or digital single-function products such as ammeters, voltmeters or wattmeters.

DIRIS Ap, with its six direct access keys and LCD display, lets you use all the parameters in an LV and HV installation. These parameters can be centralized on a PC or PLC through an RS485 link using JBUS/MODBUS® protocol.

The casing is designed so that the installer can easily fit the DIRIS Ap to the door of a cabinet. To facilitate and optimize the operator's work, the DIRIS Ap uses one of the most functional principles for integrating communications, counting, harmonics, analog outputs or alarm relays. Simply fit a module to the rear of the casing to add a function.

Measurement of real effective values (TRMS):

- current per phase and neutral in instant, average and maximum over a programmable period;
- phase-to-neutral and phase-to-phase voltages;
- frequency;
- active power in 4 quadrants (±) per phase and total in instant, mean and maximum values over a programmable period;
- reactive power in 4 quadrants (±) per phase and total in instant, average and maximum values over a programmable period;
- apparent power in 4 quadrants (±) per phase and total in instant, average and maximum values over a programmable period;
- Power Factor (PF) per phase and total with inductive or capacitive indication.

Hour run meter

Hour run meter to 1/100th of an hour for the duration of operation.