22208 E

SKF Explorer

Dimensions

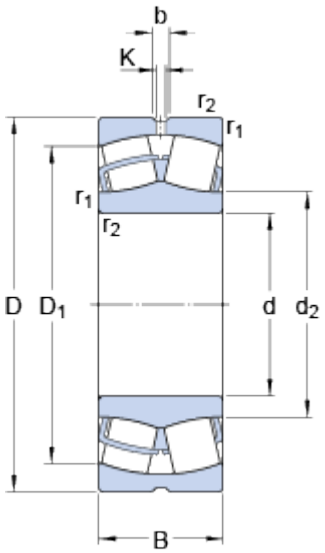

d		40	mm
D		80	mm
B		23	mm
d_2	≈	49.6	mm
D_1	≈	69.4	mm
b		6	mm
K		3	mm
$r_{1,2}$	min.	1.1	mm

Abutment dimensions

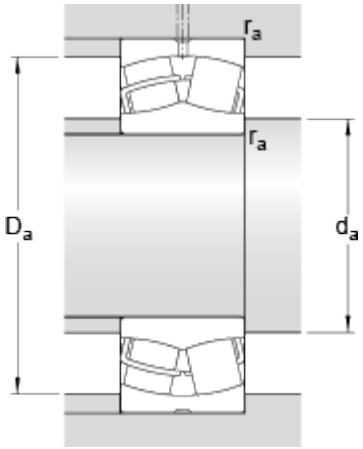

d_a	min.	47	mm
D_a	max.	73	mm
r_a	max.	1	mm

Calculation data

Basic dynamic load rating	C	98.5	kN
Basic static load rating	C_0	91.5	kN
Fatigue load limit	P_u	10	kN
Reference speed		8000	r/min
Limiting speed		11000	r/min
Calculation factor	e	0.28	
Calculation factor	Y_1	2.4	
Calculation factor	Y_2	3.6	
Calculation factor	Y_0	2.5	

Mass

Mass	0.53	kg