Piston rod cylinders → Standard cylinders

Profile cylinder, ISO 15552, Series PRA

► Ø 32 - 125 mm ► Ports: G 1/8 - G 1/2 ► double-acting ► with magnetic piston ► cushioning: pneumatic, adjustable, elastic ► piston rod: external thread ► ATEX optional



00134193

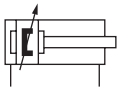

a15

Standards	ISO 15552
Compressed air connection	internal thread
Working pressure min./max.	1.5 bar / 10 bar
Ambient temperature min./max.	-20°C / +80°C
Medium temperature min./max.	-20°C / +80°C
Medium	Compressed air
Max. particle size	50 μm
Oil content of compressed air	0 mg/m³ - 5 mg/m³
Pressure for determining piston forces	6,3 bar

Materials:	
Cylinder tube	Aluminum, anodized
Piston rod	Stainless steel
Front cover	Die-cast aluminum
End cover	Die-cast aluminum
Seal	Polyurethane
Nut for piston rod	Steel, galvanized
Scraper	Polyurethane

Technical Remarks

- The pressure dew point must be at least 15 °C under ambient and medium temperature and may not exceed 3 °C.
- The oil content of air pressure must remain constant during the life cycle.
- Use only the approved oils from Bosch Rexroth, see chapter „Technical information“.
- ATEX-certified cylinders can be generated in the Internet configurator.
- ATEX ID II 2G2D c T4 T135°C -20°C ≤Ta ≤60°C
- For ATEX-certified cylinders, the temperature range specified in the header does not apply. See the ATEX ID.

Piston Ø		[mm]	32	40	50	63	80
Retracting piston force		[N]	435	660	1035	1765	2855
Extending piston force		[N]	505	790	1235	1960	3165
Cushioning length		[mm]	11.5	15	17	16.5	19.5
Cushioning energy		[J]	4.8	9	15	27	54
Weight	0 mm stroke	[kg]	0.5	0.65	1.06	1.42	2.37
	+10 mm stroke	[kg]	0.022	0.032	0.047	0.054	0.085
Stroke max.		[mm]	1600	1900	2100	2500	2800

Piston Ø		[mm]	100	125			
Retracting piston force		[N]	4635	7220			
Extending piston force		[N]	4945	7725			
Cushioning length		[mm]	19.5	22			
Cushioning energy		[J]	88	140			
Weight	0 mm stroke	[kg]	3.51	6.72			
	+10 mm stroke	[kg]	0.1	0.15			
Stroke max.		[mm]	2800	2750			

Piston rod cylinders → Standard cylinders

Profile cylinder, ISO 15552, Series PRA

► Ø 32 - 125 mm ► Ports: G 1/8 - G 1/2 ► double-acting ► with magnetic piston ► cushioning: pneumatic, adjustable, elastic ► piston rod: external thread ► ATEX optional

	Piston Ø Piston rod thread Ports Piston rod Ø	32 M10x1,25 G 1/8 12	40 M12x1,25 G 1/4 16	50 M16x1,5 G 1/4 20	63 M16x1,5 G 3/8 20	80 M20x1,5 G 3/8 25
	Stroke 25	**0822120001**	**0822121001**	**0822122001**	**0822123001**	**0822124001**
	50	**0822120002**	**0822121002**	**0822122002**	**0822123002**	**0822124002**
	80	**0822120003**	**0822121003**	**0822122003**	**0822123003**	**0822124003**
	100	**0822120004**	**0822121004**	**0822122004**	**0822123004**	**0822124004**
	125	**0822120005**	**0822121005**	**0822122005**	**0822123005**	**0822124005**
	160	**0822120006**	**0822121006**	**0822122006**	**0822123006**	**0822124006**
	200	**0822120007**	**0822121007**	**0822122007**	**0822123007**	**0822124007**
	250	**0822120008**	**0822121008**	**0822122008**	**0822123008**	**0822124008**
	320	**0822120009**	**0822121009**	**0822122009**	**0822123009**	**0822124009**
	400	**0822120010**	**0822121010**	**0822122010**	**0822123010**	**0822124010**
	500	**0822120011**	**0822121011**	**0822122011**	**0822123011**	**0822124011**
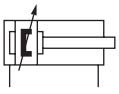	**Piston Ø** **Piston rod thread** **Ports** **Piston rod Ø**	**100** **M20x1,5** **G 1/2** **25**	**125** **M27x2** **G 1/2** **32**			
	Stroke 25	**0822125001**	R480140491			
	50	**0822125002**	R480140455			
	80	**0822125003**	R480141371			
	100	**0822125004**	R480079499			
	125	**0822125005**	R480140083			
	160	**0822125006**	R480079809			
	200	**0822125007**	R480140833			
	250	**0822125008**	R480141106			
	320	**0822125009**	R480140759			
	400	**0822125010**	R480141373			
	500	**0822125011**	R480141666			

Profile cylinder, ISO 15552, Series PRA

► Ø 32 - 125 mm ► Ports: G 1/8 - G 1/2 ► double-acting ► with magnetic piston ► cushioning: pneumatic, adjustable, elastic ► piston rod: external thread ► ATEX optional

Dimensions

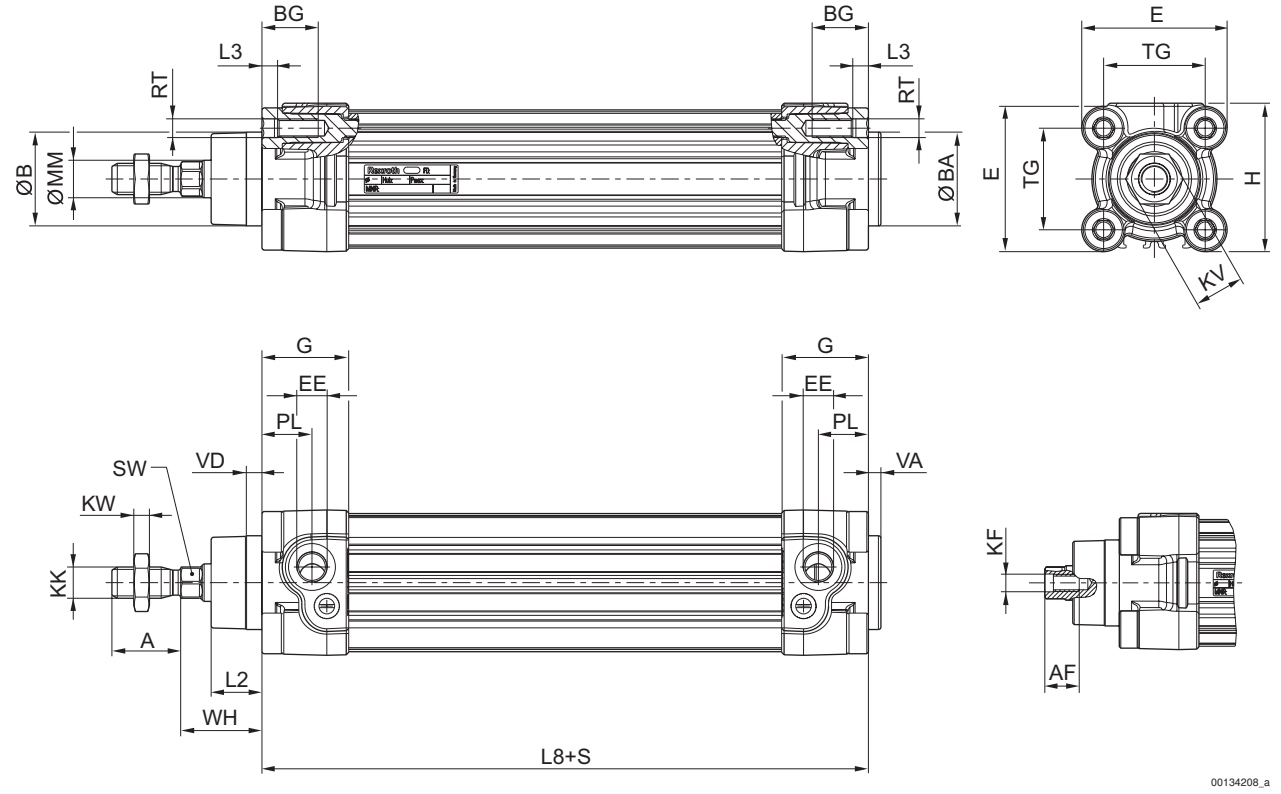

S = stroke

Piston Ø	A -2	AF+1	ØB d11	ØBA d11	BG min.	E	EE	G	H	KF	KK
32	22	12	30	30	16	46.5	G 1/8	27.75	47.5	M6	M10x1,25
40	24	13.5	35	35	16	53	G 1/4	33.25	53	M8	M12x1,25
50	32	17	40	40	16	65	G 1/4	31	65	M10	M16x1,5
63	32	17	45	45	16	75	G 3/8	38.25	75	M10	M16x1,5
80	40	21	45	45	17	95	G 3/8	38.25	95	M12	M20x1,5
100	40	21	55	55	17	115	G 1/2	42.25	115	M12	M20x1,5
125	54	28	60	60	20	140	G 1/2	53.85	140	M16	M27x2

Piston Ø	KV	KW	ØMM f8	PL	L2	L3 ±0,5	L8	RT	SW	TG	VA -1	VD
32	16	5	12	16	16.25	4.5	94±0,4	M6	10	32,5±0,5	4	5
40	18	6	16	20	18.25	4.5	105±0,7	M6	13	38±0,5	4	5
50	24	8	20	19	25	4.5	106±0,7	M8	17	46,5±0,6	4	5
63	24	8	20	24	25	4.5	121±0,8	M8	17	56,5±0,7	4	5
80	30	10	25	23.5	33	0	128±0,8	M10	22	72±0,7	4	5
100	30	10	25	25	36	0	138±1	M10	22	89±0,7	4	5
125	41	13.5	32	33	45	0	160±1	M12	27	110±1,1	6	7

Piston Ø	WH
32	26±1,4
40	30±1,4
50	37±1,4
63	37±1,8
80	46±1,8
100	51±1,8

Profile cylinder, ISO 15552, Series PRA

► Ø 32 - 125 mm ► Ports: G 1/8 - G 1/2 ► double-acting ► with magnetic piston ► cushioning: pneumatic, adjustable, elastic ► piston rod: external thread ► ATEX optional

Piston Ø	WH												
125	65±2,2												