KD5039

Capacitive sensor

KDE3060-FPKG/NI/US-100-KPF

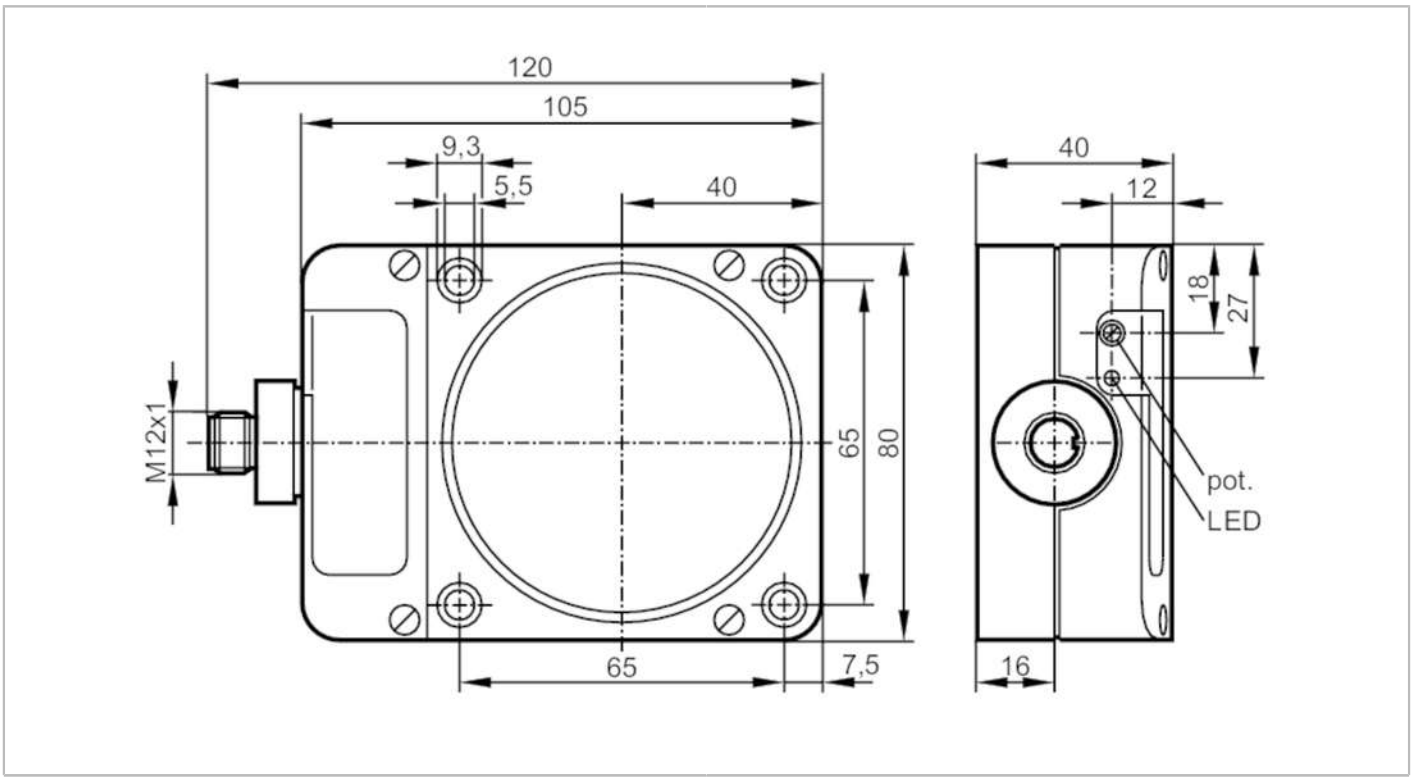

Product characteristics		
Electrical design		PNP
Output function		normally open / normally closed; (selectable)
Sensing range	[mm]	60
Housing		rectangular
Dimensions	[mm]	105 x 80 x 40
Electrical data		
Operating voltage	[V]	10...36 DC
Current consumption	[mA]	5; (24 V)
Protection class		II
Reverse polarity protection		yes
Outputs		
Electrical design		PNP
Output function		normally open / normally closed; (selectable)
Max. voltage drop switching output DC	[V]	2.5
Permanent current rating of switching output DC	[mA]	250
Switching frequency DC	[Hz]	10
Short-circuit proof		yes
Overload protection		yes
Detection zone		
Sensing range	[mm]	60

KD5039

Capacitive sensor

KDE3060-FPKG/NI/US-100-KPF

Real sensing range Sr	[mm]	60 ± 10 %	
Operating distance	[mm]	0...48.6	
Accuracy / deviations			
Correction factor		glass: 0.4 / water: 1 / ceramics: 0.2 / PVC: 0.2	
Hysteresis	[% of Sr]	1...15	
Switch point drift	[% of Sr]	-15...15	
Operating conditions			
Ambient temperature	[°C]	-25...80	
Protection		IP 65	
Tests / approvals			
EMC		EN 60947-5-2	
MTTF	[years]	537	
Mechanical data			
Weight	[g]	309.5	
Housing		rectangular	
Mounting		non-flush mountable	
Dimensions	[mm]	105 x 80 x 40	
Materials		PPE modified	
Displays / operating elements			
Display		switching status	1 x LED, yellow
Accessories			
Items supplied		spring washers: 4	
		cylinder screws: 4	
Remarks			
Pack quantity		1 pcs.	

KD5039

Capacitive sensor

KDE3060-FPKG/NI/US-100-KPF

Electrical connection - plug

Connector: 1 x M12; coding: A



