E12772

Connecting cable with socket

ADOGB050ZDS0002B05

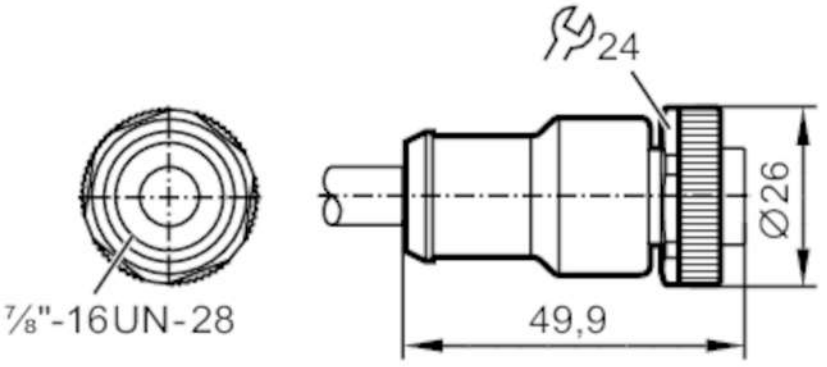

Application			
Special feature		Gold-plated contacts; Drag chain suitability	
Electrical data			
Operating voltage	[V]	< 400 AC/DC	
Protection class		II	
Max. current load total	[A]	5	
Operating conditions			
Ambient temperature	[°C]	-25...80	
Protection		IP 68	
Mechanical data			
Weight	[g]	187.7	
Dimensions	[mm]	26 x 26 x 49.9	
Moulded-body material		PUR	
Material nut		diecast zinc	
Drag chain suitability		yes	
Drag chain suitability		bending radius for flexible use	min. 7.5 x cable diameter
		travel speed	max. 3.3 m/s for a horizontal travel length of 5 m and max. acceleration of 5 m/s²
		bending cycles	> 5 Mio.
Remarks			
Pack quantity		1 pcs.	

E12772

Connecting cable with socket

ADOGB050ZDS0002B05

Electrical connection

Cable: 2 m, PUR, black, Ø 7.3 mm; 5 x 0.75 mm²

Electrical connection - socket

Connector: 1 x 7/8", straight; Moulded body: PUR; Locking: diecast zinc; Contacts: gold-plated



Connection

