UGT517

Ultrasonic sensor

UGA01600F2KG/US

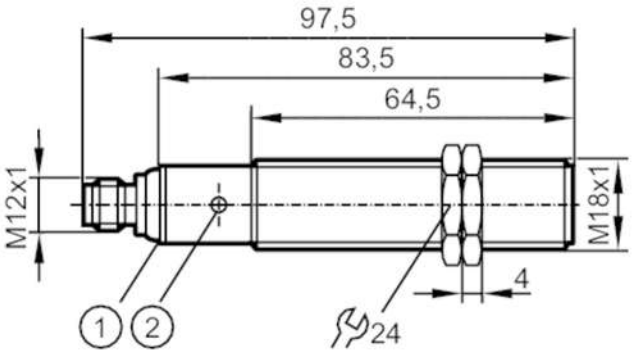

1 LEDs
2 teach button

Product characteristics		
Electrical design		NPN
Output function		normally open / normally closed; (parameterisable)
Sensing range	[mm]	150...1600; (Target: 200 x 200 mm)
Housing		threaded type
Dimensions	[mm]	M18 x 1 / L = 97.5
Electrical data		
Operating voltage	[V]	10...30 DC; ("supply class 2" to cULus)
Current consumption	[mA]	55
Protection class		III
Reverse polarity protection		yes
Power-on delay time	[s]	< 0.3
Converter frequency	[kHz]	230
Inputs / outputs		
Number of inputs and outputs		Number of digital outputs: 1; Number of analogue outputs: 1
Outputs		
Total number of outputs		2
Output signal		switching signal; analogue signal
Electrical design		NPN
Number of digital outputs		1
Output function		normally open / normally closed; (parameterisable)
Max. voltage drop switching output DC	[V]	2.2
Permanent current rating of switching output DC	[mA]	100
Switching frequency DC	[Hz]	3
Number of analogue outputs		1
Analogue voltage output	[V]	0...10
Min. load resistance	[Ω]	3000
Short-circuit protection		yes
Overload protection		yes

UGT517

Ultrasonic sensor

UGA01600F2KG/US

Resolution of analogue output		< 3 mm	
Detection zone			
Sensing range	[mm]	150...1600; (Target: 200 x 200 mm)	
Blind zone	[mm]	150	
Angle of aperture cylindrical	[°]	15; (±2)	
Max. deviation from the 90° angle sensor/object	[°]	± 4	
Accuracy / deviations			
Temperature compensation		yes	
Hysteresis	[%]	< 2	
Switch point drift	[%]	-2...2	
Linearity error of analogue output	[%]	<2	
Repeatability		1 %	
Notes on the accuracy / deviation		The indicated values are reached after a warm-up time of min. 20 minutes	
Response times			
Response time	[ms]	< 300; (analogue output)	
Operating conditions			
Ambient temperature	[°C]	-20...70	
Storage temperature	[°C]	-30...80	
Protection		IP 67	
Tests / approvals			
EMC		EN 61000-4-2 ESD	4 kV CD / 8 kV AD
		EN 61000-4-3 HF radiated	3 V/m
		EN 61000-4-4 Burst	2 kV
		EN 61000-4-6 HF conducted	3 V
		EN 55011	Class A
Vibration resistance		EN 60068-2-6 Fc	(10-55) Hz 1 mm amplitude, oscillation period 5 min., 30 min. per axis at resonance or 55 Hz
Shock resistance		EN 60068-2-27 Ea	30 g 11 ms half-sine; 3 shocks each in every direction of the 3 coordinate axes
MTTF	[years]	125	
UL approval		Ta	-20...70 °C
		power supply	Class 2
		File number UL	E174191
Mechanical data			
Weight	[g]	101.5	
Housing		threaded type	
Dimensions	[mm]	M18 x 1 / L = 97.5	
Thread designation		M18 x 1	
Materials		stainless steel (316L/1.4404); PA; epoxy glass ceramics	
Tightening torque	[Nm]	50	

UGT517

Ultrasonic sensor

UGA01600F2KG/US

Displays / operating elements		
Display	switching status	2 x LED, yellow
	echo	1 x LED, green
Teach function	yes	
Accessories		
Items supplied	lock nuts: 2, stainless steel	
Remarks		
Remarks	operating voltage "supply class 2" according to cULus	
Pack quantity	1 pcs.	
Electrical connection		

Connector: 1 x M12; coding: A



Connection

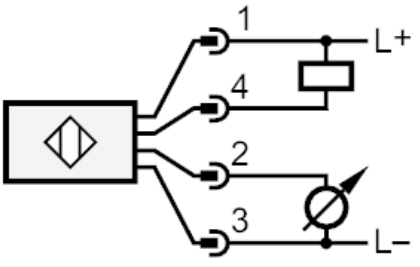

UGT517

Ultrasonic sensor

UGA01600F2KG/US

Diagrams and graphs

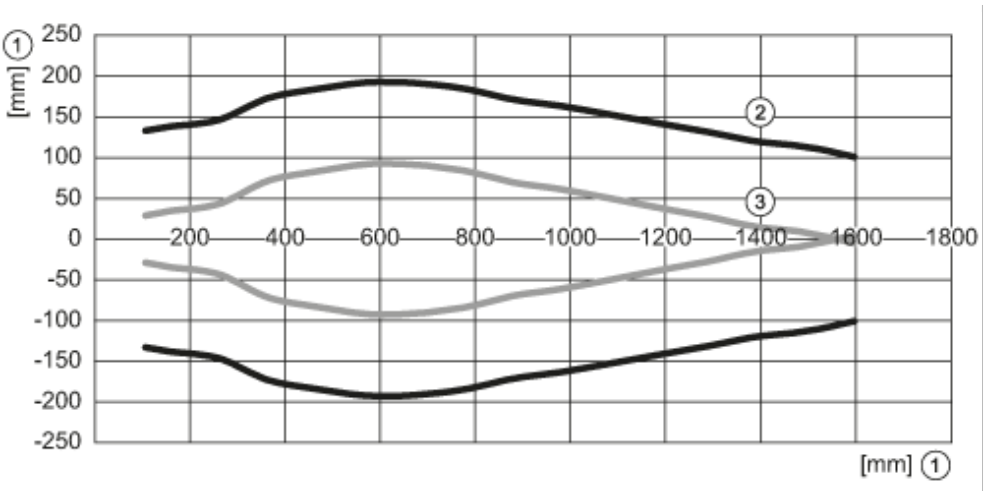

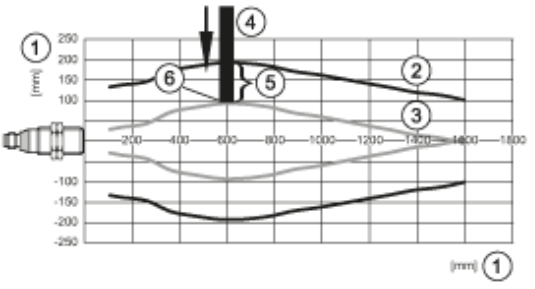

1: distance

2: Detection zone

3: switch-on/switch-off graph

4: Target 200 x 200 mm

5: 50% of the target in the detection zone

6: switch point