

TECHNICAL OVERVIEW

U7108A/B/C and U7110A/B/C Multiport Electromechanical Coaxial Switches

SP8T/SP10T, DC to 9/20/26.5 GHz

Key Features

- Single-pole-eight-throw (SP8T) and single-pole-ten-throw (SP10T) configuration, latching, terminated
- Extend the number of test ports for multi-DUT or multiport devices measurement
- Achieve lower cost-per-port test without compromising performance
- Superior isolation, 63 dB minimum at 26.5 GHz and low VSWR
- Opto-electronics indicator and current interrupt
- TTL/5V CMOS compatible (optional)

Description

The Keysight U7108A/B/C SP8T and U7110A/B/C SP10T EM multiport switches provide the performance, reliability and higher density switches required for multi-DUTs or multi-channel DUTs testing applications. They are suitable for automated test and measurement, signal monitoring, and routing applications. Innovative and rigorous design with stringent manufacturing specifications testing allows the switches to meet the requirements for highly repeatable switching elements in test instruments and switching interfaces.

Operating up to 26.5 GHz these switches exhibit exceptional isolation performance required to maintain measurement integrity. Isolation between ports is typically > 63 dB to 26.5 GHz. This reduces the influence of signals from other channels, sustains the integrity of the measured signal, and reduces system measurement uncertainties. These switches also minimize measurement uncertainty with low insertion loss and reflection, which make them ideal elements in large multi-tiered switching systems.

KEYSIGHT TECHNOLOGIES

The DC connectivity comes with a ribbon cable or optional solder terminal connections accommodate the need for secure and efficient control cable attachment. Option 100 provides solder terminal connections in place of the 24-pin ribbon drive cable.

Both switches series include opto-electronic current interrupts. These switches have an interrupt circuit that provides logic to open all but the selected ports, and then close the selected paths. All other paths are terminated with 50-ohm loads and the current to all the solenoids is then cut off. These versions also offer independent indicators that are controlled by optical interrupts in the switch. The indicators provide a closed path between the indicator common pin and the corresponding sense pin of the selected path. TTL/5V CMOS compatible drive is available as a selectable option.

Applications

Multiport switches find use in a large number of applications, increasing system flexibility and simplifying system design.

Simple signal routing

The simplest signal routing scheme takes the form of single input to multiple outputs. These matrices are often used on the front of an analyzer in order to test several two-port devices sequentially or for testing multiport devices. In surveillance applications, a multiport switch can be used for selecting the optimum antenna in order to intercept a signal. Two methods can be used to accomplish the single input to multiple output arrangement. Traditionally a tree matrix composed of SPDT switches was used to configure a multiport testing requirement. While this gave great isolation, it was at the cost of more switches. The U7108x and U7110x switches have port-to-port isolations typically greater than 63 dB at 26.5 GHz, eliminating the need to use a tree matrix in order to achieve high isolation. In addition to the reduced part count, the path lengths are shorter, so insertion loss is less, and paths are of equal length, so phase shift is constant.

Full access switching

Full access switching systems give the flexibility to route multiple input signals to multiple outputs simultaneously. Full access switching matrices find use in generic test systems; they provide flexible routing of signals to and from many different devices under test and stimulus and analysis instrumentation. Cross-point matrices, using single-pole double-throw (SPDT) and cross-point switches, have traditionally been used in order to maintain high channel-to-channel isolation. As with the tree matrices, it is at the cost of more hardware and performance. Full access switching can also be achieved using multiport switches. The advantage of the multiport matrix over the cross-point matrix is lower insertion loss and improved SWR performance due to consistent path length and fewer switches and connecting cables.

Dedicated switching

There are several applications where switching is used, not for flexibility, but to accomplish a function within an instrument. For example, switched filter banks for reducing harmonics in the output of sources or to the input of analyzers can use multiport switches in series to select the right filter for the band of interest. For larger switching systems, where many switches will be used to provide complex signal routing, a switch driver such as the Keysight 11713D/E with U7108x and U7110x switches is recommended. Driving the switch, each RF path can be closed by applying ground (TTL “High” for Option 300/500) to the corresponding “drive” pin. In general, all other RF paths are simultaneously opened by internal logic.

Driving the Switch

Each RF path can be closed by applying ground (TTL “High” for option 300 and 500) to the corresponding “drive” pin. In general, all other RF paths are simultaneously opened by internal logic.

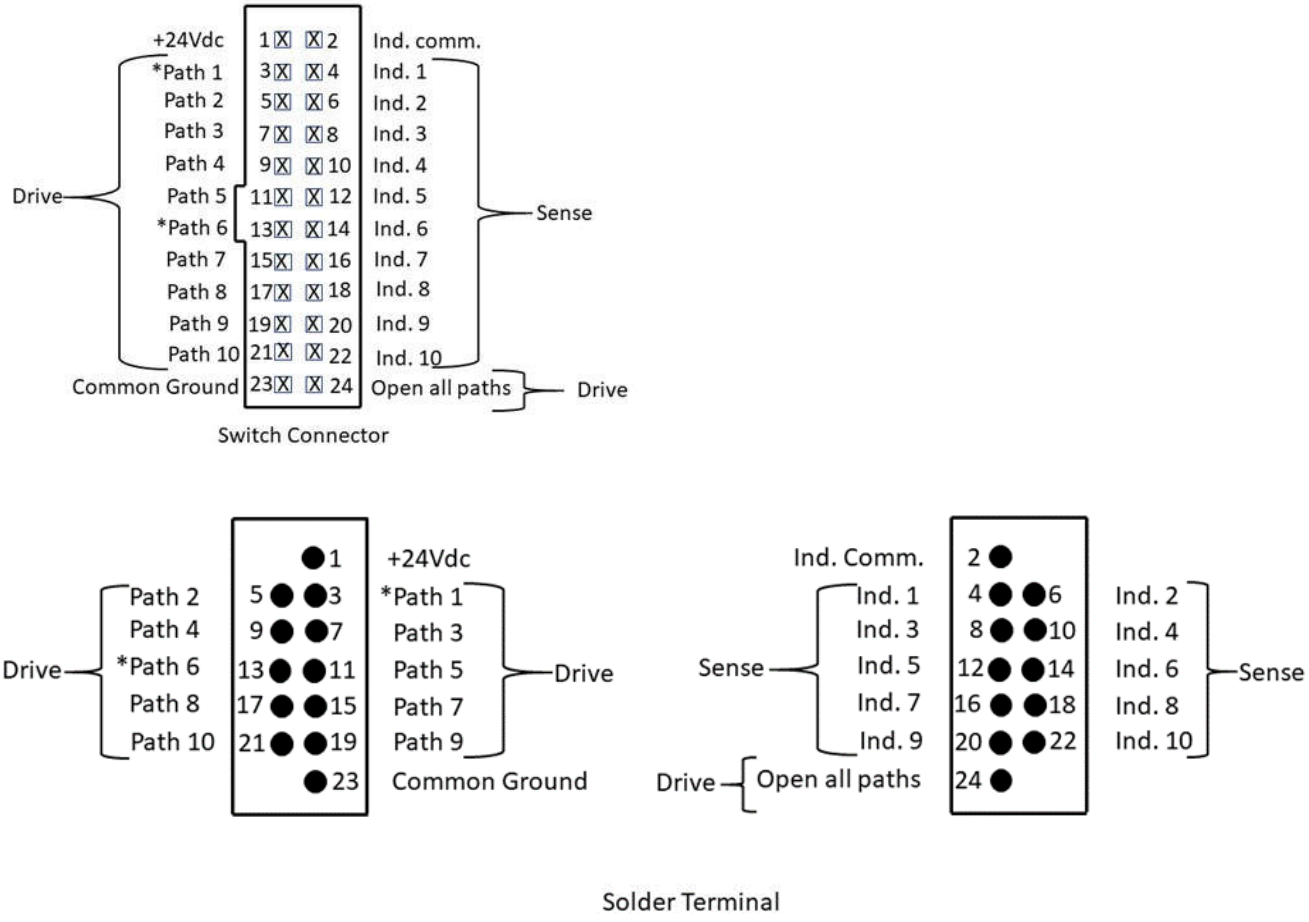

*Paths 1 and 6 are not connected for U7108A/B/C switches model

Figure 1. Drive connection diagrams for U7108x and U7110x

The default operation of the switches is break-before-make. Make-before-break switching can be accomplished by simultaneously selecting the “drive” pins for old RF path and new RF path. Once the new RF path is closed (20 ms), de-select the old RF path “drive” pin while leaving the new RF path “drive” pin selected. The switch circuitry will automatically open the old RF path while leaving the new RF path engaged.

Standard drive (Option 200 and Option 400)

- Connect pin 1 to supply voltage (24 Vdc) and pin 23 to ground
- Select (close) desired RF path by applying ground to the corresponding “drive” pin; for example, ground pin 3 to close RF path 1.
- To select another RF path, ensure that all unwanted RF path “drive” pins are disconnected from ground (to prevent multiple RF path engagement). Ground the “drive” pin which corresponds to the desired RF path.
- To open all RF paths, ensure that all RF path “drive” pins are disconnected from ground. Then, connect pin 24 to ground.

Note:

- Pin 23 must always be connected to ground to enable electronic position-indicating circuitry and drive logic circuity. If pin 23 is not connected to ground, catastrophic failure will occur
- After the RF path is switched and latched, the drive current is interrupted by the electronic position-sensing circuitry. Pulsed control is not necessary, but if implemented, the pulse width must be 20 ms minimum to ensure the switch is fully latched

TTL drive (Option 300 and Option 500)

- Connect pin 1 to supply voltage (24 Vdc) and pin 23 to ground.
- Select (close) desired RF path by applying ground to the corresponding “drive” pin; for example, apply TTL “High” to pin 3 to close RF path 1.
- To select another RF path, ensure that all unwanted RF path “drive” pins are at TTL “Low” (to prevent multiple RF path engagement). Apply TTL “High” to the “drive” pin which corresponds to the desired RF path.
- To open all RF paths, ensure that all RF path drive” pins are at TTL “Low”. Then, apply TTL “High” to pin.

Note:

- Pin 23 must always be connected to ground to enable the electronic position-indicating circuitry and drive logic circuitry. In addition to the quiescent current supplying the electronic position-sensing circuitry, the drive current flows out of pin 23 (during switching) on TTL drive switches (option 300 and option 500).
- If pin 23 is not connected to power supply ground, catastrophic failure will occur.
- After the RF path is switched and latched, the drive current is interrupted by the electronic position-sensing circuitry. Pulsed control is not necessary, but if implemented, the pulse width must be 20 ms minimum to ensure the switch is fully latched.

Electronic Position Indicator

The electronic position indicators consist of optically isolated, solid state relays which are driven by photo-electric sensors coupled to the mechanical position of the RF path’s moving elements (see Figure 2). The circuitry consists of a common which can be connected to an output corresponding to each RF path. If multiple RF paths are engaged, the position indicator corresponding to each closed RF path will be connected to common. The solid-state relays are configured for AC and/or DC operation. The electronic position indicators require that the supply (24 Vdc) be connected to pin 1 and ground connected to pin 23.

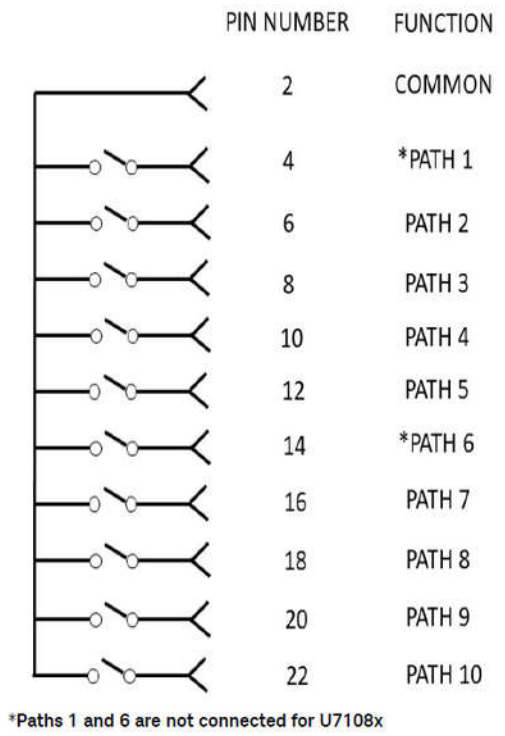

Figure 2. Pin configuration for indicator function

Specifications

Specifications describe the instrument's warranted performance. Supplemental and typical characteristics are intended to provide information useful in applying the instrument by giving typical, but not warranted performance parameters. U7108/10x specifications are tested at nominal voltage at 25 °C.

U7108x and U7110x Multiport Electromechanical Switches

Specification	U7108A & U7110A	U7108B & U7110B	U7108C & U7110C
Operating Frequency	DC to 9 GHz	DC to 20 GHz	DC to 26.5 GHz
Configuration	SP8T & SP10T		
Isolation (dB), minimum	DC to 3 GHz: 70 dB 3 to 9 GHz: 63 dB	DC to 3 GHz: 70 dB 3 to 20 GHz: 63 dB	DC to 3 GHz: 70 dB 3 to 26.5 GHz: 63 dB
Insertion loss (dB)	0.35 + 0.025 x frequency (GHz)		
Return loss (VSWR), maximum	DC to 4 GHz: 20.8 dB (1.20) 4 to 9 GHz: 17.7 dB (1.30)	DC to 4 GHz: 20.8 dB (1.20) 4 to 9 GHz: 17.7 dB (1.30) 9 to 16 GHz: 14.7 dB (1.45) 16 to 20 GHz: 13.3 dB (1.55)	DC to 4 GHz: 20.8 dB (1.20) 4 to 9 GHz: 17.7 dB (1.30) 9 to 16 GHz: 14.7 dB (1.45) 16 to 24 GHz: 13.3 dB (1.55) 24 to 26.5 GHz: 12.0 dB (1.67)
Switching time, maximum	20 ms		

Typical Specifications Plots

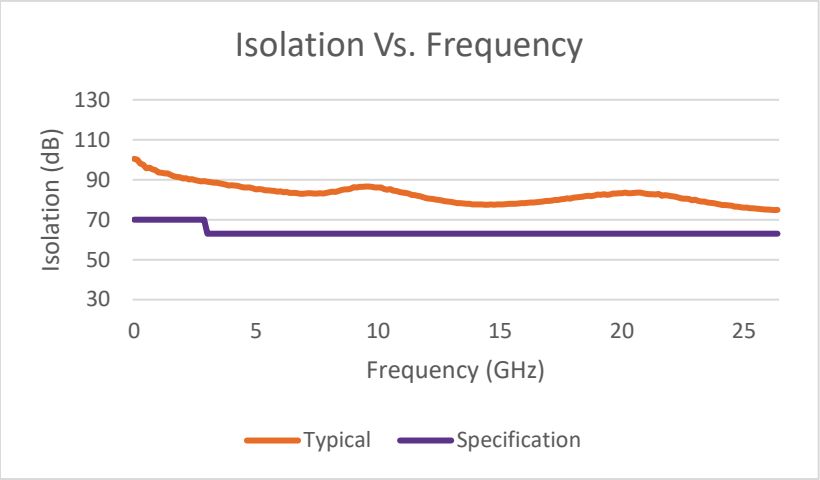

Figure 3. Isolation versus frequency typical plot

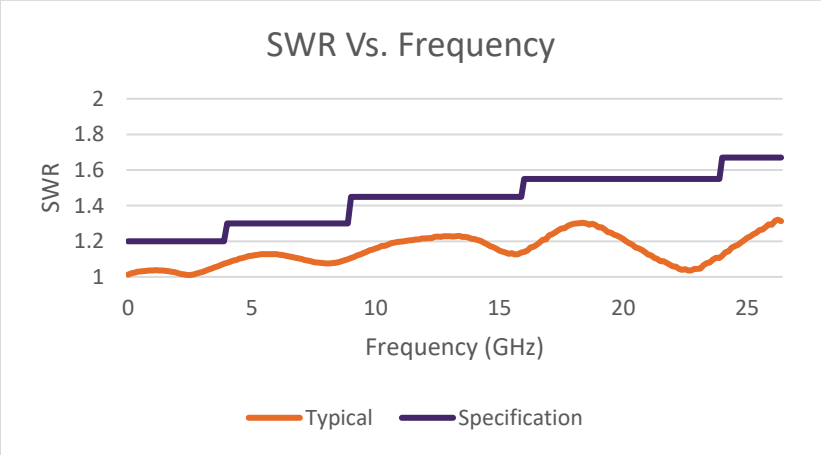

Figure 4. SWR versus frequency typical plot

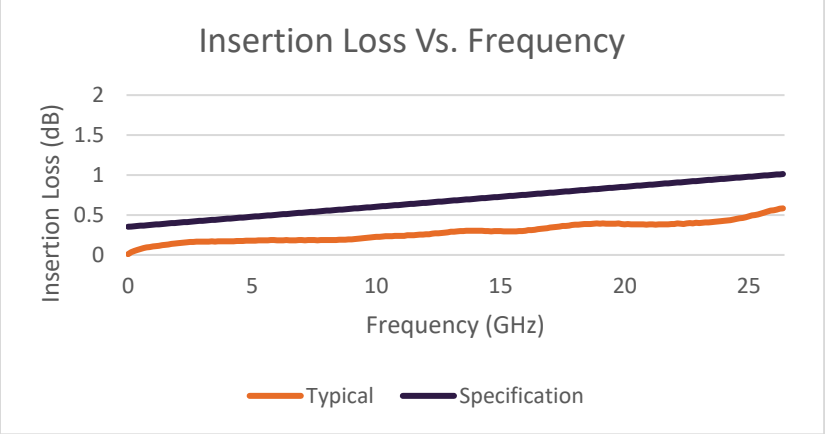

Figure 5. Insertion loss versus frequency typical plot

U7108x and U7110x Multiport Electromechanical Switches Supplemental Specification and Characteristics

Supplemental characteristics are intended to provide useful information. They are typical but non-warranted performance parameters

Specification	U7108/10A/B/C
Maximum power rating into 50 Ω internal termination (un-use port)	1 W CW 50 W peak, 10 µs max pulse width, not to exceed 1 W average
Maximum power rating into through path, hot switching	2 W CW 100 W peak, 10 µs max pulse width, not to exceed 2 W average
Life cycles	1 million
RF connector	SMA (f)

Switch Drive and Indicator Specifications

Specifications describe the instrument's warranted performance. Supplemental and typical characteristics are intended to provide information useful in applying the instrument by giving typical, but not warranted performance parameters

Parameters	Minimum	Nominal	Maximum
Supply voltage, Vcc			
Option 200/300/400/500	20 V	24 V	32 V
Supply current, Icc (switching pulse width ≥ 20ms Vcc = 24 VDC[1]			
Option 200/300/400/500		200 mA[1]	
Supply current (quiescent)			
Option 200/300/400/500	50mA		100 mA
Option 300/500			
High level input	3 V		7 V
Low level input			0.8 V
Maximum high input current Vcc = Max Vinput = 3.85 VDC		1 mA	1.4 mA

[1] Closing one RF path requires 200 mA. Add 200 mA for each additional RF path closed or opened. Using all RF path requires 200 mA per RF path reset with Vcc = 24 VDC

Indicator Specifications

Specification	U7108/10A/B/C
Maximum withstand voltage	60 V
Maximum current capacity	150 mA
Maximum “ON” resistance	5 Ω
Maximum “OFF” resistance	10 G Ω

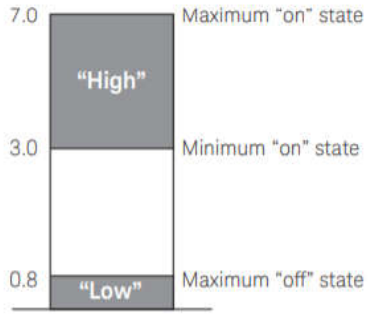

Figure 6. TTL control voltages states (Option 300 and 500)

Environmental Specifications

Keysight U7108x and U7110x multiport electromechanical switches are designed to fully comply with Keysight Technologies’ product operating environmental specifications. The following table summarizes the environmental specifications for these products.

Environmental specifications	Description
Temperature	
Operating	-25 °C to +55 °C
Non-operating	-55 °C to +85 °C
Cycling	-55 °C to +85 °C, 10 cycles per MIL-STD-202F
Humidity	
Operating	95% RH at 40 °C
Resistance	85% RH at 85 °C, 10 days per JEDEC HAST standard
Shock	
End-user handling	Delta V: 3 m/s ±5%, Duration <3ms at 6 faces
Transportation	50G, Delta V: 8m/s ±10% at 6 faces
Mechanical survival	Half sine: 500G, 0.5 ms at 6 faces
Vibration	
Operating	Random: 0.3 Grms, 5-500 Hz
Survival	Random: 7 Grms, 50 to 2000 Hz
Altitude	
Operating	< 4,600 meters (15,092 feet)
Non-operating	< 15,300 meters (50,197 feet)

Mechanical Information

Dimensions are in mm (inches) nominal, unless otherwise specified

Model Number	Weight
U7108A/B/C	320 grams (0.705 lbs)
U7110A/B/C	325 grams (0.716 lbs)

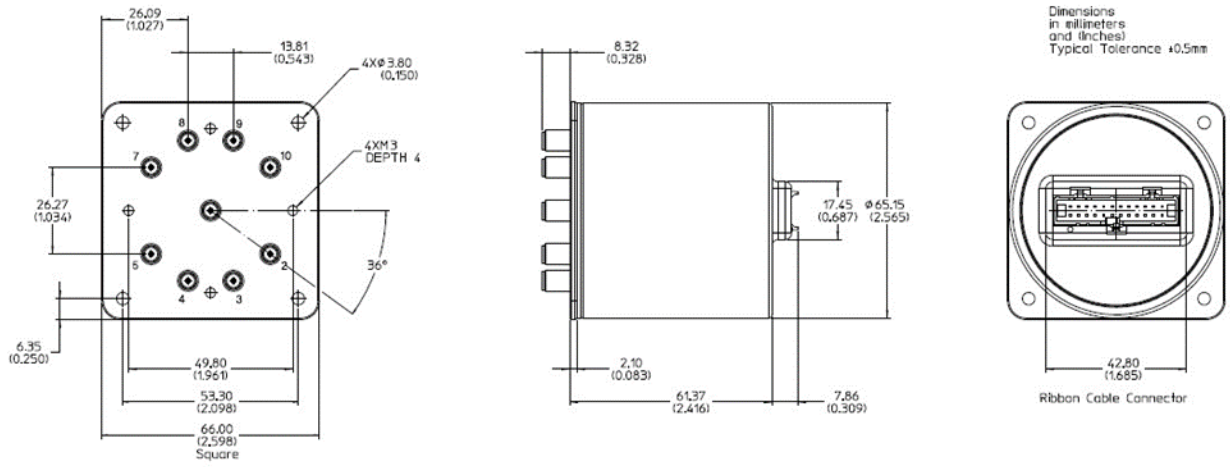

Figure 7. U7108A/B/C mechanical dimension (options 200 and 300) – 24-pin DIP connector

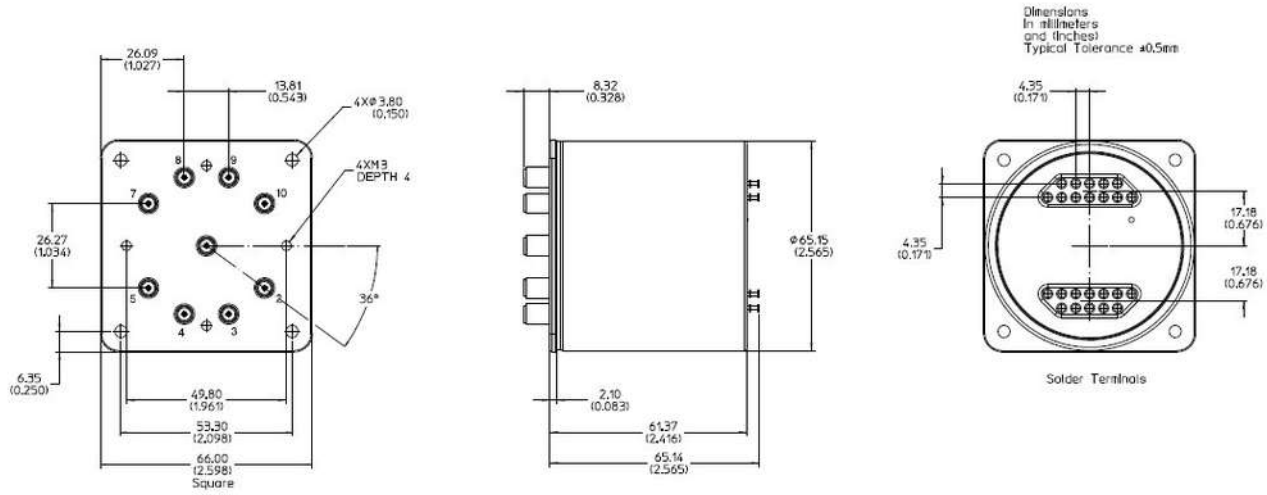

Figure 8. U7108A/B/C mechanical dimension (options 400 and 500) – solder terminal

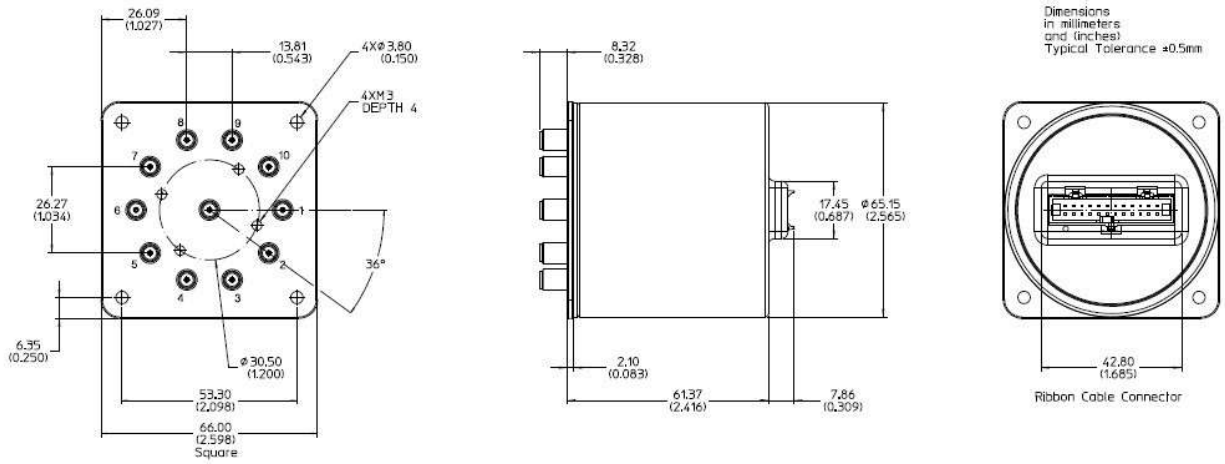

Figure 9. U7110A/B/C mechanical dimension (options 200 and 300) – 24-pin DIP connector

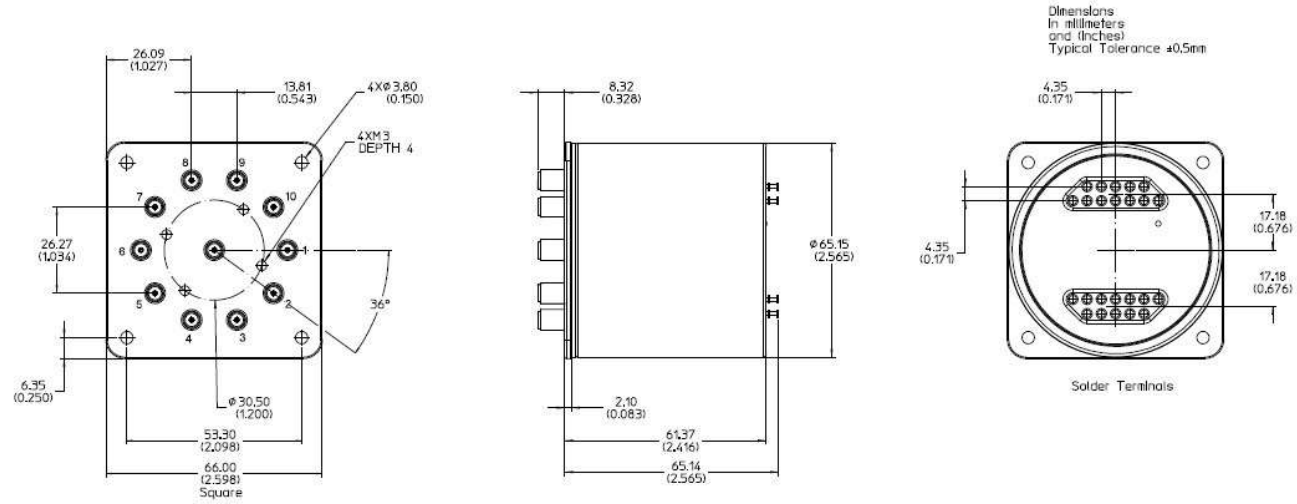

Figure 10. U7110A/B/C mechanical dimension (options 400 and 500) – solder terminal

Ordering Information

Description	
U7108A	Multiport electromechanical switch, SP8T, DC to 9 GHz, Terminated
U7108B	Multiport electromechanical switch, SP8T, DC to 20 GHz, Terminated
U7108C	Multiport electromechanical switch, SP8T, DC to 26.5 GHz, Terminated
U7110A	Multiport electromechanical switch, SP10T, DC to 9 GHz, Terminated
U7110B	Multiport electromechanical switch, SP10T, DC to 20 GHz, Terminated
U7110C	Multiport electromechanical switch, SP10T, DC to 26.5 GHz, Terminated
Option 200	Standard 24 VDC and 24-PIN DIP DC connector with 24-inch ribbon cable, bare wire
Option 300	TTL 24 VDC and 24-PIN DIP DC connector with 24-inch ribbon cable, bare wire
Option 400	Standard 24 VDC and Solder Terminals
Option 500	TTL 24 VDC and Solder Terminals
Option UK6	Commercial calibration certificate with test data

Related Products & Literatures

11713D/E Attenuator/Switch Driver Configuration Guide, 3120-1217EN

Web Link

www.keysight.com/find/switches

www.keysight.com/find/11713

More RF & microwave test accessories

For selection of more than 300 models of various type of RF and microwave test accessories with operating frequency up to 110 GHz. Go to: www.keysight.com/find/mta

Learn more at: www.keysight.com

For more information on Keysight Technologies' products, applications or services, please contact your local Keysight office. The complete list is available at: www.keysight.com/find/contactus

KEYSIGHT TECHNOLOGIES

This information is subject to change without notice. © Keysight Technologies, 2020 - 2021, Published in USA, April 1, 2021, 3120-1472.EN