Metal Equipment Housings

Stock No.	W	D	H
222-109	185	180	65
222-115	260	250	90
222-121	350	250	110
818-621	216	300	134.5
818-637	367	300	134.5
818-643	474	300	134.5

Figure 1. Exploded view of case

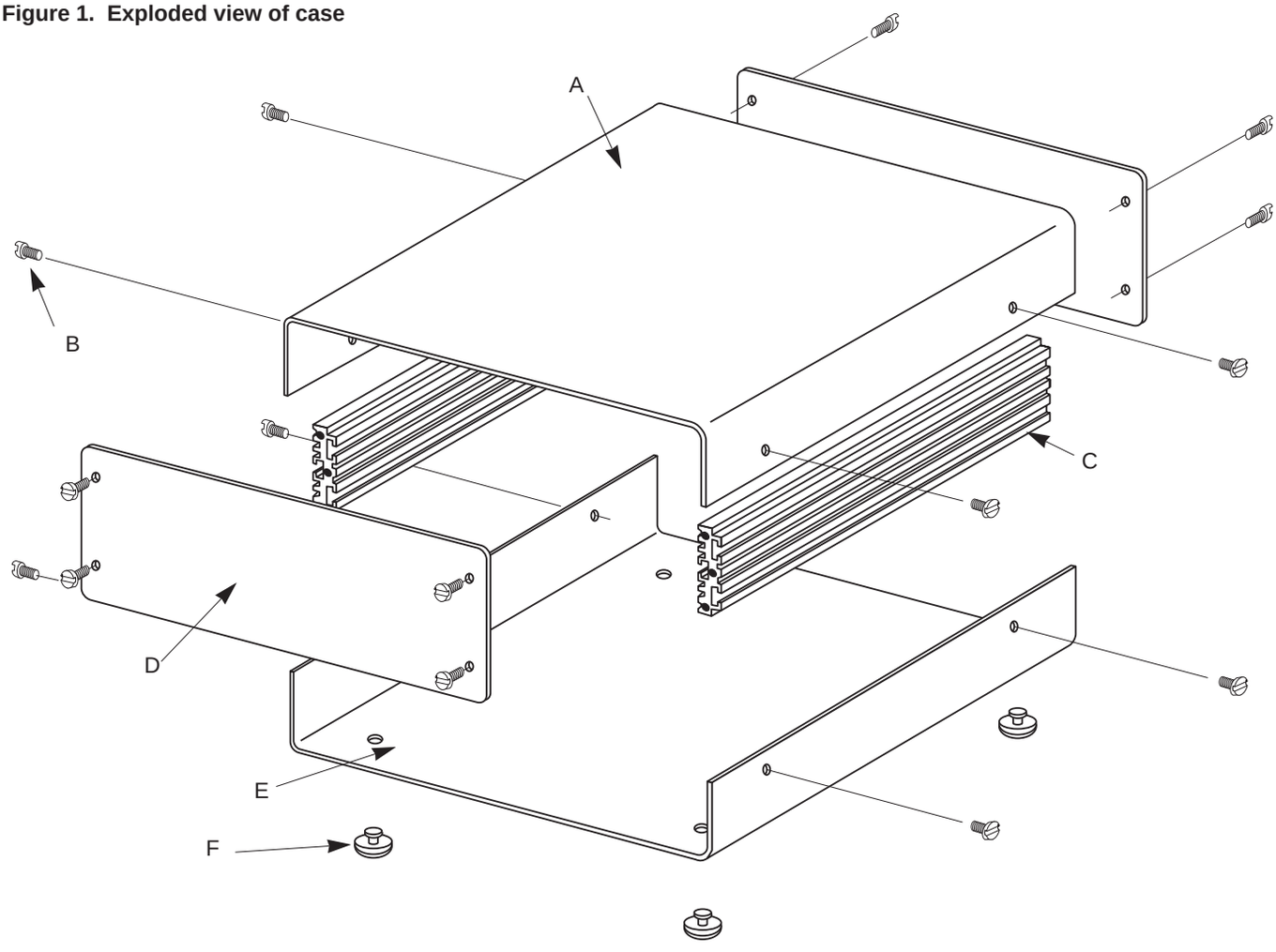

A. Case top
B. Fixing screw
C. Internal extrusion
D. Front/rear panel
E. Case Bottom
F. Rubber foot

Case contents:

Case top
Case bottom
2 internal extrusions
2 front/rear panels
4 rubber feet
16 M3 x 6 screws
8 M3 captive nuts

Case assembly (refer to figure 1)

1. Insert four rubber feet into case bottom.
2. Insert eight M3 captive nuts into the two internal extrusions.
3. Secure the two internal extrusions to the case bottom using four of the M3 x 6 screws (fastening to the captive nuts).
4. Secure the case top to the internal extrusion as per step 3.
5. Secure the front and rear aluminium panels using the remaining M3 x 6 screws (fastening to the front/rear of the internal extrusions).
   The case is now ready for use.