E40048

Mounting clamp for airflow monitors

MOUNTING CLAMP SLG

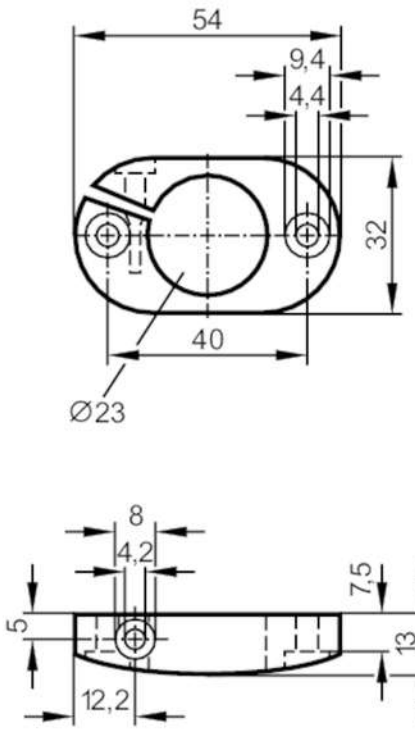

Application		
Design		for SLG airflow monitor
Mechanical data		
Weight	[g]	16
Dimensions	[mm]	13 x 54 x 32
Inside diameter	[mm]	23
Materials		PBT
Remarks		
Pack quantity		1 pcs.