BFC150T4A230

CHANGEOVER ASSEMBLY, AC COIL, SIDE MOUNT MECHANICAL INTERLOCK WITH 2NC CONTACTS, 165A AC1 IN AC. COIL VOLTAGE 230VAC 50/60HZ



Product designation			Changeover contactor assemblies
Product type designation			BFC
Electrical features			
Maximum operating current (≤440V)		A	165
Contact characteristics			
Operational current Ie			
	AC-1 (≤40°C)	A	165
	AC-1 (≤55°C)	A	135
	AC-1 (≤60°C)	A	118
Mechanical features			
Terminals type			Screw
Fixing			Side mount
Weight		g	4892

Dimensions

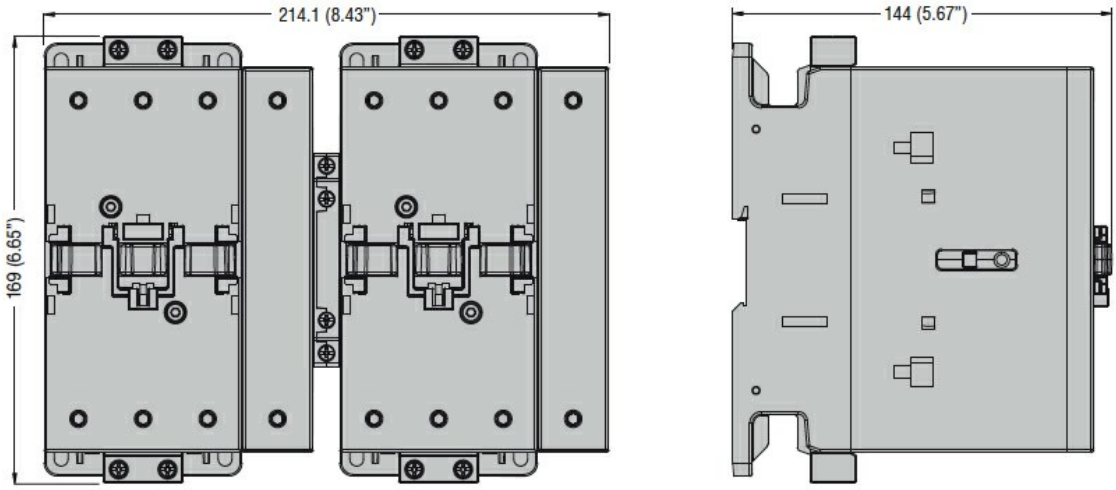

Wiring diagrams

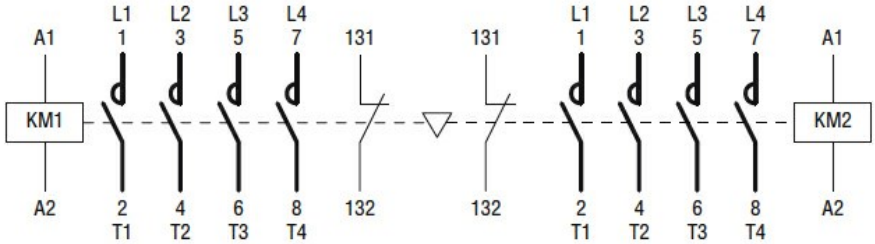

ETIM classification

ETIM 8.0	EC000010 - Combination of contactors

The characteristics described in this document are subject to updates or modifications at any time. The descriptions, technical and functional information, illustrations and instructions in this brochure are purely illustrative, and are consequently not contractually binding