IKO

CAM FOLLOWERS

Thrust Disk Type Miniature Cam Followers With Cage/With Hexagon Hole

Full Complement Type/With Hexagon Hole



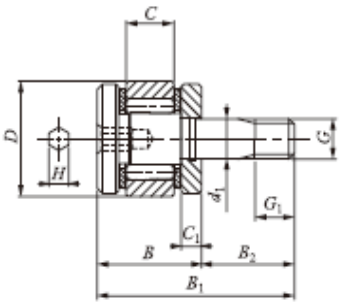

CFS1.4 WV

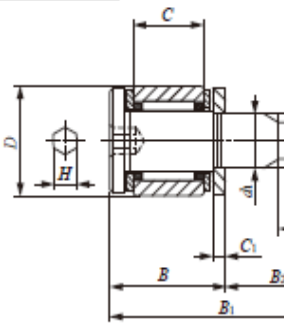

CFS··· W

RS Part Number	IKO Part Number	Stud Diameter (mm)	Mass (g)	D	C	d1	G	G1	B	B1
1251216	CFS 1.4 WV	1.4	0.35	4	1.7	1.4	M1.4x0.3	1.4	3.7	7
1251217	CFS 2W	2	0.6	4.5	2.5	2	M2x0.4	2	4.5	8.5
1251218	CFS 2.5W	2.5	1	5	3	2.5	M2.5x0.45	2.5	5	10
1251219	CFS 3W	3	2	6	4	3	M3x0.5	3	6.5	12.5

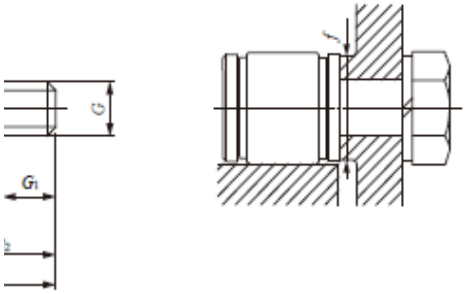

B2	C1	H	Mounting dimension ∫min (mm)	Maximum tightening torque (Nm)	Basic dynamic load rating C (N)	Basic static load rating Co (N)	Maximum allowable static load (N)
3.3	0.7	0.9	3.8	3	481	385	105
4	0.7	0.9	4.3	9.1	288	202	194
5	0.7	0.9	4.8	18.7	428	351	313
6	0.7	1.3	5.8	33.5	629	611	399