E20946

Mounting set for position sensors

SYSTEM COMPONENT CLAMP BOLT

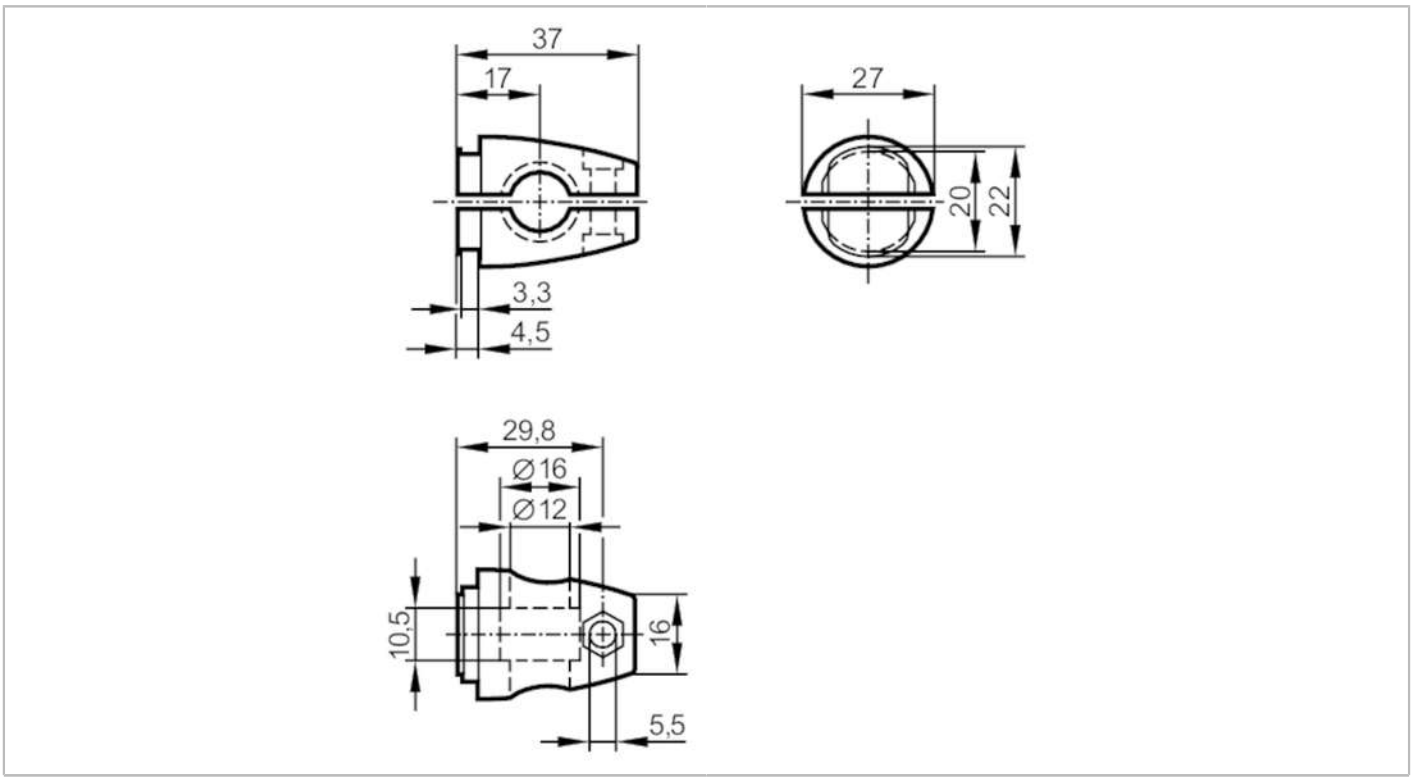

Mechanical data		
Weight	[g]	146
Type of mounting		free-standing; (M10)
Dimensions	[mm]	27 x 27 x 37
Thread designation		M10
Materials		Clamp: stainless steel (1.4408)
Accessories		
Items supplied		head cap screw: 1 x M10 x 55
Remarks		
Pack quantity		1 pcs.