Accessories
Bellows Coupling
For Solid Shaft Encoders
RCS-15-06-06

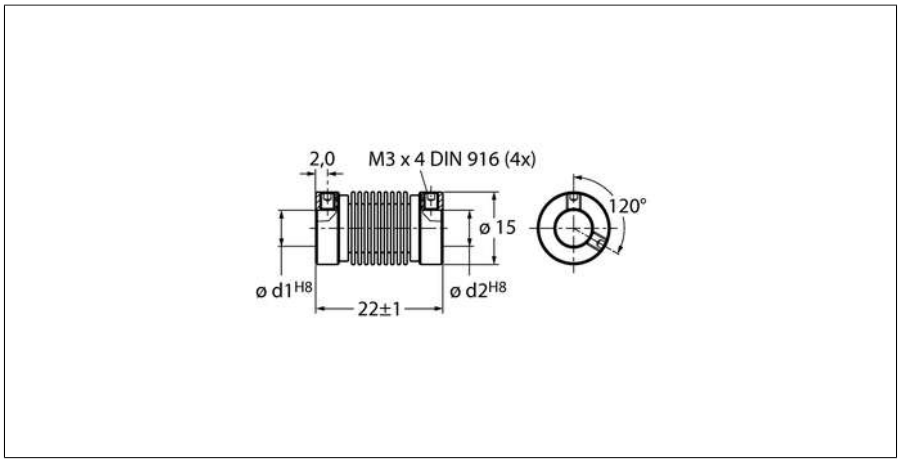

- Bellows coupling Ø 15 mm
- Bore diameter d1 = 6 mm, d2 = 6 mm

Type	RCS-15-06-06
ID	1545362

Edition • 2023-07-20T02:40:01+02:00