P74F - EXCELON® Modular System Soft Start/Dump Valves

- **Port size: 3/8" ... 3/4" (ISO G/PTF)**
- **Assists machine designers in complying with the European Machineries Directive**
- **Excelon design allows in-line installation or modular installation with other Excelon products**
- **Can help existing machinery to comply with PUWER (Provision and Use of Work Equipment Regulations)**
- **Controlled increase of downstream pressure onstart up**
- **High forward flow capacity**
- **High flow dump facility**



Technical features

Medium:
Compressed air only
Operating pressure:
Solenoid actuated:
3 ... 10 bar (44 ... 145 psi)
Pilot actuated:
3 ... 17 bar (44 ... 250 psi)
Snap pressure:
Full flow when downstream pressure reaches 50 – 80% of inletpressure
Charge time:
For 2 litre downstream volume and 6,3 bar (90 psi) inlet pressure
0,2 sec. minimum
110 sec. maximum

Port size:
G3/8, G1/2, G3/4,
3/8 PTF 1/2 PTF , 3/8 PTF
Pilot port:
Rc1/4 with ISO G main ports
1/4 PTF with PTF main ports
Exhaust port:
G1/2 with ISO G main ports
1/2 PTF with PTF main ports
Flow:
57 dm^3/s
Operating pressure: 6,3 bar (91 psi) Δp: 0,5 bar (7 psi)
P1 » P2 = Cv 4,4; P2 » P3 = Cv 5,6

Standard compliances:
II 2G Ex h IIC T6 Gb
II 2D Ex h IIIC T85° Db
Ambient/Media temperature:
Solenoid actuated:
-20° ... +50°C (-4° ... +122°F)
Pilot actuated:
-20° ... +80°C (+4° ... +176°F)
Air supply must be dry enough to avoid ice formation at temperatures below +2°C (+35°F).

Materials:
Body & intermediate body: Aluminium
Elastomers: Synthetic materials
Filter discs: Sintered plastic
Internal components: Brass/steel
Top plate & exhaust bonnet: Zinc

Electrical details for solenoid operators

Voltage tolerance	± 10%
Rating	100% continuous duty
Inlet orifice	1,0 mm
Electrical connection	Industrial Standard, 22 mm
Solenoid coil mounting	Four positions x 90°
Protection class	IP 65 (with sealed plug)

Technical data - standard models

Symbol	Port size	Size	Actuation/ return	Voltage	Pilot port	Weight (kg)	Typ
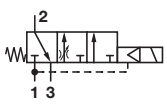	G3⁄8	—	Solenoid/spring	24 V d.c.	-	1,08	P74F-3GC-PFA *1)
	G1⁄2	Basic	Solenoid/spring	24 V d.c.	-	1,05	P74F-4GC-PFA *1)
	G3⁄4	—	Solenoid/spring	24 V d.c.		1,41	P74F-6GC-PFA *1)
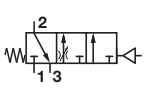	G3⁄8	—	Air/spring	–	M5	1,05	P74F-3GA-NNN
	G1⁄2	Basic	Air/spring	–	M5	1,02	P74F-4GA-NNN
	G3⁄4	—	Air/spring		M5	1,35	P74F-6GA-NNN

*1) To select other solenoid type and coil voltage refer to option selector on page 2

Our policy is one of continued research and development. We therefore reserve the right to amend, without notice, the specifications given in this document. (2000 - 5166d) © 2020 Norgren Ltd.

Voltage codes and spare coils

22 mm coil for connector interface acc. to industrial standard



Voltage	Power Inrush/Hold	Model	Code
12 V d.c.	2 W	QM/48/12J/21	12J
24 V d.c	2 W	QM/48/13J/21	13J
110/120 V 50/60 Hz	4/2,5 VA	QM/48/18J/21	18J
220/240 V 50/60 Hz	6/5,0 VA	QM/48/19J/21	19J

Connector plugs

Industrial standard
22 mm 2-pole + PE



0657868

Option selector

P74F-★★★-★★★

Port size	Substitute
3/8"	3
1/2"	4
3/4"	6
Thread size	**Substitute**
PTF	A
ISO G parallel (standard)	G
Operator	**Substitute**
Air pilot*1)	A
Air pilot with manual lockout slide* 1)	B
22 mm miniature solenoid	C
22 mm miniature solenoid with manual lockout slide	D
CNOMO solenoid	L
CNOMO solenoid with manual lockout slide	M

Connector	Substitute
With	A
Without	N
Coil voltage	**Substitute**
24 V d.c.	F
12 V d.c.	E
220/240 V a.c.	B
110/120 V a.c.	A
No coil	Z
No solenoid	N
Manual override	**Substitute**
Shrouded push button	P
No solenoid	N

*1)To order air pilot models also substitute 'NNN' at digits 8, 9 and 10 e.g. P74F-2GA-NNN.

Flow characteristics

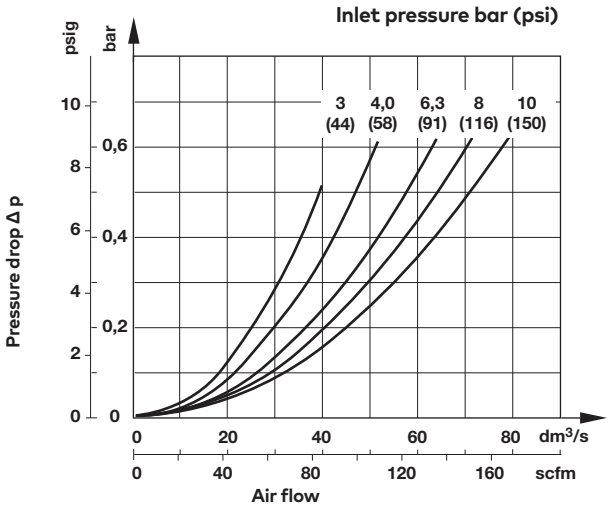

Charge time

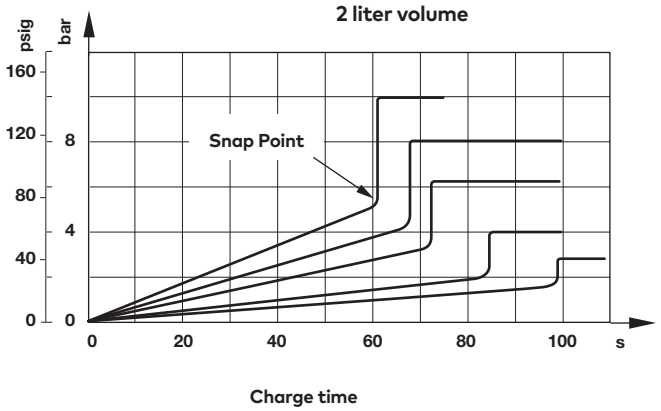

Our policy is one of continued research and development. We therefore reserve the right to amend, without notice, the specifications given in this document. (2000 - 5166d) © 2020 Norgren Ltd.

Accessories

Wall mounting bracket	Quikclamp®	Quikclamp with wall bracket®	Quikmount pipe adaptor *1)	Porting block with three alternative 1/4" ports	2/2 Shut-off valves (for full technical specification see datasheet 8.200.600)	3/2 Shut-off valves (for full technical specification see datasheet 8.200.600)
						
Page 4	Page 4	Page 4	Page 4	Page 4	Page 4	Page 4
4324-50	4314-51	4314-52	G3/8: 4315-10	G1/4: 4316-52	G 3/8: T74B-3GA-P1N	G 3/8: T74T-3GA-P1N
			G1/2: 4315-11	1/4 PTF: 4316-50	G 1/2: T74B-4GA-P1N	G 1/2: T74T-4GA-P1N
			G3/4: 4315-12		G 3/4: T74B-6GA-P1N	G 3/4: T74T-6GA-P1N
			3/8 PTF: 4315-02			
			1/2 PTF: 4315-03			1/2 PTF: T74T-4AA-P1N
			3/4 PTF: 4315-04		3/4 PTF: T74B-6AA-P1N	3/4 PTF: T74T-6AA-P1N

*1) Please use a Quikmount pipe adaptor if the Quikclamp be mounted at inlet or outlet side.

Pressure switch

Porting block for pressure switch	Pressure switch (0,5 ... 8 bar)
	
Page 4	
05231100000000000	08813000000000000

Padlock

Padlock (brass) with two keys *1)

06136330000000000

*1) for shut-off valves

Silencer

Silencer

Page 4
R1/2: MB004B
1/2 NPT: MB004A

Drawings

Dimensions in mm
Projection/First angle



Air pilot actuated

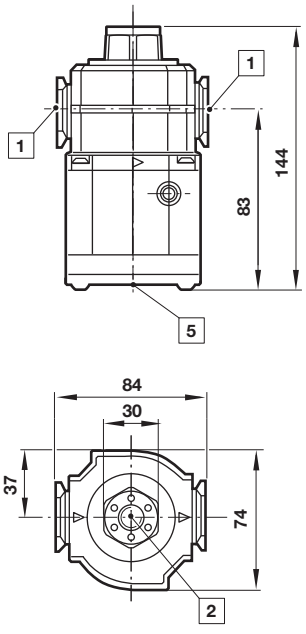

Air actuated plus manual lockput slide

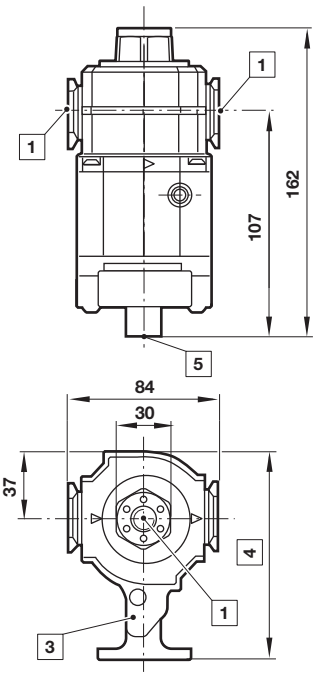

Solenoid actuated

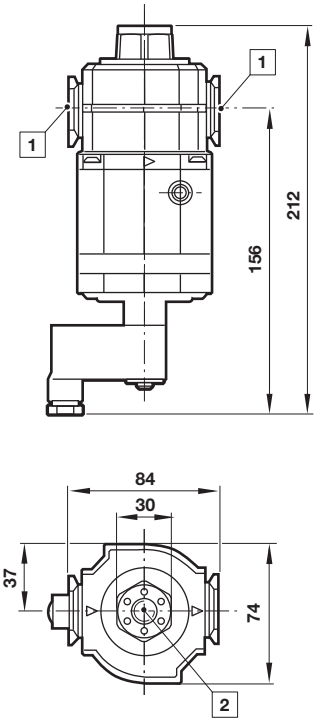

Solenoid actuated plus manual lockput slide

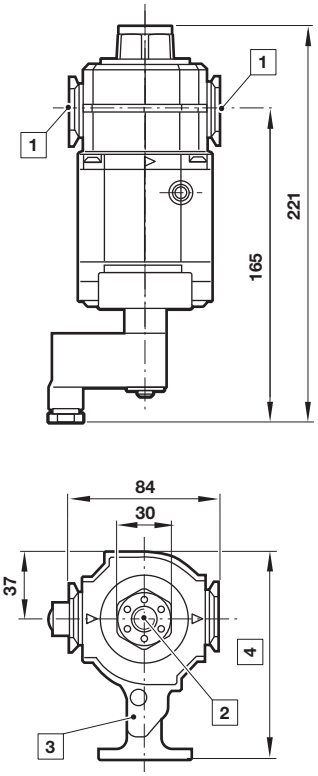

1 Main ports 3/8", 1/2" or 3/4"
2 Pilot port
3 Manual lockout slide
4 Minimum 96 mm; maximum 111 mm
5 Exhaust port

Our policy is one of continued research and development. We therefore reserve the right to amend, without notice, the specifications given in this document. (2000 - 5166d) © 2020 Norgren Ltd.

Accessories

Dimensions in mm
Projection/First angle

Quikclamp®

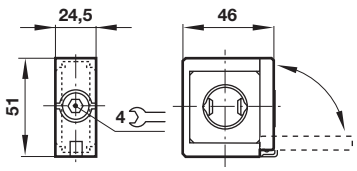

Quikclamp® with wall bracket

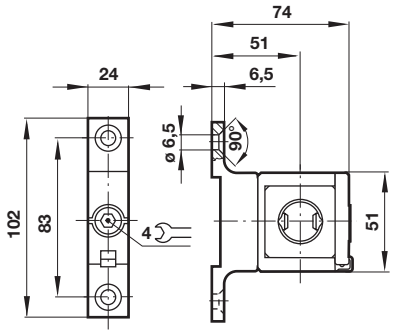

Porting block

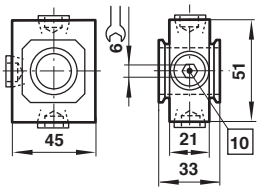

10 Ports 1/4" ISO G/PTF plugged

Pipe adapter

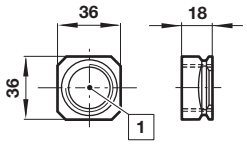

1 Main ports 3/8", 1/2" or 3/4" ISO G/PTF

Wall mounting bracket

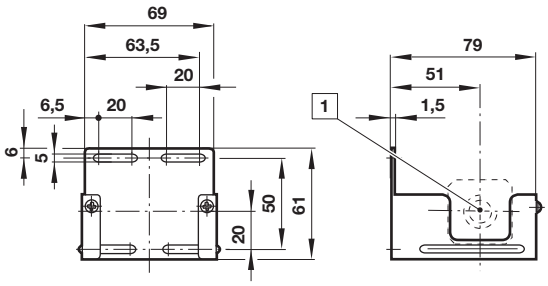

1 Main ports

Shut-off valves

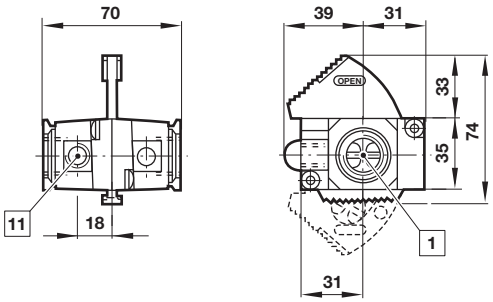

1 Main ports 3/8", 1/2" or 3/4" ISO G/PTF
11 Exhaust port Rc1/8

Porting block for pressure switch

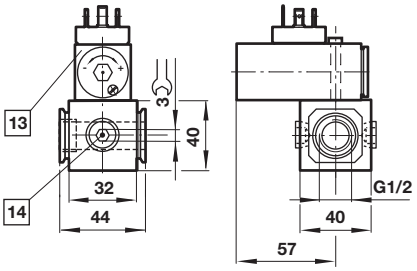

13 Pressure switch is not in scope of delivery
14 Alternative G1/4 ports plugged

Silencer

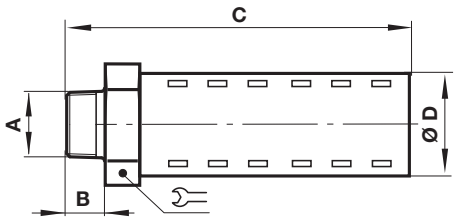

A	B	C	D	⌯	Model
R1/2	17	92	32	32	MB004B
1/2 NPT	17	92	32	32	MB004A

Warning

These products are intended for use in industrial compressed air systems only. Do not use these products where pressures and temperatures can exceed those listed under **»Technical features/ data«**.
Before using these products with fluids other than those specified, for non-industrial applications, life-support systems or other applications not within published specifications, consult Norgren.
Through misuse, age, or malfunction, components used in fluid power systems can fail in various modes.

The system designer is warned to consider the failure modes of all component parts used in fluid power systems and to provide adequate safeguards to prevent personal injury or damage to equipment in the event of such failure.
System designers must provide a warning to end users in the system instructional manual if protection against a failure mode cannot be adequately provided.
System designers and end users are cautioned to review specific warnings found in instruction sheets packed and shipped with these products.

Our policy is one of continued research and development. We therefore reserve the right to amend, without notice, the specifications given in this document. (2000 - 5166d) © 2020 Norgren Ltd.