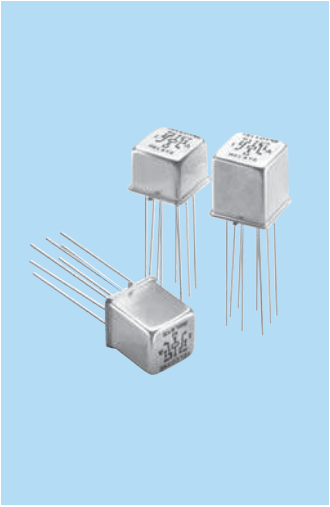

TELEDYNE RELAYS

A Unit of Teledyne Electronics and Communications

HIGH REPEATABILITY BROADBAND CENTIGRID® RELAYS DPDT

SERIES RF100 RF103

SERIES DESIGNATION	RELAY TYPE
RF100	Repeatable, RF, Centigrid® relay
RF103	Sensitive, repeatable, RF, Centigrid® relay

INTERNAL CONSTRUCTION

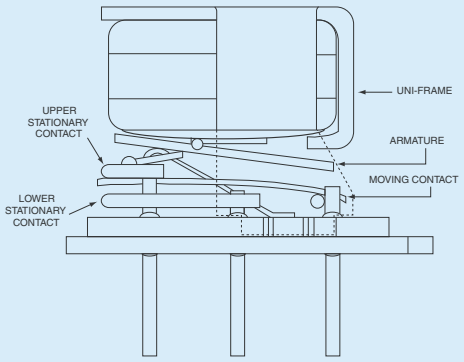

PERFORMANCE FEATURES

The ultraminiature RF100 and RF103 relays are designed to provide improved RF signal repeatability over the frequency range. These relays are highly suitable for use in attenuator and other RF circuits, the RF100 and RF103 feature:

- High repeatability.
- Broader bandwidth.
- Metal enclosure for EMI shielding.
- Ground pin option to improve case grounding.
- High isolation between control and signal paths.
- Highly resistant to ESD.

CONSTRUCTION FEATURES

The following unique construction features and manufacturing techniques provide excellent resistance to environmental extremes and overall high reliability.

- Uni-frame motor design provides high magnetic efficiency and mechanical rigidity.
- Minimum mass components and welded construction provide maximum resistance to shock and vibration.
- Advanced cleaning techniques provide maximum assurance of internal cleanliness.
- Gold-plated precious metal alloy contacts ensure reliable switching.
- Hermetically sealed.
- Solderable leads.

ENVIRONMENTAL AND PHYSICAL SPECIFICATIONS		
Temperature (Ambient)	**Storage**	–65°C to +125°C
	Operating	–55°C to +85°C
Vibration (General Note 1)		10 g's to 500 Hz
Shock (General Note 1)		30 g's, 6 msec, half-sine
Enclosure		Hermetically sealed
Weight	RF100	0.09 oz. (2.55g) max.
	RF103	0.16 oz. (4.5g) max.

SPECIFICATIONS ARE SUBJECT TO CHANGE WITHOUT NOTICE
www.teledynerelays.com

©2003 TELEDYNE RELAYS

SERIES RF100 AND RF103
TYPICAL RF CHARACTERISTICS (See RF Notes)

Isolation Across Contacts (RF Note 4)

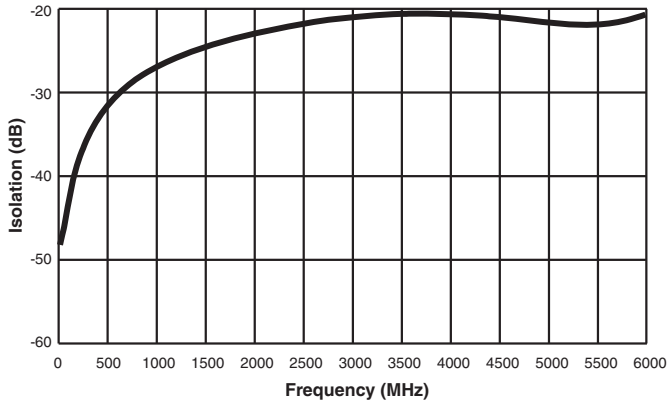

Isolation Pole to Pole (RF Note 5)

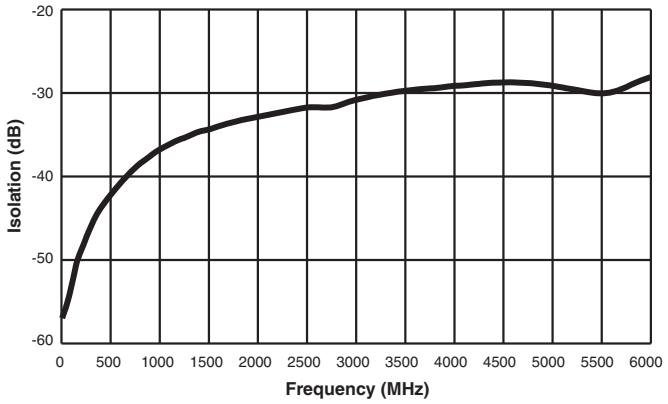

Insertion Loss (RF Note 6)

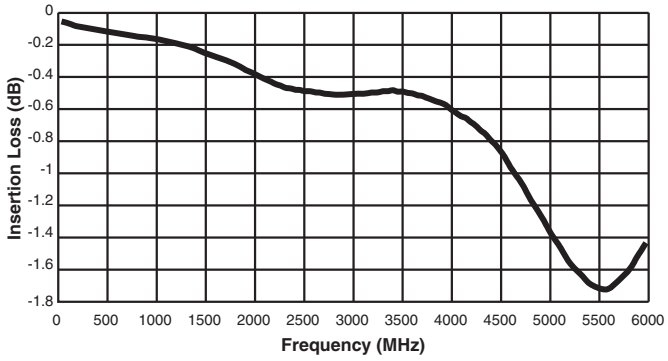

VSWR (RF Note 6)

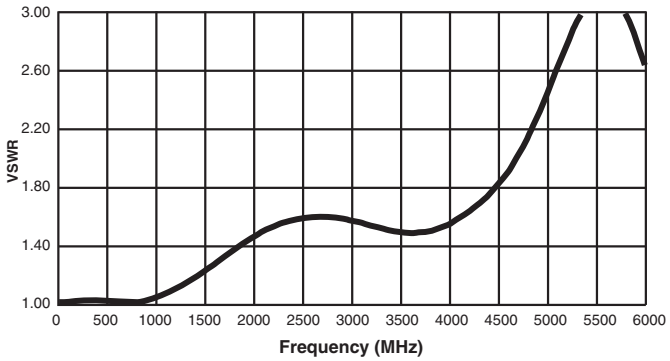

RF100 Time Response (RF Note 6)

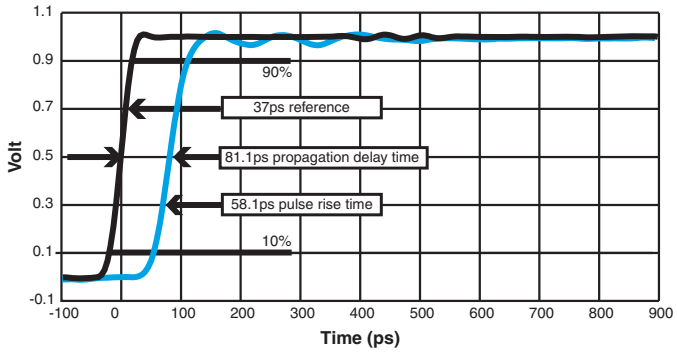

RF NOTES

1. Test conditions:
   - *a.* Fixture: .031" copper clad, reinforced PTFE, RT/duroid® 6002 with SMA connectors. (RT/duroid® is a registered trademark of Rogers Corporation.)
   - *b.* Room ambient temperature.
   - *c.* Terminals not tested were terminated with 50-ohm load.
   - *d.* Contact signal level: –10 dBm.
   - *e.* No. of test samples: 2.
2. Data presented herein represents typical characteristics and is not intended for use as specification limits.
3. Data is per pole, except for pole-to-pole data.
4. Data is the average from readings taken on all open contacts.
5. Data is the average from readings taken on poles with coil energized and de-energized.
6. Data is the average from readings taken on all closed contacts.
7. Test fixture effect de-embedded from frequency and time response data.

TYPICAL RF INSERTION LOSS REPEATABILITY CHARACTERISTICS (NOTES 1 AND 2)
SERIES RF100 AND RF103

REPEATABILITY CHARACTERISTICS RF100 RELAYS

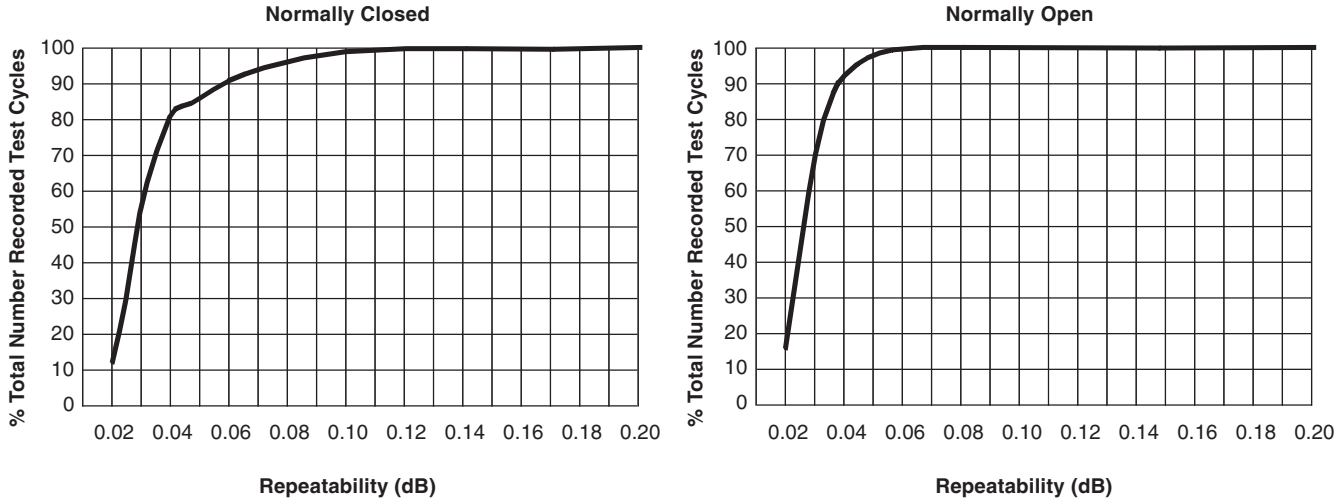

REPEATABILITY CHARACTERISTICS RF103 RELAYS

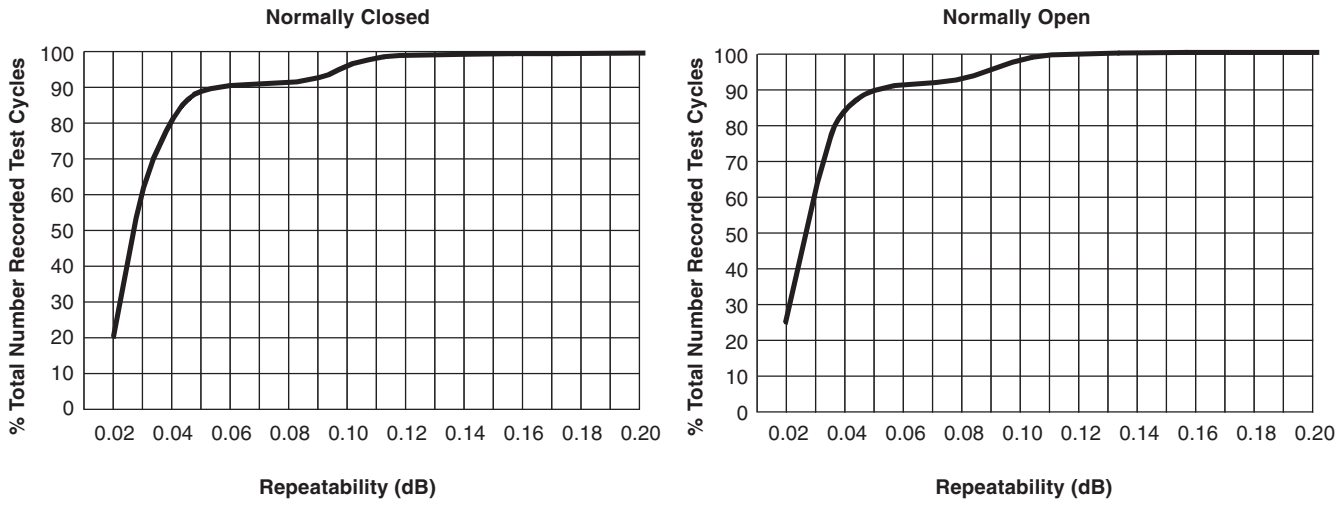

RF INSERTION LOSS REPEATABILITY NOTES

1. Test conditions:
   - *a.* Fixture: .031" copper clad, reinforced PTFE, RT/duroid® 6002 with SMA connectors. (RT/duroid® is a registered trademark of Rogers Corporation.)
   - *b.* Relay header is in contact with, but not soldered to, ground plane or connected to ground via ground pin.
   - *c.* Test performed at room ambient temperature.
   - *d.* Contact signal level: 20 dBm.
2. Data presented herein represents typical characteristics and is not intended for use as specification limits.
3. Insertion loss repeatability measured over frequency range from .3 MHz to 4 GHz.

SPECIFICATIONS ARE SUBJECT TO CHANGE WITHOUT NOTICE
www.teledynerelays.com
©2003 TELEDYNE RELAYS

SERIES RF100 AND RF103
GENERAL ELECTRICAL SPECIFICATIONS (@25°C)

Contact arrangement		DPDT
Rated duty		Continuous
Contact resistance		.100 ohm max. initial (measured 1/8" from the header)
Contact load rating		Low level: 10 to 50 µA, 10 to 50 mV
Contact life rating		10,000,000 cycles typical at low level
Coil operating power		RF100: 369–500 mW typical @ nominal rated voltage RF103: 180–250 mW typical @ nominal rated voltage
Operate time	**RF100**	4.0 ms. max.
	RF103	6.0 ms. max.
Release time	**RF100**	3.0 ms. max.
	RF103	3.0 ms. max.
Intercontact capacitance		0.4 pF typical
Insulation resistance		1,000 MΩ min. (between mutually isolated terminals)
Dielectric strength		350 VRMS / 60 Hz @ atmospheric pressure

DETAILED ELECTRICAL SPECIFICATIONS (@25°C)

BASE PART NUMBERS		**RF100-5 RF103-5**	**RF100-12 RF103-12**
Coil voltage, nominal, VDC		5.0	12.0
Coil resistance, ohms ± 20%	**RF100**	50	390
	RF103	100	800
Pick-up voltage max, VDC		3.6	9.0

OUTLINE DIMENSIONS

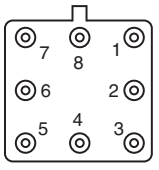

TERMINAL NUMBERING

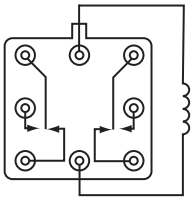

SCHEMATIC

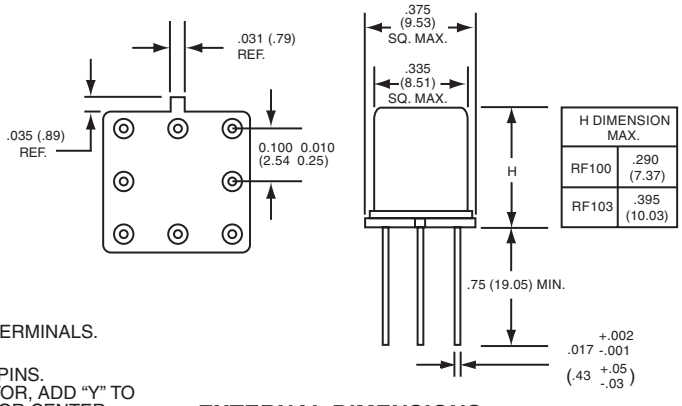

EXTERNAL DIMENSIONS

- TERMINAL NUMBERING AND SCHEMATIC ARE AS VIEWED FROM THE TERMINALS.
- DIMENSIONS ARE IN INCHES (MILLIMETERS).
- SCHEMATIC AND EXTERNAL DIMENSIONS SHOWN WITHOUT GROUND PINS.
- TO ORDER THE CASE GROUND OPTION, AFTER THE SERIES DESIGNATOR, ADD "Y" TO THE PART NUMBER FOR TAB POSITION OR "Z" TO THE PART NUMBER FOR CENTER POSITION.

EXAMPLE: RF103Y-COIL VOLTAGE

GENERAL NOTES

1. Relays will exhibit no contact chatter in excess of 10 µsec or transfer in excess of 1 µsec.

©2003 TELEDYNE RELAYS

Appendix A: Spacer Pads

Pad designation and bottom view dimensions	Height	For use with the following:	Dim. H Max.
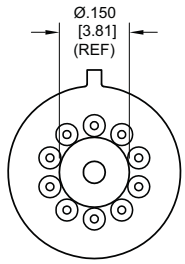 "M4" Pad for TO-5	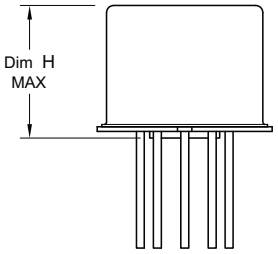	ER411T ER412, ER412D, ER412DD	.295 (7.49)
		712, 712D, 712TN, RF300, RF310, RF320	.300 (7.62)
		ER420, ER422D, ER420DD, 421, ER421D, ER421DD, ER422, ER422D, ER422DD, 722, 722D, RF341	.305 (7.75)
		ER431T, ER432T, ER432, ER432D, ER432DD	.400 (10.16)
		732, 732D, 732TN, RF303, RF313, RF323	.410 (10.41)
		RF312	.350 (8.89)
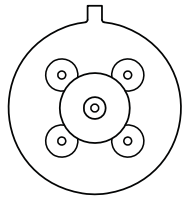 "M4" Pad for TO-5	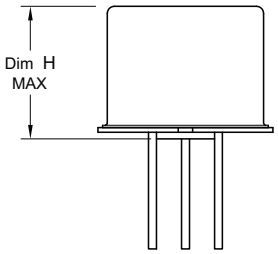	ER411, ER411D, ER411DD	.295 (7.49)
		ER431, ER431D, ER431DD	.400 (10.16)
		RF311	.300 (7.62)
		RF331	.410 (10.41)
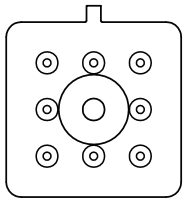 "M4" Pad for Centigrid®	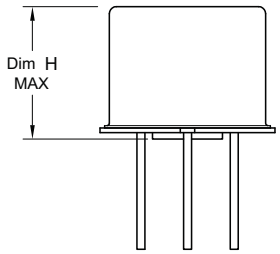	172, 172D	.305 (7.75)
		ER114, ER114D, ER114DD, J114, J114D, J114DD	.300 (7.62)
		ER134, ER134D, ER134DD, J134, J134D, J134DD	.400 (10.16)
		RF100	.315 (8.00)
		RF103	.420 (10.67)
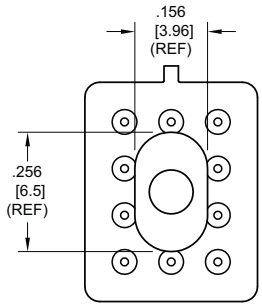 "M9" Pad for Centigrid®	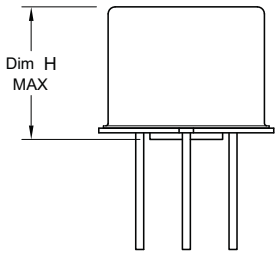	122C, A152	.320 (8.13)
		ER116C, J116C	.300 (7.62)
		ER136C, J136C	.400 (10.16)
		RF180	.325 (8.25)
		A150	.305 (7.75)

Notes:

1. Spacer pad material: Polyester film.
2. To specify an "M4" or "M9" spacer pad, refer to the mounting variants portion of the part numbering example in the applicable datasheet.
3. Dimensions are in inches (mm).
4. Unless otherwise specified, tolerance is ± .010 (.25).
5. Add 10 mΩ to the contact resistance show in the datasheet.
6. Add 0.01 oz. (0.25 g) to the weight of the relay assembly shown in the datasheet.

© 2008 Teledyne Relays

Appendix A: Spreader Pads

Pad designation and bottom view dimensions	Height	For use with the following:	Dim. H Max.
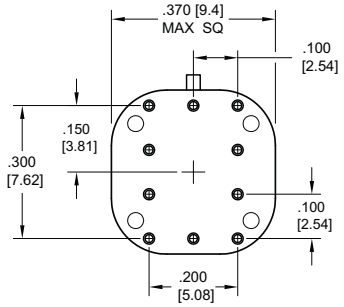 "M" Pad 5/ 6/	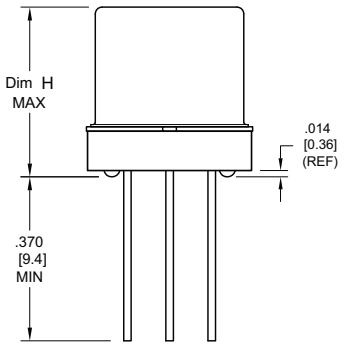	ER411T, J411T, ER412, ER412D ER412DD, J412, J412D, J412DD ER412T, J412T	.388 (9.86)
		712, 712D, 712TN	.393 (9.99)
		ER431T, J431T, ER432, ER432D ER432DD, J432, J432D, J432DD ER432T, J432T	.493 (12.52)
		732, 732D, 732TN	.503 (12.78)
		ER420, J420, ER420D, J420D ER420DD, J420DD, ER421, J421 ER421D, J421D, ER421DD J422D, ER422DD, J422DD, 722	.398 (10.11)
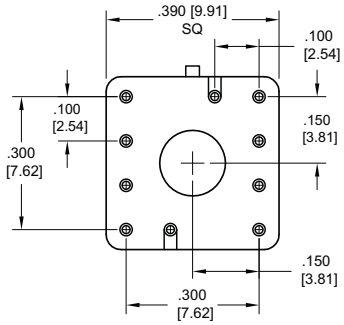 "M2" Pad 7/ 8/	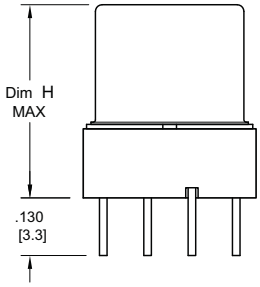	ER411T ER412, ER412D, ER412DD J412, J412D, J412DD	.441 (11.20)
		712, 712D	.451 (11.46)
		ER421, ER421D, ER421DD 722, 732D	.451 (11.46)
		ER431T ER432, ER432D, ER432DD	.546 (13.87)
		732, 732D	.556 (14.12)
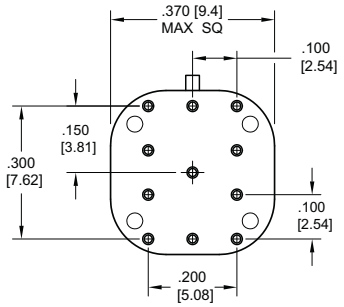 "M3" Pad 5/ 6/ 9/	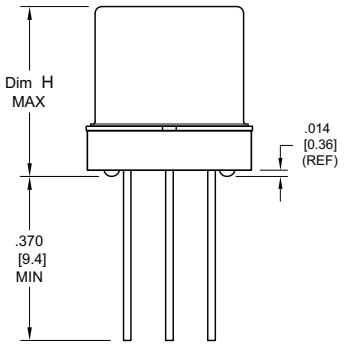	ER411, ER411D, ER411DD ER411TX ER412X, ER412DX, ER412DDX ER412TX	.388 (9.86)
		712X, 712DX, 712TNX	.393 (9.99)
		ER420X, ER420DX, ER420DDX ER421X, ER421DX, ER421DDX ER422X, ER422DX ER422DDX, 722X, 722DDX	.398 (10.11)
		ER431, ER431D, ER431DD ER431TX ER432X, ER432DX, ER432DDX ER432TX	.493 (12.52)
		732X, 732DX, 732TNX	.503 (12.78)

Notes:

1. Spreader pad material: Diallyl Phthalate.
2. To specify an "M", "M2" or "M3" spreader pad, refer to the mounting variants portion of the part number example in the applicable datasheet.
3. Dimensions are in inches (mm).
4. Unless otherwise specified, tolerance is ± .010" (0.25).

5/. Add 25 mΩ to the contact resistance shown in the datasheet.
6/. Add .01 oz. (0.25 g) to the weight of the relay assembly shown in the datasheet.
7/. Add 50 mΩ to the contact resistance shown in the datasheet.
8/. Add 0.025 oz (0.71 g) to the weight of the relay assembly shown in the datasheet.
9/. M3 pad to be used only when the relay has a center pin (e.g. ER411M3-12A, 722XM3-26.)

 © 2008 Teledyne Relays

Appendix A: Ground Pin Positions

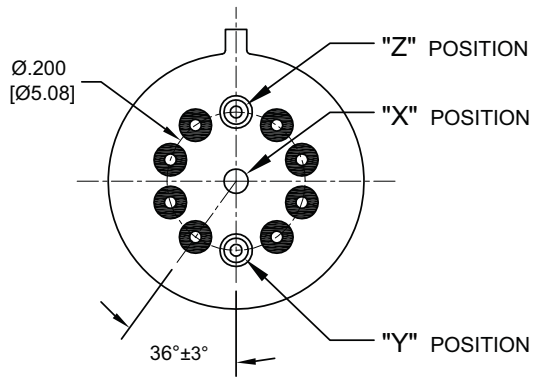

TO-5 Relays:
ER411T, ER412, ER412T, ER420, ER421, ER422, ER431T, ER432, ER432T, 712, 712TN, 400H, 400K, 400V, RF300, RF303, RF341, RF312, RF310, RF313, RF320, RF323

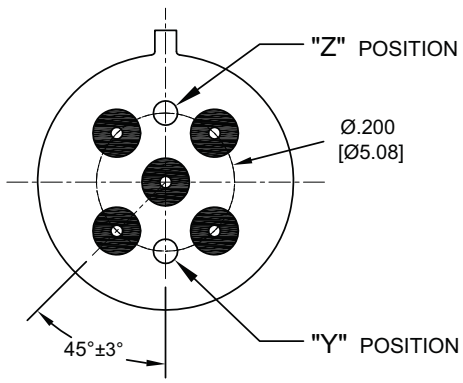

TO-5 Relays:
ER411, ER431, RF311, RF331

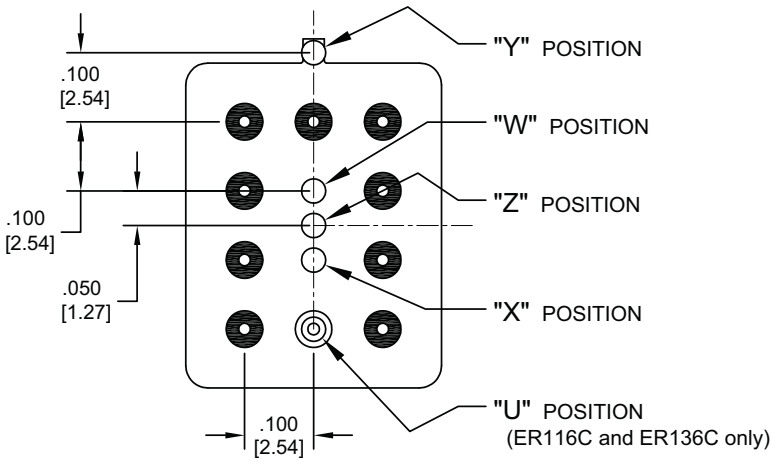

Centigrid® Relays:
RF180, ER116C, 122C, ER136C

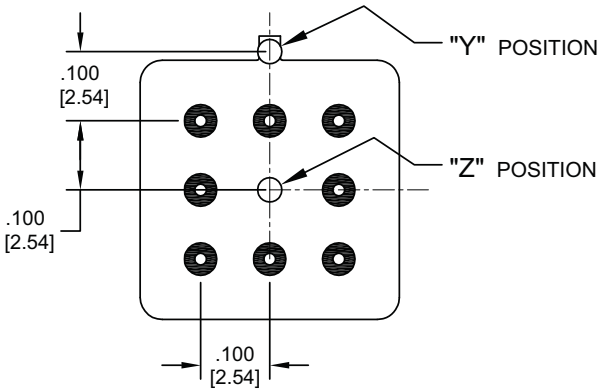

Centigrid® Relays:
RF100, RF103, ER114, ER134, 172

○ Indicates ground pin position

● Indicates glass insulated lead position

◎ Indicates ground pin or lead position depending on relay type

NOTES
1. Terminal views shown
2. Dimensions are in inches (mm)
3. Tolerances: ± .010 (±.25) unless otherwise specified
4. Ground pin positions are within .015 (0.38) dia. of true position
5. Ground pin head dia., 0.035 (0.89) ref: height 0.010 (0.25) ref.
6. Lead dia. 0.017 (0.43) nom.

© 2008 Teledyne Relays