

TURCK

Industrial Automation

I/O SOLUTIONS FOR THE CONTROL CABINET

Sense it! Connect it! Bus it! Solve it!

I/O solutions for the control cabinet















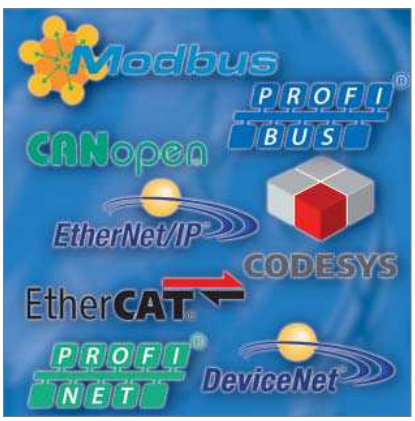



The Company



The Company

TURCK is one of the world's leading groups of companies in the field of industrial automation. With more than 3.350 employees in 27 countries and with sales partners in a further 60 countries, we are always close to our customers worldwide. As specialists in sensor, fieldbus, connection and interface technology, as well as HMI (human machine interfaces) and RFID (radio frequency identification), we offer efficient solutions for manufacturing and process automation. State-of-the-art production facilities in Germany, Switzerland, the USA, Mexico and China enable our family-owned enterprise to meet the requirements of the local markets quickly and flexibly at any time.



The Program

Whether in machine building or system building, in the automotive sector, transport and handling sector, in the food and beverage sector or in the chemical and pharmaceutical industry: automation solutions and products from TURCK increase the availability and efficiency of your machines and plants. The effective standardization of the products also reduces costs for procurement, inventory management, installation and operational reliability selectively. Sector-specific application know-how, resulting from a close dialog with customers, coupled with electronic development and manufacturing at the highest level, ensure optimum solutions for your automation tasks.

Hans Turck GmbH & Co. KG ▪ Tel. +49 208 49 52-0 ▪ Fax +49 208 49 52-264



The Service

With almost 50 years of experience and an extensive know-how, we can support you in every project phase with efficient services – from the initial analysis right through to the tailored solution and commissioning of your application. The prime objective of our activities is to continuously improve the efficiency and productivity of your manufacturing process or machine. The excellent quality of our products, combined with the supportive services of our specialists and a fast delivery service, ensures the high availability of your systems.



The Product Database

Regardless of whether you require software tools for programming, configuration or commissioning support, detailed data sheets or CAD data in almost 80 export formats, you will find the right solution quickly in just a few clicks at the TURCK product database at www.turck.com – offering 24/7 worldwide access in nine different languages. Virtually all products and solutions can be accessed directly – clearly structured, fully documented and free of charge, without any registration required.

Table of Contents



I/O solutions for the control cabinet

Whether as a modular system or in a block design, in standard or ECO versions, for the Ex or non-Ex area – TURCK offers you flexible solutions for the cabinet. The BL20 bus terminal system makes it possible to plan and implement tailored IP20 I/O solutions. The user can freely combine all I/O modules regardless of the fieldbus and implement the required number of I/O channels. Gateways are used to provide the connection to the master. The *excom*® system provides distributed I/O modules with protection to IP20 for connecting binary and analog intrinsically safe and non-intrinsically safe field devices. The TURCK interface technology program offers the right functions, designs and variants for isolating, conditioning, processing, converting and matching digital and analog signals.



How do I find the right solution for my application?

The catalog offers a selection of flexible I/O solutions for installation in the control cabinet. In addition to the IP20 I/O systems BL20 and *excom*® the product groups of IP20 I/O block modules and interface modules are introduced. A first overview offers the complete table of contents. Detailed information on product groups is provided in the relevant chapter. The first pages of these chapters provide a brief description of the product group as well as a tabular overview of the available products and functions. The overview also provides page references on the detailed product information, which are presented in the subsequent pages of the chapters. If you already know the type code the type index will guide you directly to the required product.

BL20 – Modular I/O system in IP20

Short description and table of contents	Page 6
Our strengths – Your advantages	Page 8
System integration	Page 10
System overview	Page 12
System and field supply	Page 14
Type code	Page 16
BL20 components	Page 18
BL20 system – Accessories	Page 126
PROFIBUS DP – Accessories	Page 130
DeviceNet™/CANopen – Accessories	Page 134
Ethernet – Accessories	Page 140
Power supply – Accessories	Page 142

Compact block I/O modules in IP20

Short description and table of contents	Page 150
Our strengths – Your advantages	Page 152
Type code	Page 154
Block I/O modules FDP20 (PROFIBUS-DP)	Page 156
Block I/O modules FDN20 (DeviceNet™)	Page 164
Block I/O modules FEN20 (Multiprotocol-Ethernet)	Page 172
Block I/O modules Fxx20 – Accessories	Page 176

excom® – Remote I/O system

Short description	Page 179
Standardized system features	Page 180
Our strengths – Your advantages	Page 182
System installation – Overview	Page 184
excom® – Solutions for the Ex areas	Page 186
– Table of contents	Page 187
excom® – Solutions for the non-Ex areas	Page 246
– Table of contents	Page 247
System enclosure	Page 286
excom® – Accessories	Page 288

Interface technology

Interface technology – Short description	Page 293
Interface technology in modular housing	Page 294
– Short description and table of contents	Page 294
– Our strengths – Your advantages	Page 298
– Type code	Page 300
– Interface modules series IM, IME, IMS, IMSP	Page 302
Interface modules in IP67 housing	Page 480
– Short description and table of contents	Page 480
– Our strengths – Your advantages	Page 482
– Type code	Page 484
– Interface modules series IMC	Page 486
Interface technology – Accessories	Page 498

Basics of explosion protection

Basic information	Page 500

Glossary

Terms and explanations	Page 512

Index of types

Page 522

BL20 – Modular I/O system in IP20



BL20 – Modular I/O system in IP20

Open, modular, highly flexible: The BL20 universal bus terminal system makes it possible to plan and implement tailored I/O solutions for the IP20 area. The user can freely combine all I/O modules irrespective of the fieldbus and implement the required I/O channels to the precise number of bits: analog and digital signal types, 1, 2, 4, 8, 16 or 32 channels, block or slice designs.
Technology modules with IO-Link, counter, PWM, SSI, RS232, RS485, RS422 or RFID interfaces for the TURCK identification system are available to integrate more complex field devices.
The base modules are used to connect the sensors, actuators and field devices. Variants are available with different numbers of cage clamp or screw terminals.
The power feeding modules enable the provision of a new field supply. The use of these modules may be necessary for high power outputs; it also offers the possibility of forming application-specific potential groups at any location in the BL20 system.
The BL20 gateways feature an integrated power supply for the module bus in order to supply the I/O modules. If the power supply for the modules is not sufficient (up to 74 modules depending on gateway), the power supply can be refreshed with a bus refreshing module.
Gateways, which control the entire data exchange between the PLC and the I/O modules, are used to connect to the fieldbus. Proven standards such as PROFIBUS-DP, DeviceNet™, CANopen, Modbus RTU/ASCII, Modbus TCP, EtherNet/IP™, PROFINET and EtherCAT® can be used here.
CODESYS programmable gateways are available for complex applications. The gateways handle local control tasks autonomously and can be used for remote pre-processing in order to relieve the load on the higher-level controller.
FDT/DTM technology enables the user to set the parameters for the BL20 system via a graphical user interface. Whether in online or offline mode, commissioning or testing, the FDT/DTM technology simplifies the planning of modules as well as the configuration and parametrization, irrespective of the fieldbus used.

Type	Ident No.	Description	Page
BL20-GW-DPV1	6827234	Gateway for PROFIBUS-DP	18
BL20-E-GW-DP	6827250	ECO Gateway for PROFIBUS-DP	20
BL20-GWBR-CANOPEN	6827167	Gateway for CANopen	22
BL20-E-GW-CO	6827252	ECO Gateway for CANopen	24
BL20-GWBR-DNET	6827168	Gateway for DeviceNet™	26
BL20-E-GW-DN	6827301	ECO Gateway for DeviceNet™	28
BL20-E-GW-RS-MB/ET	6827381	ECO Gateway for Modbus RTU / ASCII	30
BL20-E-GW-EN	6827329	ECO Gateway for PROFINET, EtherNet/IP™ and Modbus TCP	32
BL20-E-GW-PN	6827377	ECO Gateway for PROFINET (IRT)	34
BL20-E-GW-EC	6827380	ECO Gateway for EtherCAT®	36
BL20-GW-EN	6827237	Gateway for Modbus TCP	38
BL20-GW-EN-IP	6827247	Gateway for EtherNet/IP™	40
BL20-PG-EN	6827249	CODESYS programmable gateway for Modbus TCP	42

Type	Ident No.	Description	Page
BL20-PG-EN-IP	6827248	CODESYS programmable gateway for EtherNet/IP™	44
BL20-BR-24VDC-D	6827006	Bus refreshing module	46
BL20-BR-24VDC-RED	6827366	Redundant bus refreshing module	48
BL20-PF-24VDC-D	6827007	Power feeding module, 24 VDC	50
BL20-PF-120/230VAC-D	6827008	Power feeding module, 120/230 VAC	52
BL20-2DI-120/230VAC-P	6827011	Input module, digital, 120/230 VAC, 2-channel	54
BL20-4DI-24VDC-P	6827012	Input module, digital, 24 VDC, PNP, 4-channel	56
BL20-4DI-24VDC-N	6827013	Input module, digital, 24 VDC, NPN, 4-channel	58
BL20-4DI-NAMUR	6827212	Input module, digital, NAMUR, 4-channel	60
BL20-E-8DI-24VDC-P	6827227	ECO Input module, digital, 24 VDC, PNP, 8-channel	62
BL20-E-16DI-24VDC-P	6827231	ECO Input module, digital, 24 VDC, PNP, 16-channel	64
BL20-16DI-24VDC-P	6827014	Input module, digital, 24 VDC, PNP, 16-channel	66
BL20-32DI-24VDC-P	6827015	Input module, digital, 24 VDC, PNP, 32-channel	68
BL20-2DO-24VDC-0.5A-N	6827025	Output module, digital, 24 VDC, 0.5 A, NPN, 2-channel	70
BL20-2DO-24VDC-2A-P	6827026	Output module, digital, 24 VDC, 2.0 A, PNP, 2-channel	72
BL20-2DO-120/230VAC-0.5A	6827137	Output module, digital, 120/230 VAC, 0.5 A, 2-channel	74
BL20-2DO-R-CO	6827030	Output module, relay, changeover, 2-channel	76
BL20-4DO-24VDC-0.5A-P	6827023	Output module, digital, 24 VDC, 0.5 A, PNP, 4-channel	78
BL20-E-8DO-24VDC-0.5A-P	6827226	ECO Output module, digital, 24 VDC, 0.5 A, PNP, 8-channel	80
BL20-E-16DO-24VDC-0.5A-P	6827230	ECO Output module, digital, 24 VDC, 0.5 A, PNP, 16-channel	82
BL20-16DO-24VDC-0.5A-P	6827027	Output module, digital, 24 VDC, 0.5 A, PNP, 16-channel	84
BL20-32DO-24VDC-0.5A-P	6827220	Output module, digital, 24 VDC, 0.5 A, PNP, 32-channel	86
BL20-2AI-I(0/4…20MA)	6827021	Input module, analog, current, 2-channel	88
BL20-2AIH-I	6827331	Input module, analog, current, HART®, 2-channel	90
BL20-2AI-U(-10/0…+10VDC)	6827022	Input module, analog, voltage, 2-channel	92
BL20-2AI-PT/NI-2/3	6827017	Input module, analog, temperature, Pt/Ni, 2/3-wire, 2-channel	94
BL20-2AI-THERMO-PI	6827020	Input module, analog, thermocouples, 2-channel	96
BL20-4AI-U/I	6827217	Input module, analog, voltage/current, 4-channel	98
BL20-E-4AI-TC	6827367	ECO Input module, analog, thermocouples, 4-channel	100
BL20-E-8AI-U/I-4PT/NI	6827325	ECO Input module, analog, voltage/current/temperature, 8-channel	102
BL20-2AO-I(4…20MA)	6827034	Output module, analog, current, 2-channel	104
BL20-2AOH-I	6827332	Output module, analog, current, HART®, 2-channel	106
BL20-2AO-U(-10/0…+10VDC)	6827033	Output module, analog, voltage, 2-channel	108
BL20-E-4AO-U/I	6827328	ECO Output module, analog, voltage/current, 4-channel	110
BL20-1RS232	6827169	RS232 module, 1-channel	112
BL20-1RS485/422	6827165	RS485/422 module, 1-channel	114
BL20-1SSI	6827166	SSI module, 1-channel	116
BL20-E-2CNT-2PWM	6827341	ECO Counter/Encoder, PWM outputs, 2-channel	118
BL20-2RFID-A	6827233	RFID module (advanced), 2-channel	120
BL20-2RFID-S	6827306	RFID module (simple), 2-channel	122
BL20-E-4IOL	6827385	ECO IO-Link master, 4-channel	124

Our Strengths – Your Advantages



Gateways – Communication with fieldbus and Ethernet

The BL20 I/O system features gateways for the PROFIBUS-DP, DeviceNet™, CANopen and Modbus RTU/ASCII fieldbuses, as well as gateways for integration in industrial Ethernet networks. In addition, multiprotocol solutions are available that unite the three Ethernet protocols EtherNet/IP™, Modbus TCP and PROFINET in an I/O device: The Ethernet multiprotocol gateways automatically detect which of the three Ethernet networks is being used. High-feature gateways for PROFINET IRT and EtherCAT®, as well as CODESYS programmable gateways for Modbus TCP and EtherNet/IP™ round off the program.

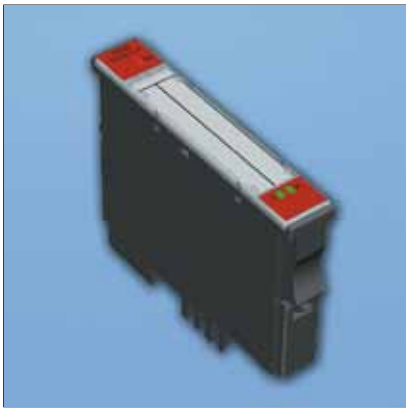

Electronic modules – With a wide range of signal types

The large number of I/O modules available allows the user the possibility of integrating virtually any required signal type in the BL20 system. The program includes digital and analog I/O modules for standard I/O signals, relay modules, as well as technology modules with IO-Link, counter, PWM, SSI, RS232, RS485, RS422 or RFID interfaces. The digital I/O modules for 24 VDC are available as PNP or NPN versions with different numbers of channels and output ratings. Device variants, such as for NAMUR signals or 230 VAC signals round off the range of products. Besides the analog I/O modules for current or voltage signals, there are also combination modules, giving the possibility to choose between current, voltage and also Pt/Ni elements for each channel. Modules for thermocouples or with HART® compatibility round off the range.



Base modules – With different connection options

The BL20 system offers the user the possibility of choosing between different connection options. The standard I/O modules consist of two components – the electronic module and a separate connection level, the base module, which is available either with tension spring connection or screw terminals. The base modules are available in different versions, for instance, with or without separate terminals for the sensor supply. The ECO modules feature an integrated terminal level, thus eliminating the need for a separate base module. In this way, considerably more I/O channels can be integrated in restricted spaces.



ECO housings – Space-saving with a high channel density

Besides the gateways and I/O modules in the standard housing, versions are also available in the ECO housing. The gateways in the ECO housing have a particularly slimline design, enabling the user to save space on the DIN rail. Unlike the standard gateways, the ECO versions are provided with push-in terminals instead of screw or tension spring connection. Unlike the standard I/O modules, the I/O modules in the ECO housing have the connection level already integrated. In this way a higher channel density can be achieved with the ECO I/O modules.



Power supply modules – Flexible supply concepts

Special bus refreshing and power feeding modules are available for the system and field supply. Above a specific number of I/O modules, the bus refreshing modules must be integrated in the BL20 system in order to refresh the internal system power supply. This makes it possible to create extensive stations with a large number of I/O modules. Redundant bus refreshing modules make it possible to create redundant supplied systems. Power feeding modules are used for repowering the field devices. This may be necessary when using several I/O modules, especially output modules, if the field supply current exceeds 10 A. Power feeding modules are used for instance to create new potential groups in order to implement the safety-related off switching of outputs or to implement the potential isolation of plant sections.

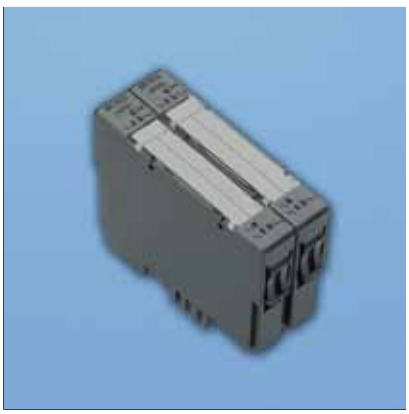

Redundant power supply – Increased availability

The use of BR-24VDC-RED modules enables the user to turn the BL20 I/O system into a redundantly supplied system. In this way it is possible to redundantly supply both the I/O system itself as well as the field devices connected to it. This considerably reduces the risk of failure and increases system availability accordingly. Different potential groups can be created in redundancy mode as well as in normal operation, in order, for example, to implement the safety-related off switching of specific outputs.

BL20 – System integration

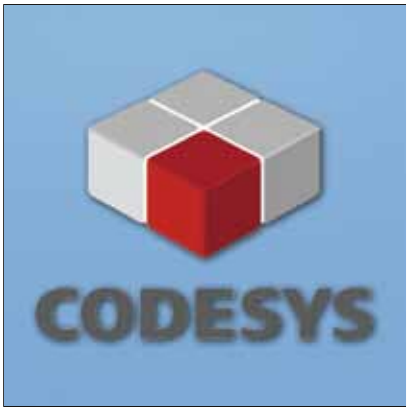

Remote signal processing

The programmable gateways can be programmed using the IEC 61131-3 compliant CODESYS vendor-neutral programming software and can thus be formed into distributed control units. Possible applications include for example the stand-alone control of an application or use in networks for the remote pre-processing of signals. The graphical programming user interface supports all IEC-61131-3 programming languages:

- Instruction list (IL)
- Ladder diagram (LD)
- Function block diagram (FBD)
- Structured text (ST)
- Sequential function chart (SFC)

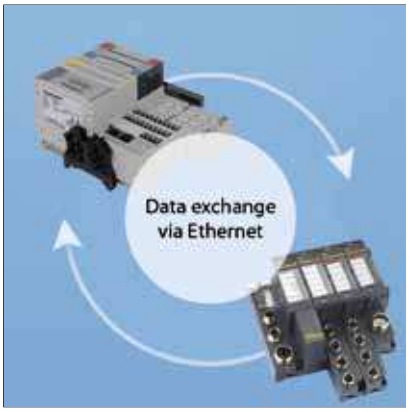

Simple network of several I/O stations

The global network variables function integrated in CODESYS enables the simple interconnection and communication of several I/O stations. This makes it possible to network heterogeneous systems quickly and simply. The use of standard transmission protocols such as TCP/IP and UDP/IP enables the implementation of bidirectional data exchange between CODESYS systems without any additional programming. For example, several decentralized systems can interact with each other without the need for a higher-level controller. Connection to CODESYS-3 controllers is also straightforward.



Flexible programming in CODESYS

In order to ensure the simple integration of the hardware in CODESYS, TURCK provides for the programming gateways several target support packages as drivers for the target system. The I/O modules can be simply added to the hardware configuration using drag and drop. A standard editor offers a particularly clearly designed interface for the I/O configuration and parameter setting. Symbolic variables can be declared for the I/O addresses in order to simplify the use of and access to the I/Os. Furthermore, several diagnostics and commissioning functions, as well as function blocks such as for the *BL ident*® RFID system, support the user in programming and commissioning.



Efficient parameter setting with FDT/DTM

The BL20 system can be configured and parametrized via a graphical user interface based on FDT/DTM technology. For this TURCK provides special DTMs which can be incorporated in any FDT frame application for its I/O systems and modules. This enables the reading and setting of process data, and the simple execution of diagnostic functions, even without a controller. This simplifies both the testing of the application as well as commissioning in the field. Both the PACT*ware*™ FDT/DTM frame application as well as the DTMs are available free of charge from the TURCK website at www.turck.com



Supporting software tools

Whether online or offline, PACT*ware*™ simplifies the planning and implementation of your I/O system. The software provides some excellent services, even for commissioning and the execution of tests. The range of functions in the software includes a selection aid for the modules required, the offline planning and design, as well as the configuration, parameterization and commissioning of individual modules. Other functions include the reading and setting of process data, a commissioning tool for checking the wiring and sensors without a PLC, the realistic display of the configured BL20 components and an automatic documentation of the configured BL20 systems.

BL20 – System overview

Redundant power supply
- BR-RED modules for redundant power supply to the I/O system and the connected periphery
- More redundantly powered potential groups possible

HART® communication
- Analog input and output modules with HART® communication

Gateway
- The interface to the higher-level control
- Gateways for PROFIBUS, CANopen, DeviceNet™, Modbus RTU/ASCII, Modbus TCP, EtherNet/IP™, PROFINET and EtherCAT®

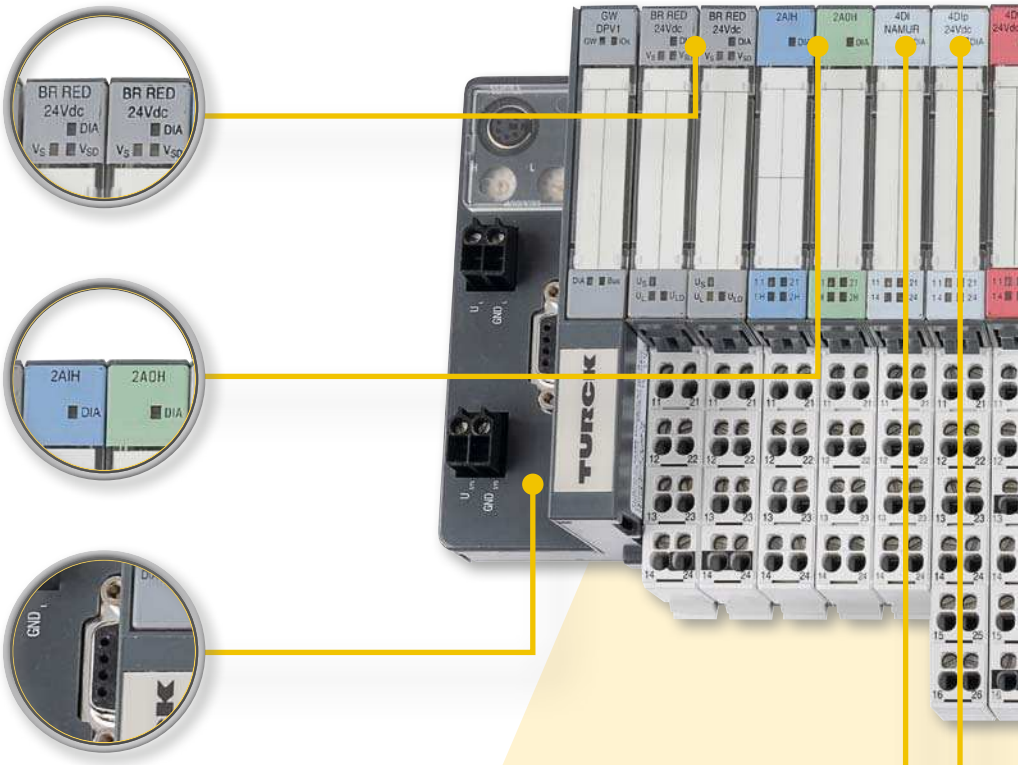

CODESYS programmable (optional)
- Distributed pre-processing
- Relief of the control
- Self-contained units possible
- Royalty-free programming according to IEC 61131

Standard I/Os - flexible and user-friendly
- Interchangeable electronic modules - without disconnecting the field wiring
- Single or block modules
- Screw or tension spring terminals

FDT/DTM
- DTM for Remote I/O
- Topology scan
- Commissioning
- Simulation and diagnostics

Hans Turck GmbH & Co. KG ▪ Tel. +49 208 49 52-0 ▪ Fax +49 208 49 52-264

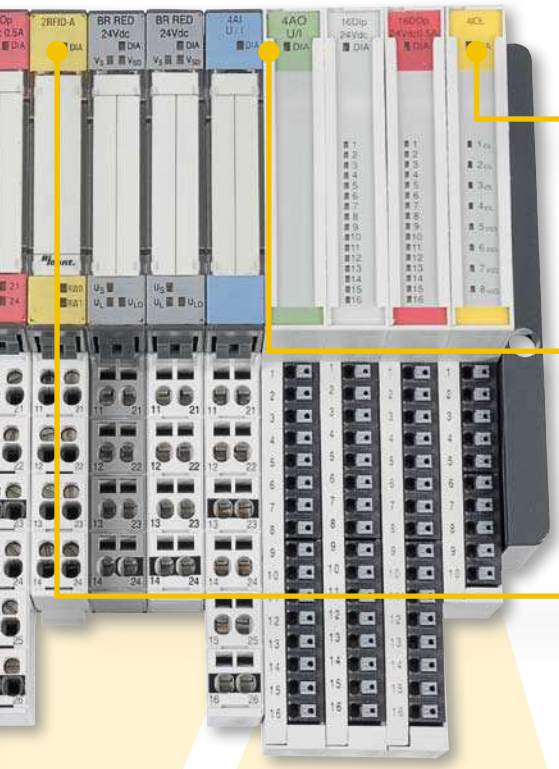



Technology modules
- Serial interfaces RS232, RS485/422 for the integration of complex field devices
- SSI
- Counter and pulse width modulation
- IO-Link master
- RFID

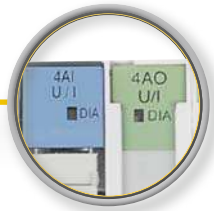

Analog I/O modules
- Current / Voltage
- Pt/Ni temperature probes
- Thermocouples

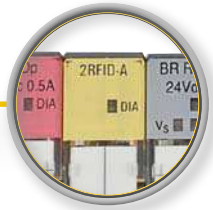

RFID
- 2-channel RFID modules
- Integration of HF and UHF read/write heads of the TURCK RFID System *BL ident®*

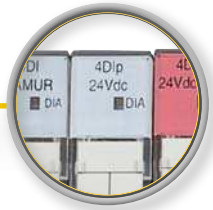

Digital I/O modules
- 24 VDC PNP
- 24 VDC NPN
- 120/230 VAC
- Relay modules

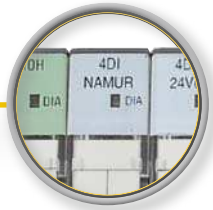

NAMUR inputs
- 4-channel NAMUR input modules acc. to EN 60947-5-6

ECO I/Os
- Up to 16 I/Os on 12.5 mm
- Integrated connection level with push-in connection technology
- Extremely compact design

EtherCAT®

odbus PROFINET® EtherNet/IP™

BL20 – System and field supply

General system power supply

The BL20 system features two power circuits:

- The internal module bus feeds the module electronics and the gateway.
- The field supply feeds all connected field devices.

Forming potential groups

Bus-Refreshing modules as well as Power-feeding modules can be used for the creation of potential groups. Modules with 24 VDC and 120/230 VAC field supply cannot be used in the same potential group. The use of digital input modules for 120/230 VAC requires the creation of a separate potential group with the power feeding module BL20-PF-120/230VAC-D.

Module bus supply

The voltage supply for the module bus is integrated in the BL20 gateways. If the module bus is not sufficiently supplied (max. 1.5 A), a second refreshing module has to be applied – see chapter Supply concept on the next page .

NOTE: Bus refreshing modules can not be used in combination with the ECO gateway for PROFIBUS-DP.

Field supply

The field supply is provided by the gateway. A power feeding module has to be used if the field supply of fieldbus nodes reaches 8/10 A (depending on the gateway) or a new potential group is required.

For details on the system and field supply, please refer to the technical data of the individual gateways.

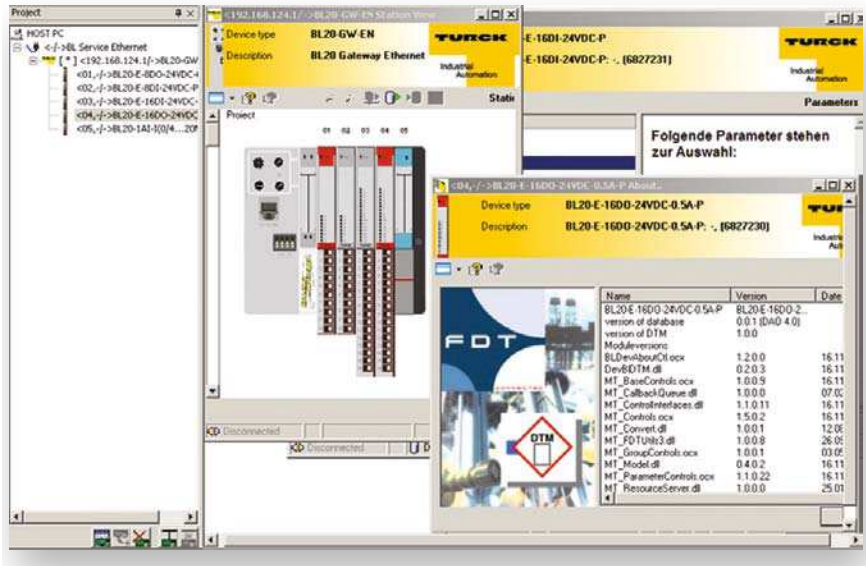

System planning

For the planning of many complex BL20 stations, different factors have to be considered. For example rated current consumption of the modules, number of modules, parameters and data volume and possible restrictions imposed by the higher level fieldbus.
The I/O-ASSISTANT (PACTware™ and BL20-DTM), which can be downloaded from our website, checks all relevant parameters and simplifies project planning considerably. The I/O-ASSISTANT is also able to generate dimension drawings and documentation of the stations. Reading and setting of I/Os is also possible which proves very helpful for commissioning. Furthermore, module parameters can also be set.

Gateways in Standard L-Design

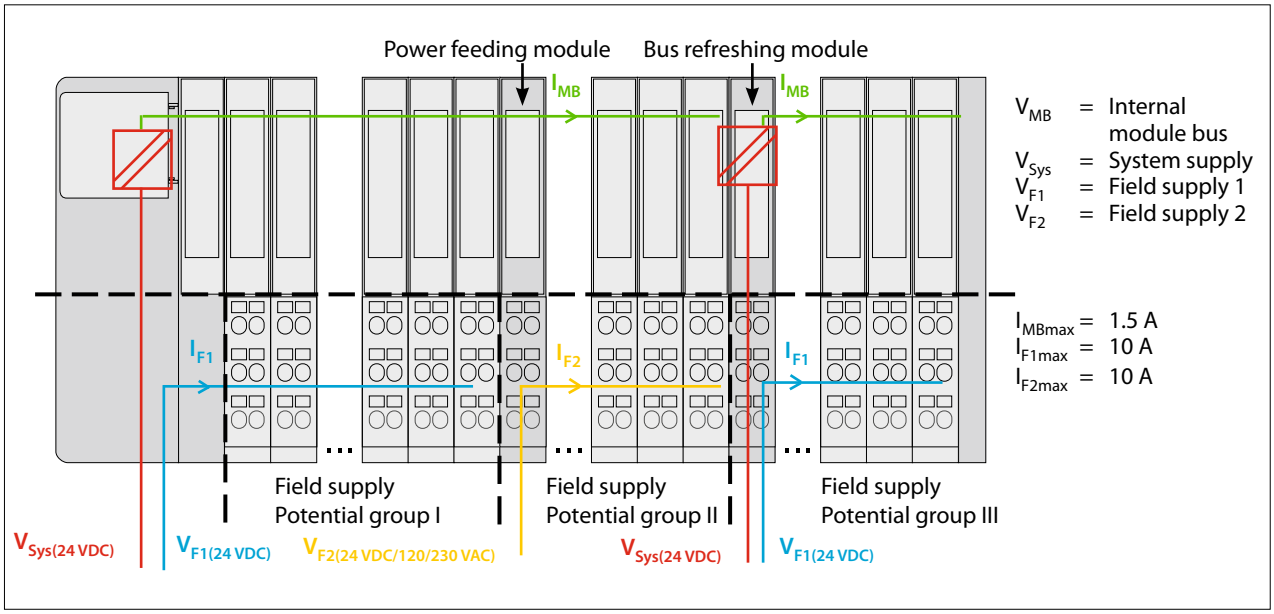

Gateways in ECO-Design*

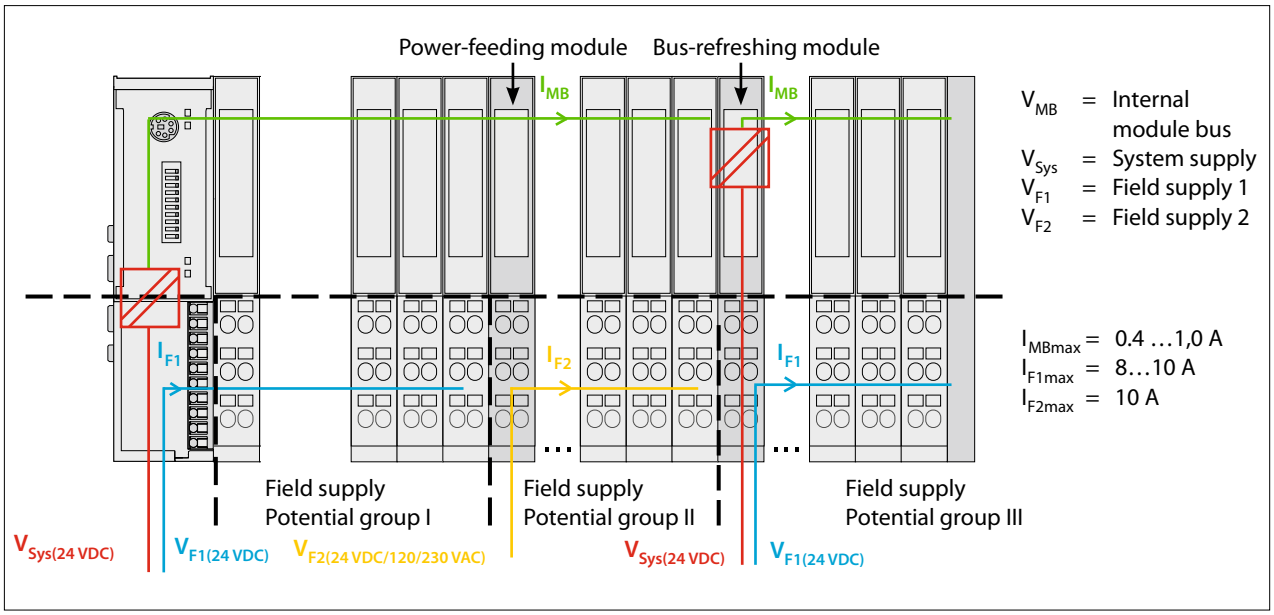

***NOTE:** Bus-refreshing modules can not be used in combination with the ECO gateway for PROFIBUS-DP.

Type code

Type code BL20 – Base modules



BL20 Product series

Product series
BL20 BL20 system

– **S** Device design

Device design
B block design
P base module for power supply
S slice design

3 Connection levels

Number of connection levels
3 3 connection levels
4 4 connection levels
6 6 connection levels

T Connection technology

Connection technology
S screw connection
T tension spring connection

– **S** 1st Connection levels

1st Connection levels
S non-bridged connectors

B 2nd Connection levels

2nd Connection levels
B brigded connectors

B 3rd Connection levels

3rd Connection levels
B brigded connectors
C access to C rail

C 4th Connection levels

4th Connection levels
C access to C rail
S non-bridged connectors
blank connection level not available

B 5th Connection levels

5th Connection levels
B brigded connectors
blank connection level not available

B 6th Connection levels

6th Connection levels
B brigded connectors
C access to C rail
blank connection level not available

– **B** Additional function

Additional function
B for BR refreshing modules
CJ Internal cold junction compensation
G modules for the redundant power supply of the gateway

Hans Turck GmbH & Co. KG ▪ Tel. +49 208 49 52-0 ▪ Fax +49 208 49 52-264

Type code BL20 – Gateways and electronic modules

BL20 – E – 16 – DO – 24VDC – 0.5A – P

BL20 Product series – **E** Design – **16** Channels –

Product series
BL20 BL20 system

Design
E ECO housing

Number of channels
2 2 channels
4 4 channels
8 8 channels
16 16 channels
32 32 channels

DO Module type – **24VDC** Signal type – **0.5A** Output current –

Module type

AI	analog input module
AIH	analog input module with HART® communication
AO	analog output module
AOH	analog output module with HART® communication
BR	bus refreshing module
CNT	counter module
DI	digital input module
DO	digital output module
GW	gateway
GWBR	gateway
IOL	IO-Link master module
PF	power feeding module
PG	programmable gateway
PWM	PWM module
RFID	RFID interface module
RS232	RS232 communication module
RS485/422	RS485/422 communication module
SSI	SSI (Synchronous Serial Interface) module

Signal type

A	acyclic communication
CANOPEN	CANopen®
CO	CANopen®
DN	DeviceNet™
DNET	DeviceNet™
DP	PROFIBUS-DP
DPV1	PROFIBUS-DP
EC	EtherCAT®
EN	Ethernet
EN-IP	EtherNet/IP™
I	current signal
NAMUR	digital input module for NAMUR sensors
PN	PROFINET
PT/NI	RTDs
R	relay module
S	simplified communication via process data
THERMO	thermocouple
U	voltage signal
U/I	current/voltage signal (adjustable)
24VDC	24 VDC
120/230VAC	120/230 VAC

Output current
0.5A 0.5A output current per channel
2A 2A output current per channel

P Function

Function
CO change over
D extended diagnosis
N NPN
P PNP
PI cold junction compensation
RED redundant power supply
2/3 2-wire/3-wire connection

Gateway for PROFIBUS-DP

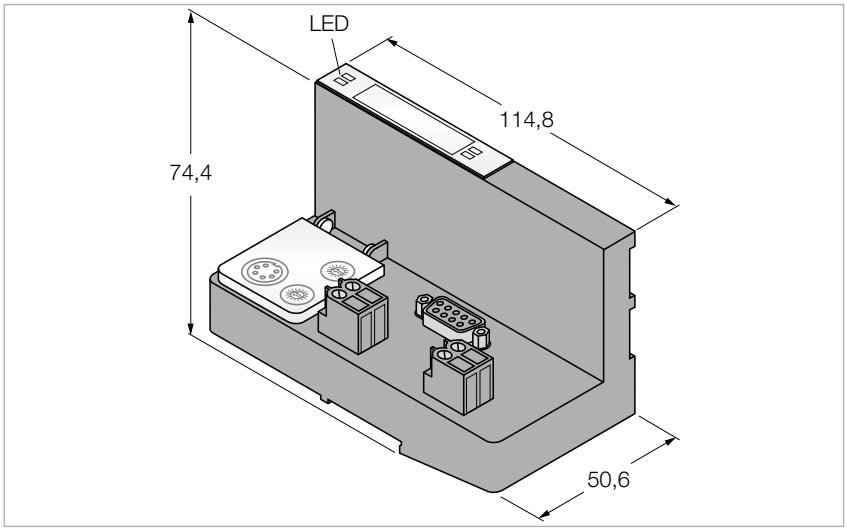

Features

- Rotary coding switch for adjustment of the node address
- Protection class IP20
- 2 x end brackets BL20-WEW35/2-SW
- 1 x end plate BL20-ABPL
- Integrated power supply
- LEDs for display of supply voltage, group and bus errors
- Gateway between the BL20 system and PROFIBUS-DPV0/DPV1
- 12 Mbps
- 9-pin sub-D female connector

Pinning overview

Position	Note	Pinning assignment
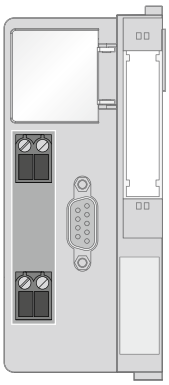	**Power supply** The U_{SYS} system supply feeds power to the gateway and the I/O modules. The U_L field supply feeds power to the sensors and actuators.	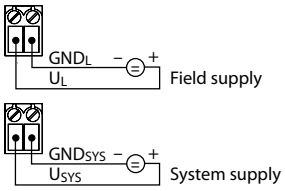
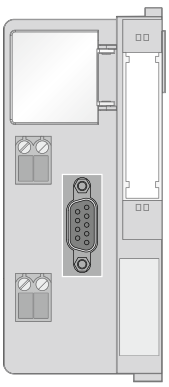	**PROFIBUS-DP** Fieldbus cable (example): D9T451-2M (ident no. 6915759) or RSSW-D9T451-2M (ident no. 6915779)	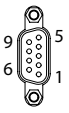 1 = shield 2 = n.c. 3 = RD (Bus B) 4 = n.c. 5 = GND 6 = 5 VDC 7 = n.c. 8 = GN (Bus A) 9 = n.c.

Technical data

Type	BL20-GW-DPV1
Ident no.	6827234
Power supply	
Supply voltage	24 VDC
Operating voltage range	18…30 VDC
Max. system supply current	1.2 A
Max. field supply current	10 A
Nominal current from module bus	≤ 430 mA
Voltage supply connection	screw terminals
System data	
Fieldbus transmission rate	9.6 kbps … 12 Mbps
Fieldbus addressing	2 rotary switches
Fieldbus address range	1…99
Fieldbus connection technology	1 x female sub-D connector
Fieldbus termination	external
Max. number of I/O modules	64
Service interface	PS/2 socket
Environmental conditions	
Ambient temperature	0…+55 °C
Relative humidity	≤ 5 to 95 % (internal), Level RH-2, no condensation (at 45 °C storage)
Storage temperature	-25…+85 °C
Vibration test	acc. to EN 61131
Shock test	acc. to IEC 68-2-27
Drop and topple	acc. to IEC 68-2-31 and free fall to IEC 68-2-32
Electro-magnetic compatibility	acc. to EN 61131-2
Mechanical data	
Protection class	IP20
Dimensions	50.6 x 114.8 x 74.4 mm
Accessories	
Included in delivery	2 x end brackets BL20-WEW-35/2-SW, 1 x end plate BL20-ABPL
Approval | Certification	ATEX, IECEx, $_{c}$UL$_{us}$, $_{c}$FM$_{us}$, GOST

Gateway for PROFIBUS-DP

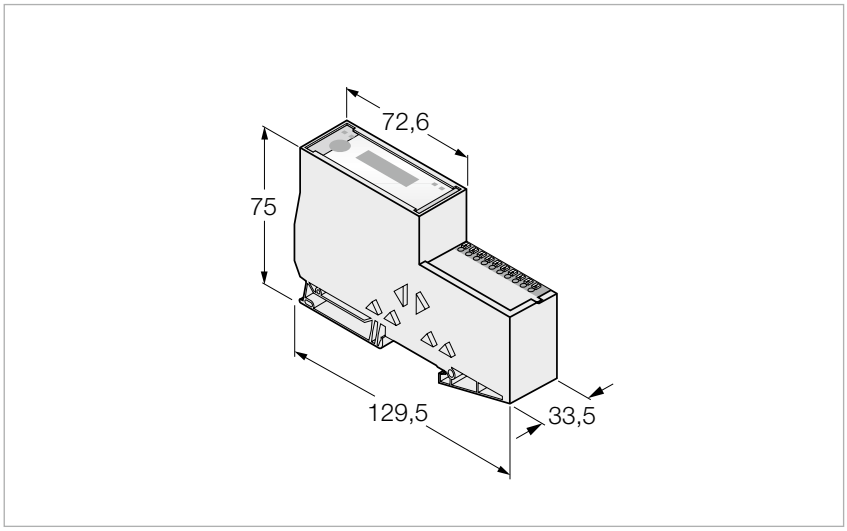

Features

- DIP switch for adjustment of the node address
- Protection class IP20
- 2 x end brackets BL20-WEW35/2-SW
- 1 x end plate BL20-ABPL
- Integrated power supply
- LEDs for display of supply voltage, group and bus errors
- Gateway between the BL20 system and PROFIBUS-DPV0/DPV1
- 12 Mbps
- Push-in terminals

Pinning overview

Position	Note	Pinning assignment
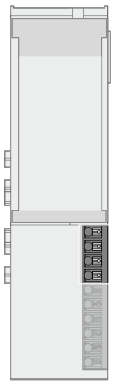	**Power supply** The U_{SYS} system supply feeds power to the gateway and the I/O modules. The U_L field supply feeds power to the sensors and actuators.	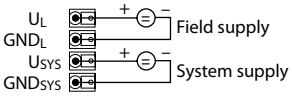
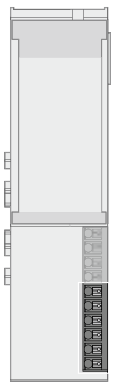	**PROFIBUS-DP** Fieldbus cable (example): D9T451-2M (ident no. 6915759) or RSSW-451-2M (ident no. 6914229)	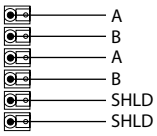

Technical data

Type	BL20-E-GW-DP
Ident no.	6827250
Power supply	
Supply voltage	24 VDC
Operating voltage range	18…30 VDC
Max. system supply current	1 A
Max. field supply current	8 A
Nominal current from module bus	≤ 400 mA
Voltage supply connection	Push-in terminals
System data	
Fieldbus transmission rate	9.6 kbps … 12 Mbps
Fieldbus addressing	via DIP switch
Fieldbus address range	1…126
Fieldbus connection technology	Push-in terminals
Fieldbus termination	via DIP switch
Max. number of I/O modules	48
Service interface	PS/2 socket
Environmental conditions	
Ambient temperature	0…+55 °C
Relative humidity	≤ 5 to 95 % (internal), Level RH-2, no condensation (at 45 °C storage)
Storage temperature	-25…+85 °C
Vibration test	acc. to EN 61131
Shock test	acc. to IEC 68-2-27
Drop and topple	acc. to IEC 68-2-31 and free fall to IEC 68-2-32
Electro-magnetic compatibility	acc. to EN 61131-2
Mechanical data	
Protection class	IP20
Dimensions	33.5 x 129.5 x 74.4 mm
Accessories	
Included in delivery	2 x end brackets BL20-WEW-35/2-SW, 1 x end plate BL20-ABPL
Approval | Certification	ATEX, IECEx, $_{c}$UL$_{us}$, $_{c}$FM$_{us}$, GOST

Gateway for CANopen

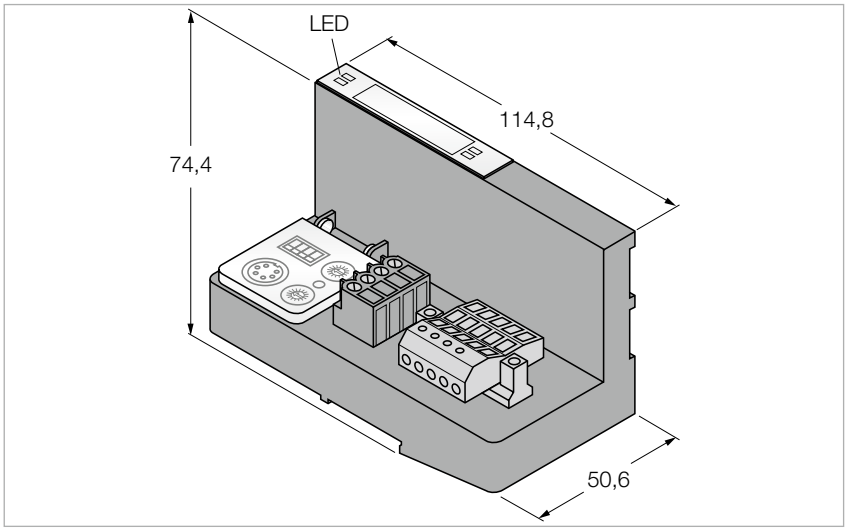

Features

- Rotary coding switch for adjustment of the node address
- Protection class IP20
- 2 x end brackets BL20-WEW35/2-SW
- 1 x end plate BL20-ABPL
- 1 x open style connector
- Integrated power supply
- LEDs for display of supply voltage, group and bus errors
- Gateway between the BL20 system and CANopen
- 20 kbps up to 1000 kbps
- The connection to CANopen is established via an open-style connector

Pinning overview

Position	Note	Pinning assignment
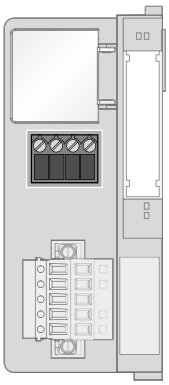	**Power supply** The U_{SYS} system supply feeds power to the gateway and the I/O modules. The U_L field supply feeds power to the sensors and actuators.	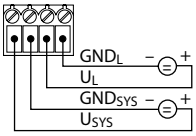
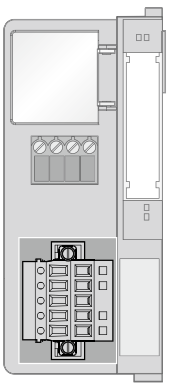	**CANopen** Fieldbus cable (example): CBC5-572-2M (ident no. 6606065) or RKC5701-5M (ident no. 6931035)	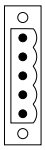

Technical data

Type	BL20-GWBR-CANOPEN
Ident no.	6827167
Power supply	
Supply voltage	24 VDC
Operating voltage range	18…30 VDC
Max. system supply current	1.2 A
Max. field supply current	10 A
Nominal current from module bus	≤ 350 mA
Voltage supply connection	screw terminals
System data	
Fieldbus transmission rate	20 kbps … 1 Mbps
Fieldbus addressing	2 rotary switches
Fieldbus address range	1…99
Fieldbus connection technology	open style connector
Fieldbus termination	external
Max. number of I/O modules	74
Service interface	PS/2 socket
Environmental conditions	
Ambient temperature	0…+55 °C
Relative humidity	≤ 5 to 95 % (internal), Level RH-2, no condensation (at 45 °C storage)
Storage temperature	-25…+85 °C
Vibration test	acc. to EN 61131
Shock test	acc. to IEC 68-2-27
Drop and topple	acc. to IEC 68-2-31 and free fall to IEC 68-2-32
Electro-magnetic compatibility	acc. to EN 61131-2
Mechanical data	
Protection class	IP20
Dimensions	50.6 x 114.8 x 74.4 mm
Accessories	
Included in delivery	2 x end brackets BL20-WEW-35/2-SW, 1 x end plate BL20-ABPL, 1 x open style connector
Approval | Certification	ATEX, IECEx, $_{c}$UL$_{us}$, $_{c}$FM$_{us}$, GOST

Gateway for CANopen

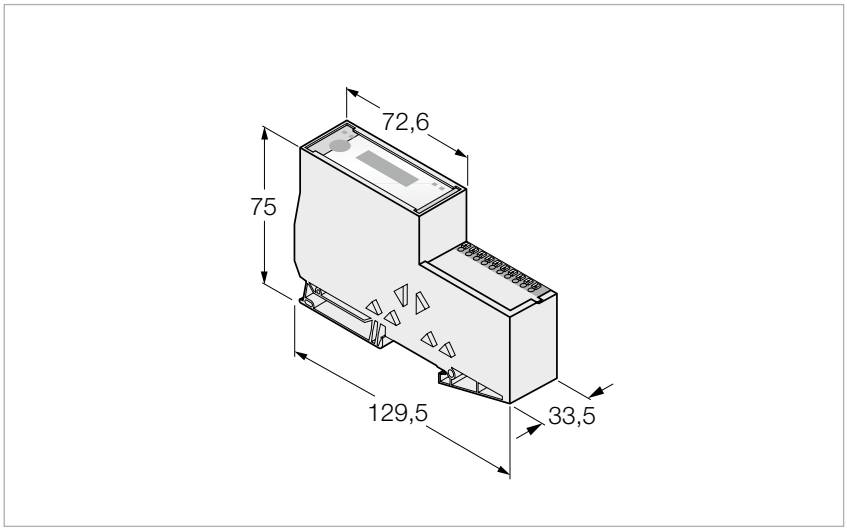

Features

- DIP switch for adjustment of the node address
- Protection class IP20
- 2 x end brackets BL20-WEW35/2-SW
- 1 x end plate BL20-ABPL
- Integrated power supply
- LEDs for display of supply voltage, group and bus errors
- Gateway between the BL20 system and CANopen
- 1 Mbps
- Push-in terminals

Pinning overview

Position	Note	Pinning assignment
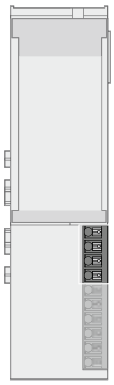	**Power supply** The U_{SYS} system supply feeds power to the gateway and the I/O modules. The U_L field supply feeds power to the sensors and actuators.	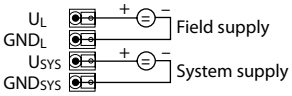
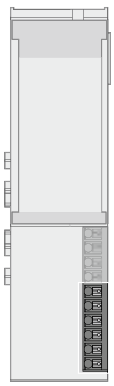	**CANopen** Fieldbus cable (example): CBC5-572-2M (ident no. 6606065) or RKC5701-5M (ident no. 6931035)	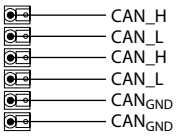

Technical data

Type	BL20-E-GW-CO
Ident no.	6827252
Power supply	
Supply voltage	24 VDC
Operating voltage range	18…30 VDC
Max. system supply current	0.7 A
Max. field supply current	8 A
Nominal current from module bus	≤ 350 mA
Voltage supply connection	Push-in terminals
System data	
Fieldbus transmission rate	20 kbps … 1 Mbps
Fieldbus addressing	via DIP switch
Fieldbus address range	1…63
Fieldbus connection technology	Push-in terminals
Fieldbus termination	via DIP switch
Max. number of I/O modules	62
Service interface	PS/2 socket
Environmental conditions	
Ambient temperature	0…+55 °C
Relative humidity	≤ 5 to 95 % (internal), Level RH-2, no condensation (at 45 °C storage)
Storage temperature	-25…+85 °C
Vibration test	acc. to EN 61131
Shock test	acc. to IEC 68-2-27
Drop and topple	acc. to IEC 68-2-31 and free fall to IEC 68-2-32
Electro-magnetic compatibility	acc. to EN 61131-2
Mechanical data	
Protection class	IP20
Dimensions	33.5 x 129.5 x 74.4 mm
Accessories	
Included in delivery	2 x end brackets BL20-WEW-35/2-SW, 1 x end plate BL20-ABPL
Approval | Certification	ATEX, IECEx, $_{c}$UL$_{us}$, $_{c}$FM$_{us}$, GOST

Gateway for DeviceNet™

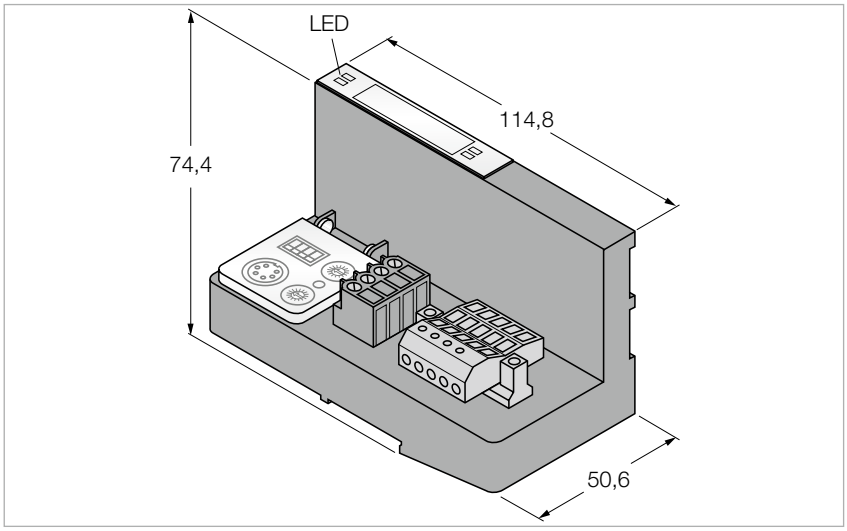

Features

- Rotary coding switch for adjustment of the node address
- Protection class IP20
- 2 x end brackets BL20-WEW35/2-SW
- 1 x end plate BL20-ABPL
- 1 x open style connector
- Integrated power supply
- LEDs for display of supply voltage, group and bus errors
- Gateway between the BL20 system and DeviceNet™
- 125 / 250 / 500 kbps
- The connection to DeviceNet™ is established via an open-style connector

Pinning overview

Position	Note	Pinning assignment
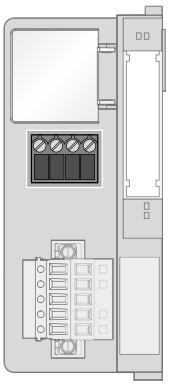	**Power supply** The U_{SYS} system supply feeds power to the gateway and the I/O modules. The U_L field supply feeds power to the sensors and actuators.	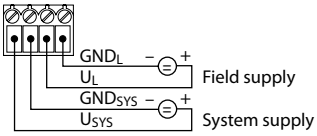
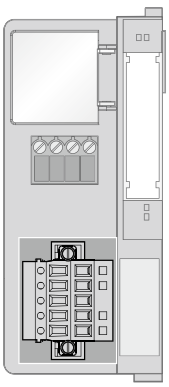	**DeviceNet™** Fieldbus cable (example): CBC5-572-2M (ident no. 6606065) or RKC5701-5M (ident no. 6931035)	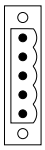

Technical data

Type	BL20-GWBR-DNET
Ident no.	6827168
Power supply	
Supply voltage	24 VDC
Operating voltage range	18…30 VDC
Max. system supply current	1.2 A
Max. field supply current	10 A
Nominal current from module bus	≤ 250 mA
Voltage supply connection	screw terminals
System data	
Fieldbus transmission rate	125 / 250 / 500 kbps
Fieldbus addressing	2 rotary switches
Fieldbus address range	0…63
Fieldbus connection technology	open style connector
Fieldbus termination	external
Max. number of I/O modules	74
Service interface	PS/2 socket
Environmental conditions	
Ambient temperature	0…+55 °C
Relative humidity	≤ 5 to 95 % (internal), Level RH-2, no condensation (at 45 °C storage)
Storage temperature	-25…+85 °C
Vibration test	acc. to EN 61131
Shock test	acc. to IEC 68-2-27
Drop and topple	acc. to IEC 68-2-31 and free fall to IEC 68-2-32
Electro-magnetic compatibility	acc. to EN 61131-2
Mechanical data	
Protection class	IP20
Dimensions	50.6 x 114.8 x 74.4 mm
Accessories	
Included in delivery	2 x end brackets BL20-WEW-35/2-SW, 1 x end plate BL20-ABPL, 1 x open style connector
Approval | Certification	ATEX, IECEx, $_{c}$UL$_{us}$, $_{c}$FM$_{us}$, GOST

Gateway for DeviceNet™

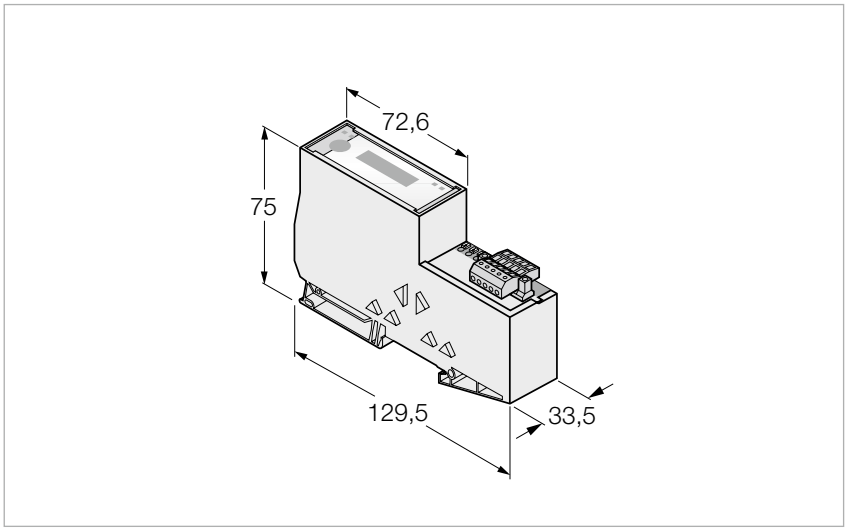

Features

- DIP switch for adjustment of the node address
- Protection class IP20
- 2 x end brackets BL20-WEW35/2-SW
- 1 x end plate BL20-ABPL
- 1 x open style connector
- Integrated power supply
- LEDs for display of supply voltage, group and bus errors
- Gateway between the BL20 system and DeviceNet™
- 125 / 250 / 500 kbps
- The connection to DeviceNet™ is established via an open-style connector

Pinning overview

Position	Note	Pinning assignment
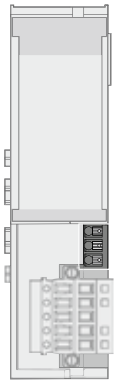	**Power supply** The U_{SYS} system supply feeds power to the gateway and the I/O modules. The U_L field supply feeds power to the sensors and actuators.	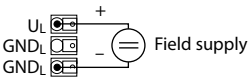
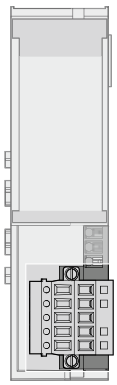	**DeviceNet™** Fieldbus cable (example): CBC5-572-2M (ident no. 6606065) or RKC5701-5M (ident no. 6931035)	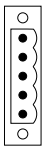

Technical data

Type	BL20-E-GW-DN
Ident no.	6827301
Power supply	
Supply voltage	24 VDC
Operating voltage range	18…30 VDC
Max. system supply current	0.7 A
Max. field supply current	8 A
Nominal current from module bus	≤ 250 mA
Voltage supply connection	Push-in terminals
System data	
Fieldbus transmission rate	125…500 kbps
Fieldbus addressing	via DIP switch
Fieldbus address range	0…63
Fieldbus connection technology	open style connector
Fieldbus termination	via DIP switch
Max. number of I/O modules	62
Service interface	PS/2 socket
Environmental conditions	
Ambient temperature	0…+55 °C
Relative humidity	≤ 5 to 95 % (internal), Level RH-2, no condensation (at 45 °C storage)
Storage temperature	-25…+85 °C
Vibration test	acc. to EN 61131
Shock test	acc. to IEC 68-2-27
Drop and topple	acc. to IEC 68-2-31 and free fall to IEC 68-2-32
Electro-magnetic compatibility	acc. to EN 61131-2
Mechanical data	
Protection class	IP20
Dimensions	33.5 x 129.5 x 74.4 mm
Accessories	
Included in delivery	2 x end brackets BL20-WEW-35/2-SW, 1 x end plate BL20-ABPL, 1 x open style connector
Approval | Certification	ATEX, IECEx, $_{c}$UL$_{us}$, $_{c}$FM$_{us}$, GOST

Gateway for Modbus RTU / ASCII

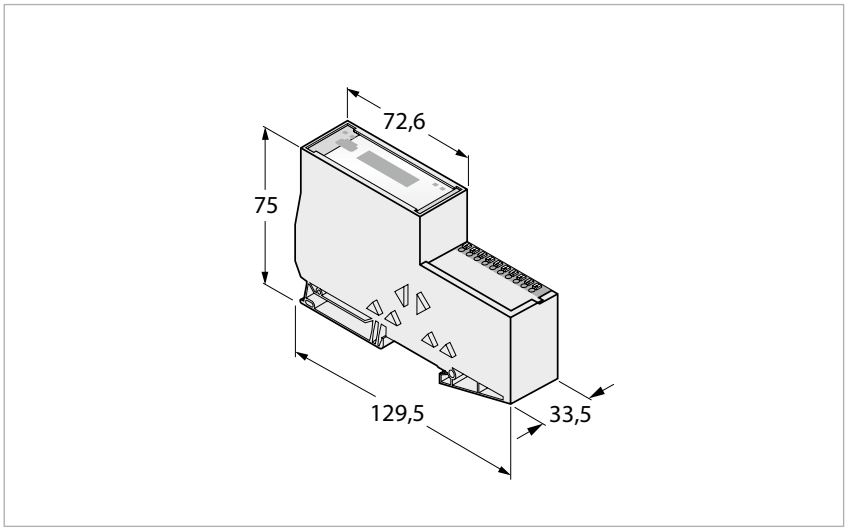

Features

- DIP switch for adjustment of the node address
- Protection class IP20
- 2 x end brackets BL20-WEW35/2-SW
- 1 x end plate BL20-ABPL
- LEDs for display of supply voltage, group and bus errors
- Gateway between the BL20 system and Modbus RTU / ASCII
- RS485 or RS232, configurable
- 9.6 kbps … 115.2 kbps
- Push-in terminals
- Circuit boards with conformal coating

Pinning overview

Position	Note	Pinning assignment
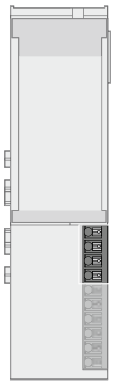	**Power supply** The U_{SYS} system supply feeds power to the gateway and the I/O modules. The U_L field supply feeds power to the sensors and actuators.	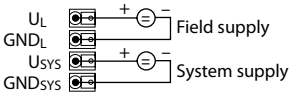
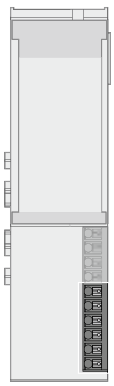	**Modbus RTU/ASCII** Fieldbus cable for RS485 (example): RSC5701-5M (ident no. 6931036)	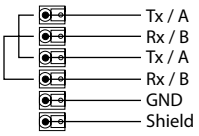

Technical data

Type	BL20-E-GW-RS-MB/ET
Ident no.	6827381
Power supply	
Supply voltage	24 VDC
Operating voltage range	18…30 VDC
Max. system supply current	0.7 A
Max. field supply current	8 A
Nominal current from module bus	≤ 200 mA
Voltage supply connection	Push-in terminals
System data	
Fieldbus transmission rate	9.6 kbps … 115.2 kbps
Fieldbus addressing	via DIP switch, I/O-ASSISTANT
Fieldbus address range	1…31 (via DIP switch)1…247 (via I/O-ASSISTANT)
Fieldbus connection technology	Push-in terminals
Fieldbus termination	via DIP switch
Max. number of I/O modules	32
Service interface	Mini USB
Environmental conditions	
Ambient temperature	-25…+60 °C
Relative humidity	≤ 15 to 95 % (internal), Level RH-2, no condensation (at 45 °C storage)
Storage temperature	-25…+70 °C
Vibration test	acc. to EN 61131
Shock test	acc. to IEC 68-2-27
Drop and topple	acc. to IEC 68-2-31 and free fall to IEC 68-2-32
Electro-magnetic compatibility	acc. to EN 61131-2
Mechanical data	
Protection class	IP20
Dimensions	33.5 x 129.5 x 74.4 mm
Accessories	
Included in delivery	2 x end brackets BL20-WEW-35/2-SW, 1 x end plate BL20-ABPL
Approval | Certification	$_{c}UL_{us}$, GOST

Gateway for PROFINET, EtherNet/IP™ and Modbus TCP

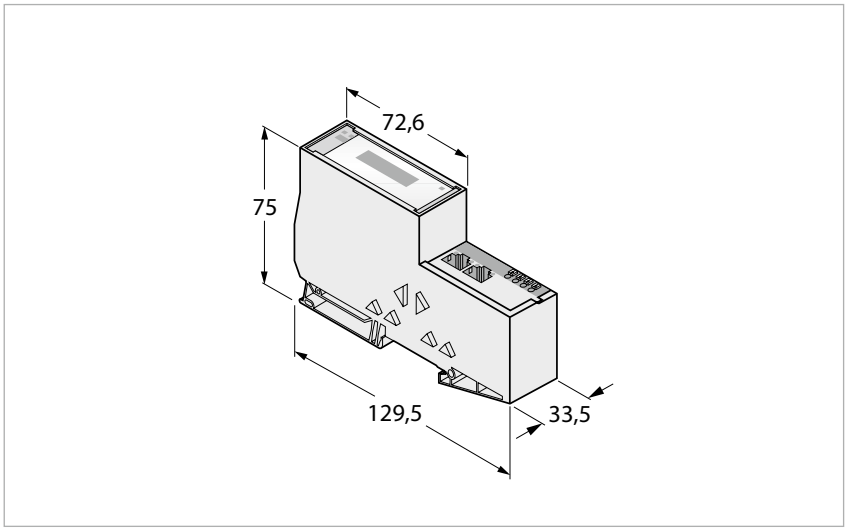

Features

- Protection class IP20
- 2 x end brackets BL20-WEW35/2-SW
- 1 x end plate BL20-ABPL
- LEDs for display of supply voltage, group and bus errors
- Multiprotocol gateway between the BL20 system and the Ethernet protocols Modbus TCP, EtherNet/IP™ and PROFINET (from VN 03-00)
- PROFINET supports fast start-up (FSU)
- EtherNet/IP™ supports QuickConnect (QC)
- Integrated switch 10/100 Mbps
- Two RJ45 ports for fieldbus connection
- Push-in terminals for connection of power supply

Pinning overview

Position	Note	Pinning assignment
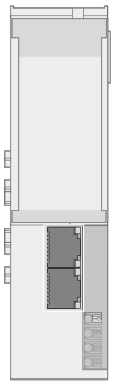	**Ethernet** Fieldbus cable (example): RJ45S-RJ45S-441-2M (ident no. 6932517) or RJ45-FKSDD-441-0.5M/S2174 (ident no. 6914221)	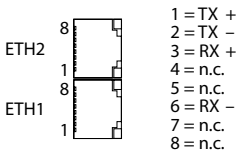
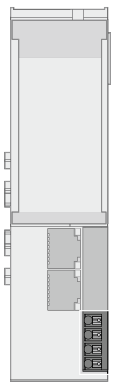	**Power supply** The U_{SYS} system supply feeds power to the gateway and the I/O modules. The U_L field supply feeds power to the sensors and actuators.	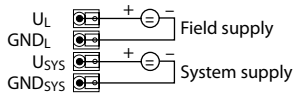

Technical data

Type	BL20-E-GW-EN
Ident no.	6827329

Power supply	
Supply voltage	24 VDC
Operating voltage range	18…30 VDC
Max. system supply current	0.4 A
Max. field supply current	8 A
Nominal current from module bus	≤ 200 mA
Voltage supply connection	Push-in terminals

System data	
Fieldbus transmission rate	10/100 Mbps, Full/Half Duplex, Auto Negotiation, Auto Crossing
Max. number of I/O modules	31
Connection technology Ethernet	2 x RJ45, female
Protocol detection	automatic
Web server	192.168.1.254 (Default)
Service interface	Ethernet

Modbus TCP	
Addressing	Static IP, BOOTP, DHCP
Supported function codes	FC1, FC2, FC3, FC4, FC5, FC6, FC15, FC16, FC23
Simultaneous connections	8
Input Data Size	max. 1024 register
Input register start address	0 (0x0000 hex)
Output Data Size	max. 1024 register
Output register start address	2048 (0x0800 hex)

EtherNet/IP™	
Addressing	acc. to EtherNet/IP™ specification
Device Level Ring (DLR)	supported
Simultaneous CIP connections	8

PROFINET	
Addressing	DCP
Conformance Class	B (RT)
MinCycleTime	1 ms
Diagnostics	acc. to PROFINET alarm handling
Topology detection	supported
Automatic addressing	supported

Environmental conditions	
Ambient temperature	0…+55 °C
Relative humidity	≤ 5 to 95 % (internal), Level RH-2, no condensation (at 45 °C storage)
Storage temperature	-25…+85 °C
Vibration test	acc. to EN 61131
Shock test	acc. to IEC 68-2-27
Drop and topple	acc. to IEC 68-2-31 and free fall to IEC 68-2-32
Electro-magnetic compatibility	acc. to EN 61131-2

Mechanical data	
Protection class	IP20
Dimensions	33.5 x 129.5 x 74.4 mm

Accessories	
Included in delivery	2 x end brackets BL20-WEW-35/2-SW, 1 x end plate BL20-ABPL

Approval | Certification	ATEX, IECEx, $_{c}$UL$_{us}$, $_{c}$FM$_{us}$, GOST

Gateway for PROFINET (IRT)

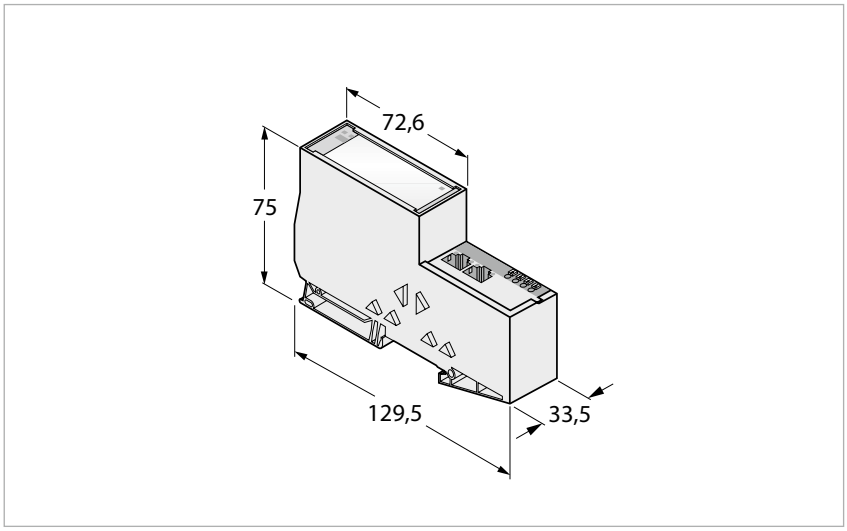

Features

- Protection class IP20
- 2 x end brackets BL20-WEW35/2-SW
- 1 x end plate BL20-ABPL
- LEDs for display of supply voltage, group and bus errors
- Gateway between the BL20 system and PROFINET (IRT)
- Supports topology recognition and LLDP
- 10/100 Mbps, Auto MDIX
- 2 x RJ45 port

Pinning overview

Position	Note	Pinning assignment
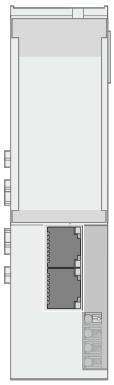	**PROFINET** Fieldbus cable (example): RJ45S-RJ45S-441-2M (ident no. 6932517) or RJ45-FKSDD-441-0.5M/S2174 (ident no. 6914221)	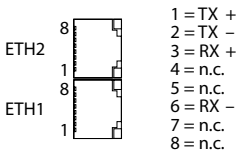
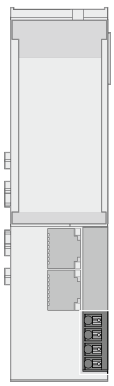	**Power supply** The U_{SYS} system supply feeds power to the gateway and the I/O modules. The U_L field supply feeds power to the sensors and actuators.	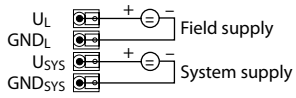

Technical data

Type	BL20-E-GW-PN
Ident no.	6827377
Power supply	
Supply voltage	24 VDC
Operating voltage range	18…30 VDC
Max. system supply current	0.8 A
Max. field supply current	8 A
Nominal current from module bus	≤ 200 mA
Voltage supply connection	Push-in terminals
System data	
Fieldbus transmission rate	10/100 Mbps, Full/Half Duplex, Auto Negotiation, Auto Crossing
Max. number of I/O modules	72
Connection technology Ethernet	2 x RJ45, female
Service interface	Mini USB
PROFINET	
Addressing	DCP
Conformance Class	C (IRT)
MinCycleTime	1 ms
Diagnostics	acc. to PROFINET alarm handling
Topology detection	supported
Automatic addressing	supported
Media Redundancy Protocol (MRP)	supported
Environmental conditions	
Ambient temperature	0…+55 °C
Relative humidity	≤ 5 to 95 % (internal), Level RH-2, no condensation (at 45 °C storage)
Storage temperature	-25…+85 °C
Vibration test	acc. to EN 61131
Shock test	acc. to IEC 68-2-27
Drop and topple	acc. to IEC 68-2-31 and free fall to IEC 68-2-32
Electro-magnetic compatibility	acc. to EN 61131-2
Mechanical data	
Protection class	IP20
Dimensions	33.5 x 129.5 x 74.4 mm
Accessories	
Included in delivery	2 x end brackets BL20-WEW-35/2-SW, 1 x end plate BL20-ABPL
Approval | Certification	$_{c}UL_{us}$, GOST

Gateway for EtherCAT®

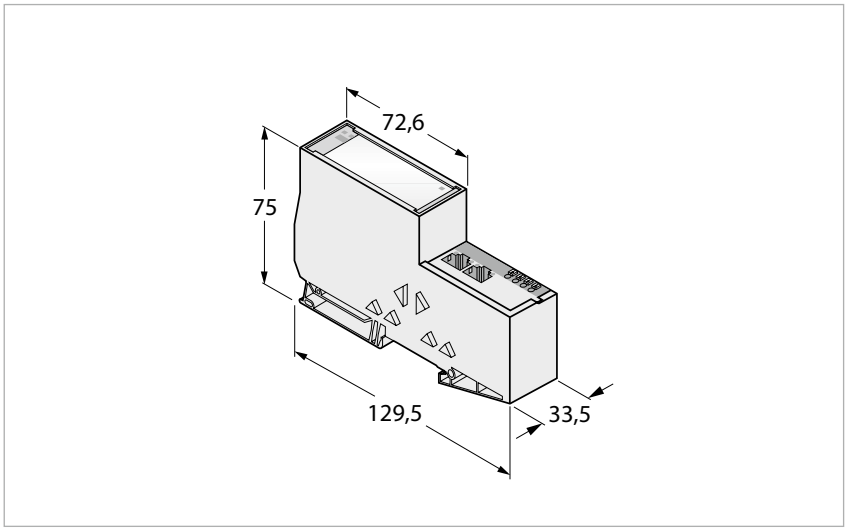

Features

- Protection class IP20
- 2 x end brackets BL20-WEW35/2-SW
- 1 x end plate BL20-ABPL
- LEDs for display of supply voltage, group and bus errors
- Gateway between the BL20 system and EtherCAT®
- Modular Device Profile (MDP) supported
- 10/100 Mbps, Auto MDIX
- 2 x RJ45 port

Pinning overview

Position	Note	Pinning assignment
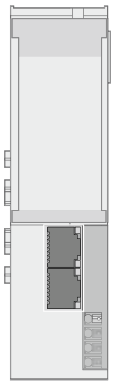	**EtherCAT®** Fieldbus cable (example): RJ45S-RJ45S-441-2M (ident no. 6932517) or RJ45-FKSDD-441-0.5M/S2174 (ident no. 6914221)	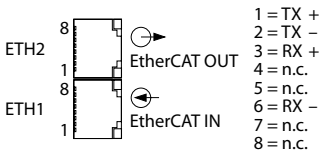
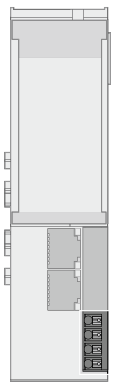	**Power supply** The U_{SYS} system supply feeds power to the gateway and the I/O modules. The U_L field supply feeds power to the sensors and actuators.	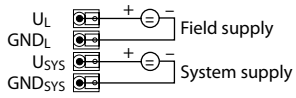

Technical data

Type	BL20-E-GW-EC
Ident no.	6827380
Power supply	
Supply voltage	24 VDC
Operating voltage range	18…30 VDC
Max. system supply current	0.8 A
Max. field supply current	8 A
Nominal current from module bus	≤ 200 mA
Voltage supply connection	Push-in terminals
System data	
Fieldbus transmission rate	10/100 Mbps, Full/Half Duplex, Auto Negotiation, Auto Crossing
Max. number of I/O modules	72
Connection technology Ethernet	2 x RJ45, female
Service interface	Mini USB
EtherCAT®	
Address allocation	automatic
MinCycleTime	250 µs
Diagnostics	CoE Emergencies, DiagnosisHistory
CAN over EtherCAT	acc. to modular device profile
Environmental conditions	
Ambient temperature	0…+55 °C
Relative humidity	≤ 5 to 95 % (internal), Level RH-2, no condensation (at 45 °C storage)
Storage temperature	-25…+85 °C
Vibration test	acc. to EN 61131
Shock test	acc. to IEC 68-2-27
Drop and topple	acc. to IEC 68-2-31 and free fall to IEC 68-2-32
Electro-magnetic compatibility	acc. to EN 61131-2
Mechanical data	
Protection class	IP20
Dimensions	33.5 x 129.5 x 74.4 mm
Accessories	
Included in delivery	2 x end brackets BL20-WEW-35/2-SW, 1 x end plate BL20-ABPL
Approval | Certification	$_{c}UL_{us}$, GOST

Gateway for Modbus TCP

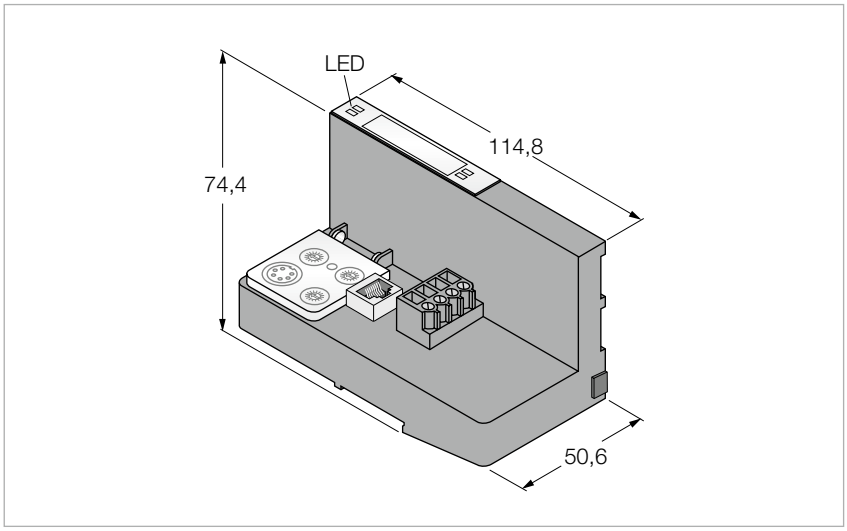

Features

- Rotary coding switch to adjust the node address
- Protection class IP20
- 2 x end brackets BL20-WEW35/2-SW
- 1 x end plate BL20-ABPL
- Integrated power supply
- LEDs for display of supply voltage, group and bus errors
- Gateway between the BL20 system and Modbus TCP
- 10/100 Mbps
- RJ45 port

Pinning overview

Position	Note	Pinning assignment
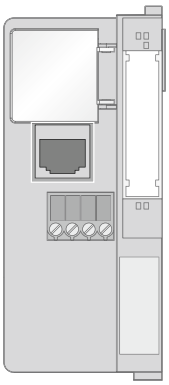	**Modbus TCP** Fieldbus cable (example): RJ45S-RJ45S-441-2M (ident no. 6932517) or RJ45-FKSDD-441-0.5M/S2174 (ident no. 6914221)	 1 = TX + 2 = TX – 3 = RX + 4 = n.c. 5 = n.c. 6 = RX – 7 = n.c. 8 = n.c.
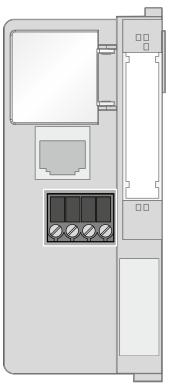	**Power supply** The U_{SYS} system supply feeds power to the gateway and the I/O modules. The U_L field supply feeds power to the sensors and actuators.	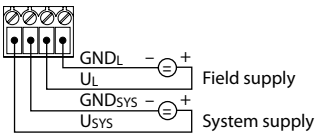

Technical data

Type	BL20-GW-EN
Ident no.	6827237
Power supply	
Supply voltage	24 VDC
Operating voltage range	18…30 VDC
Max. system supply current	1.2 A
Max. field supply current	10 A
Nominal current from module bus	≤ 500 mA
Voltage supply connection	screw terminals
System data	
Fieldbus transmission rate	10/100 Mbps, Full/Half Duplex, Auto Negotiation, Auto Crossing
Fieldbus addressing	Rotary switch, BOOTP, DHCP, IO-ASSISTANT
Fieldbus connection technology	RJ45 port
Max. number of I/O modules	74
Web server	192.168.1.254 (Default)
Service interface	PS/2 socket
Environmental conditions	
Ambient temperature	0…+55 °C
Relative humidity	≤ 5 to 95 % (internal), Level RH-2, no condensation (at 45 °C storage)
Storage temperature	-25…+85 °C
Vibration test	acc. to EN 61131
Shock test	acc. to IEC 68-2-27
Drop and topple	acc. to IEC 68-2-31 and free fall to IEC 68-2-32
Electro-magnetic compatibility	acc. to EN 61131-2
Mechanical data	
Protection class	IP20
Dimensions	50.6 x 114.8 x 74.4 mm
Accessories	
Included in delivery	2 x end brackets BL20-WEW-35/2-SW, 1 x end plate BL20-ABPL
Approval | Certification	ATEX, IECEx, $_{c}UL_{us}$, $_{c}FM_{us}$, GOST

Gateway for EtherNet/IP™

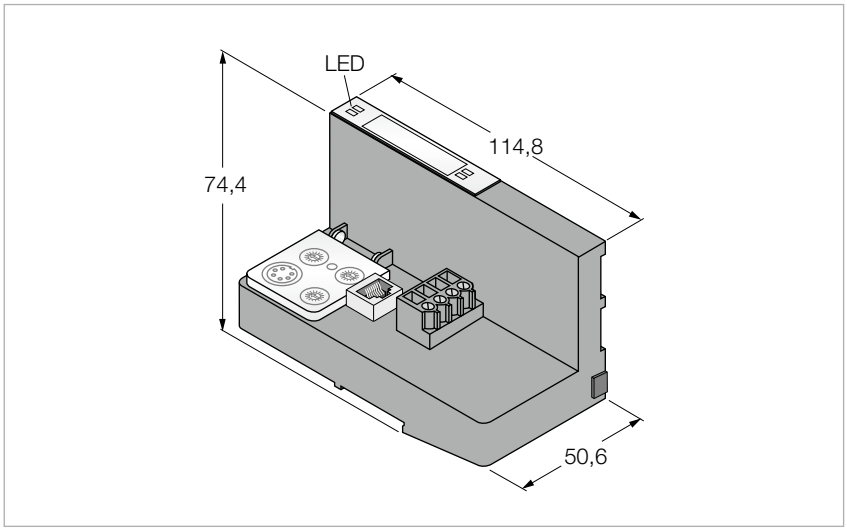

Features

- Rotary coding switch to adjust the node address
- Protection class IP20
- 2 x end brackets BL20-WEW35/2-SW
- 1 x end plate BL20-ABPL
- Integrated power supply
- LEDs for display of supply voltage, group and bus errors
- Gateway between the BL20 system and EtherNet/IP™
- 10/100 Mbps
- RJ45 port

Pinning overview

Position	Note	Pinning assignment
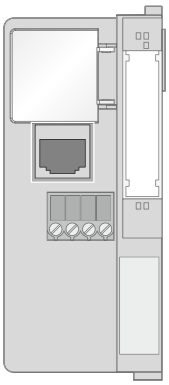	**EtherNet/IP™** Fieldbus cable (example): RJ45S-RJ45S-441-2M (ident no. 6932517) or RJ45-FKSDD-441-0.5M/S2174 (ident no. 6914221)	 1 = TX + 2 = TX – 3 = RX + 4 = n.c. 5 = n.c. 6 = RX – 7 = n.c. 8 = n.c.
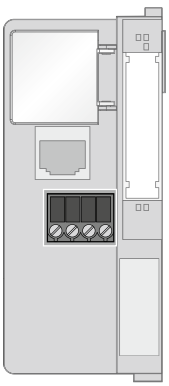	**Power supply** The U_{SYS} system supply feeds power to the gateway and the I/O modules. The U_L field supply feeds power to the sensors and actuators.	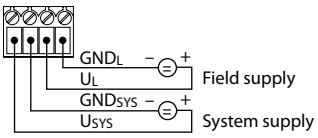

Technical data

Type	BL20-GW-EN-IP
Ident no.	6827247
Power supply	
Supply voltage	24 VDC
Operating voltage range	18…30 VDC
Max. system supply current	1.2 A
Max. field supply current	10 A
Nominal current from module bus	≤ 500 mA
Voltage supply connection	screw terminals
System data	
Fieldbus transmission rate	10/100 Mbps, Full/Half Duplex, Auto Negotiation, Auto Crossing
Fieldbus addressing	Rotary switch, BOOTP, DHCP, IO-ASSISTANT
Fieldbus connection technology	RJ45 port
Max. number of I/O modules	74
Web server	192.168.1.254 (Default)
Service interface	PS/2 socket
Environmental conditions	
Ambient temperature	0…+55 °C
Relative humidity	≤ 5 to 95 % (internal), Level RH-2, no condensation (at 45 °C storage)
Storage temperature	-25…+85 °C
Vibration test	acc. to EN 61131
Shock test	acc. to IEC 68-2-27
Drop and topple	acc. to IEC 68-2-31 and free fall to IEC 68-2-32
Electro-magnetic compatibility	acc. to EN 61131-2
Mechanical data	
Protection class	IP20
Dimensions	50.6 x 114.8 x 74.4 mm
Accessories	
Included in delivery	2 x end brackets BL20-WEW-35/2-SW, 1 x end plate BL20-ABPL
Approval | Certification	ATEX, IECEx, $_{c}UL_{us}$, $_{c}FM_{us}$, GOST

CODESYS programmable gateway for Modbus TCP

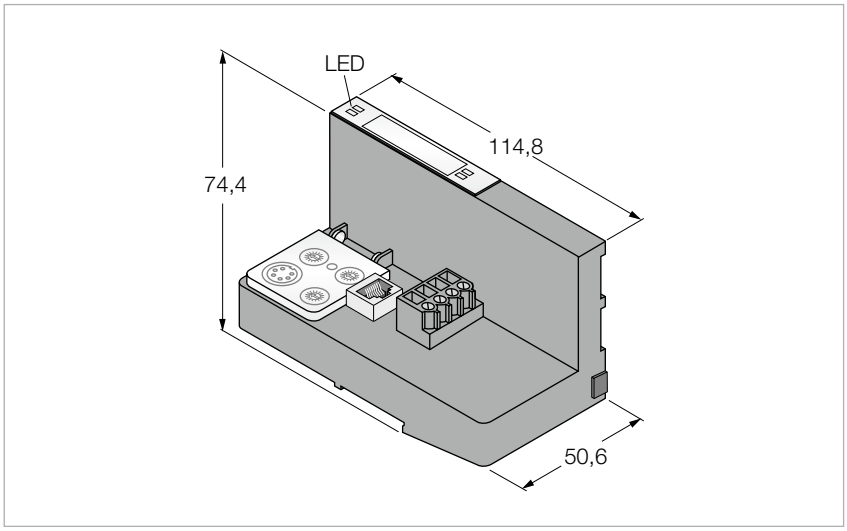

Features

- CODESYS programmable acc. to IEC 61131-3
- Ethernet and RS232 programming interface
- 512 kB program memory
- 32 bit RISC processor
- < 1 ms for 1000 commands
- 3 decimal rotary coding switches
- Protection class IP20
- Integrated power supply
- LEDs for display of supply voltage, group and bus errors
- Gateway between the BL20 system and Modbus TCP
- 10/100 Mbps

Pinning overview

Position	Note	Pinning assignment
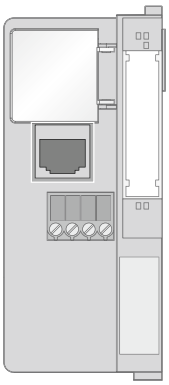	**Modbus TCP** Fieldbus cable (example): RJ45S-RJ45S-441-2M (ident no. 6932517) or RJ45-FKSDD-441-0.5M/S2174 (ident no. 6914221)	 1 = TX + 2 = TX – 3 = RX + 4 = n.c. 5 = n.c. 6 = RX – 7 = n.c. 8 = n.c.
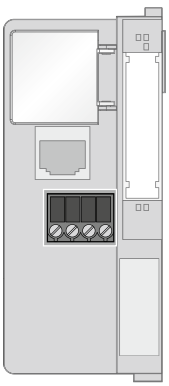	**Power supply** The U_{SYS} system supply feeds power to the gateway and the I/O modules. The U_L field supply feeds power to the sensors and actuators.	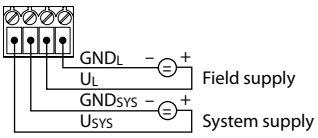

Technical data

Type	BL20-PG-EN
Ident no.	6827249
Power supply	
Supply voltage	24 VDC
Operating voltage range	18…30 VDC
Max. system supply current	1.2 A
Max. field supply current	10 A
Nominal current from module bus	≤ 500 mA
Voltage supply connection	screw terminals
System data	
Fieldbus transmission rate	10/100 Mbps, Full/Half Duplex, Auto Negotiation, Auto Crossing
Fieldbus addressing	Rotary switch, BOOTP, DHCP, IO-ASSISTANT
Fieldbus connection technology	RJ45 port
Max. number of I/O modules	74
Web server	192.168.1.254 (Default)
Service interface	PS/2 socket
PLC data	
Programming	CODESYS V2.3
Released for CODESYS version	V 2.3.9.35
Programming languages	IEC 61131-3 (IL, LD, FBD, SFC, ST)
Application tasks	1
Number of POUs	1024
Programming interface	RS232 interface, Ethernet
Processor	RISC, 32 bit
Cycle time	< 1 ms for 1000 IL commands (without I/O cycle)
Program memory	512 kByte
Data memory	512 kByte
Input data	4 kByte
Output data	4 kByte
Non-volatile memory	16 kByte
Environmental conditions	
Ambient temperature	0…+55 °C
Relative humidity	≤ 5 to 95 % (internal), Level RH-2, no condensation (at 45 °C storage)
Storage temperature	-25…+85 °C
Vibration test	acc. to EN 61131
Shock test	acc. to IEC 68-2-27
Drop and topple	acc. to IEC 68-2-31 and free fall to IEC 68-2-32
Electro-magnetic compatibility	acc. to EN 61131-2
Mechanical data	
Protection class	IP20
Dimensions	50.6 x 114.8 x 74.4 mm
Accessories	
Included in delivery	2 x end brackets BL20-WEW-35/2-SW, 1 x end plate BL20-ABPL
Approval | Certification	ATEX, IECEx, $_{c}$UL$_{us}$, $_{c}$FM$_{us}$, GOST

CODESYS programmable gateway for EtherNet/IP™

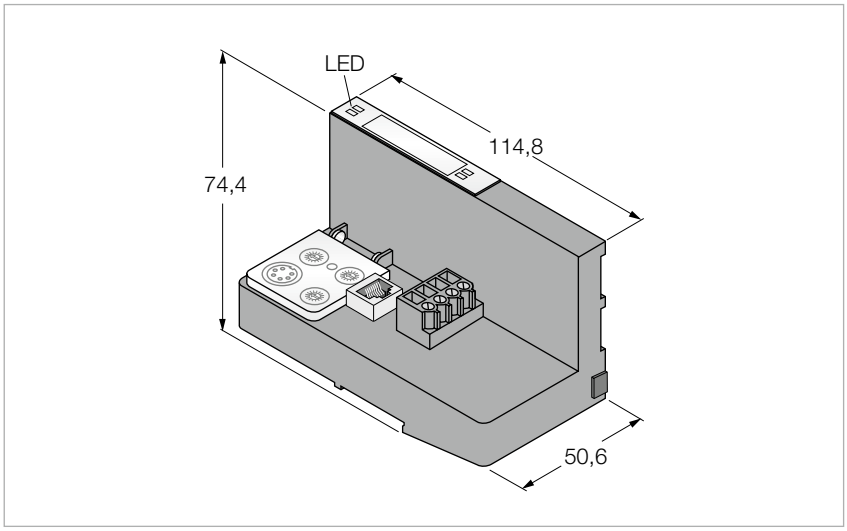

Features

- CODESYS programmable acc. to IEC 61131-3
- Ethernet and RS232 programming interface
- 512 kB program memory
- 32 bit RISC processor
- < 1 ms for 1000 commands
- 3 decimal rotary coding switches
- Protection class IP20
- Integrated power supply
- LEDs for display of supply voltage, group and bus errors
- Gateway between the BL20 system and EtherNet/IP™
- 10/100 Mbps

Pinning overview

Position	Note	Pinning assignment
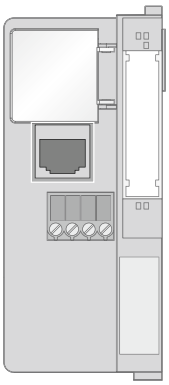	**EtherNet/IP™** Fieldbus cable (example): RJ45S-RJ45S-441-2M (ident no. 6932517) or RJ45-FKSDD-441-0.5M/S2174 (ident no. 6914221)	 1 = TX + 2 = TX – 3 = RX + 4 = n.c. 5 = n.c. 6 = RX – 7 = n.c. 8 = n.c.
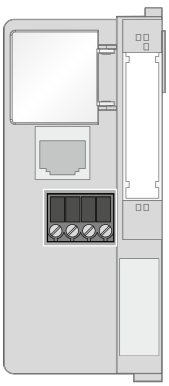	**Power supply** The U_{SYS} system supply feeds power to the gateway and the I/O modules. The U_L field supply feeds power to the sensors and actuators.	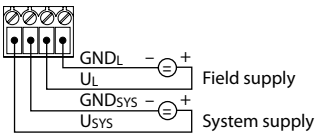

Technical data

Type	BL20-PG-EN-IP
Ident no.	6827248

Power supply	
Supply voltage	24 VDC
Operating voltage range	18…30 VDC
Max. system supply current	1.2 A
Max. field supply current	10 A
Nominal current from module bus	≤ 500 mA
Voltage supply connection	screw terminals

System data	
Fieldbus transmission rate	10/100 Mbps, Full/Half Duplex, Auto Negotiation, Auto Crossing
Fieldbus addressing	Rotary switch, BOOTP, DHCP, IO-ASSISTANT
Fieldbus connection technology	RJ45 port
Max. number of I/O modules	74
Web server	192.168.1.254 (Default)
Service interface	PS/2 socket

PLC data	
Programming	CODESYS V2.3
Released for CODESYS version	V 2.3.9.35
Programming languages	IEC 61131-3 (IL, LD, FBD, SFC, ST)
Application tasks	1
Number of POUs	1024
Programming interface	RS232 interface, Ethernet
Processor	RISC, 32 bit
Cycle time	< 1 ms for 1000 IL commands (without I/O cycle)
Program memory	512 kByte
Data memory	512 kByte
Input data	4 kByte
Output data	4 kByte
Non-volatile memory	16 kByte

Environmental conditions	
Ambient temperature	0…+55 °C
Relative humidity	≤ 5 to 95 % (internal), Level RH-2, no condensation (at 45 °C storage)
Storage temperature	-25…+85 °C
Vibration test	acc. to EN 61131
Shock test	acc. to IEC 68-2-27
Drop and topple	acc. to IEC 68-2-31 and free fall to IEC 68-2-32
Electro-magnetic compatibility	acc. to EN 61131-2

Mechanical data	
Protection class	IP20
Dimensions	50.6 x 114.8 x 74.4 mm

Accessories	
Included in delivery	2 x end brackets BL20-WEW-35/2-SW, 1 x end plate BL20-ABPL

Approval | Certification	ATEX, IECEx, $_{c}$UL$_{us}$, $_{c}$FM$_{us}$, GOST

Bus refreshing module

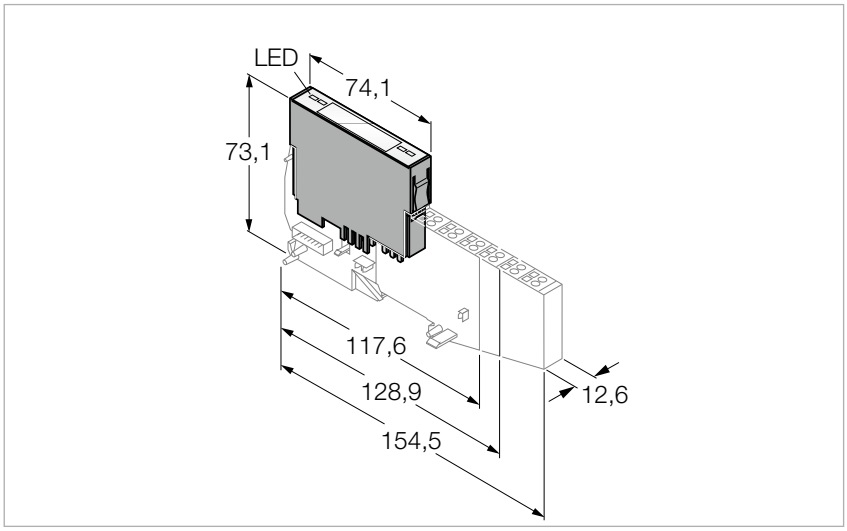

Features

- Fieldbus and connection technology independent
- Protection class IP20
- LEDs indicating system status, field supply and diagnostic information
- Can be used to form potential groups
- BL20 I/O modules powered with 5 VDC nominal voltage via the internal module bus
- Supplies field with 24 VDC nominal voltage

Compatible base modules

Dimension drawing	Type	Pinning assignment
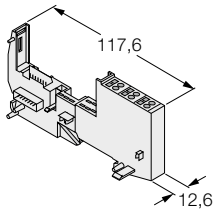	**BL20-P3T-SBB-B** 6827040 Tension spring connection **BL20-P3S-SBB-B** 6827041 Screw connection	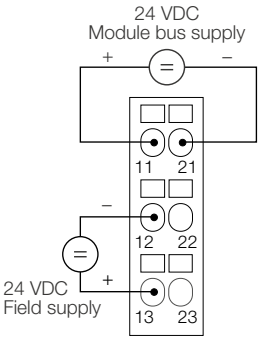
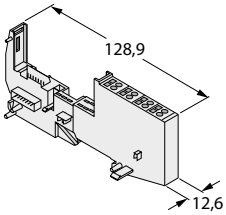	**BL20-P4T-SBBC-B** 6827042 Tension spring connection, C rail **BL20-P4S-SBBC-B** 6827043 Screw connection, C rail	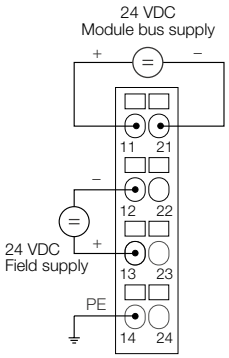

Technical data

Type	BL20-BR-24VDC-D
Ident no.	6827006
Power supply	
Operating voltage range	18…30 VDC
Max. system supply current	1.5 A
Max. field supply current	10 A
Environmental conditions	
Ambient temperature	0…+55 °C
Relative humidity	≤ 5 to 95 % (internal), Level RH-2, no condensation (at 45 °C storage)
Storage temperature	-25…+85 °C
Vibration test	acc. to EN 61131
Shock test	acc. to IEC 68-2-27
Drop and topple	acc. to IEC 68-2-31 and free fall to IEC 68-2-32
Electro-magnetic compatibility	acc. to EN 61131-2
Mechanical data	
Protection class	IP20
Dimensions	12.6 x 74.1 x 55.4 mm
Approval | Certification	ATEX, IECEx, $_{c}UL_{us}$, $_{c}FM_{us}$, GOST

Redundant bus refreshing module

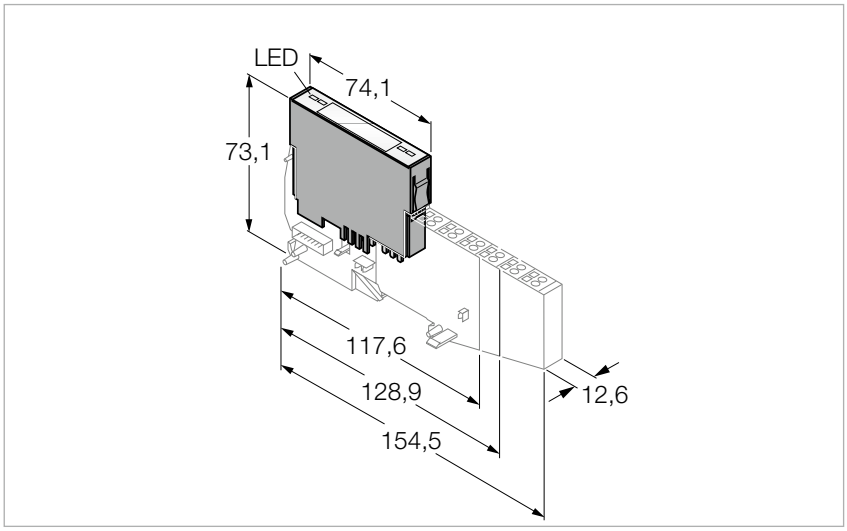

Features

- Fieldbus and connection technology independent
- Protection class IP20
- LEDs indicating system status, field supply and diagnostic information
- Can be used to form potential groups
- Two modules can be connected in series for redundant power supply of a BL20 system
- BL20 I/O modules and gateway powered with 5 VDC via the internal module bus
- Supplies field with 24 VDC nominal voltage

Compatible base modules

Dimension drawing	Type	Pinning assignment
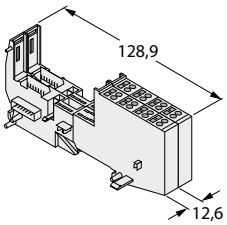 1. potential group	**BL20-P4T-SBBC-G** 6827378 Tension spring connection - slot 1 next to the gateway **BL20-S4T-SBBC** 6827050 Tension spring connection - slot 2 next to the gateway **BL20-P4S-SBBC-G** 6827379 Screw connection - slot 1 next to the gateway **BL20-S4S-SBBC** 6827051 Screw connection - slot 2 next to the gateway	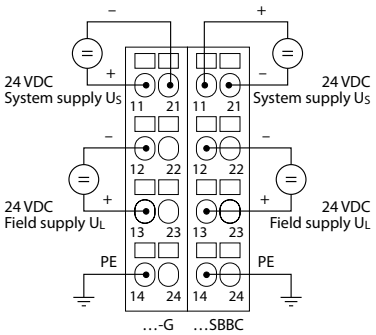
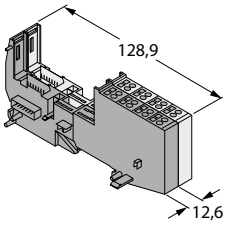 further potential group(s)	**BL20-P4T-SBBC-B** 6827042 Tension spring connection - slot n+1 next to the gateway **BL20-S4T-SBBC** 6827050 Tension spring connection - slot n+2 next to the gateway **BL20-P4S-SBBC-B** 6827043 Screw connection - slot n+1 next to the gateway **BL20-S4S-SBBC** 6827051 Screw connection - slot n+2 next to the gateway	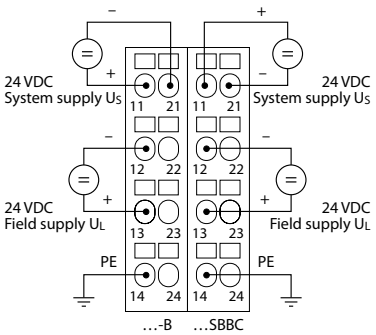

Technical data

Type	BL20-BR-24VDC-RED
Ident no.	6827366
Power supply	
Operating voltage range	18…30 VDC
Max. system supply current	0.7 A
Max. field supply current	5 A
Environmental conditions	
Ambient temperature	0…+55 °C
Relative humidity	≤ 5 to 95 % (internal), Level RH-2, no condensation (at 45 °C storage)
Storage temperature	-25…+85 °C
Vibration test	acc. to EN 61131
Shock test	acc. to IEC 68-2-27
Drop and topple	acc. to IEC 68-2-31 and free fall to IEC 68-2-32
Electro-magnetic compatibility	acc. to EN 61131-2
Mechanical data	
Protection class	IP20
Dimensions	12.6 x 74.1 x 55.4 mm
Approval | Certification	$_{c}UL_{us}$

Power feeding module, 24 VDC

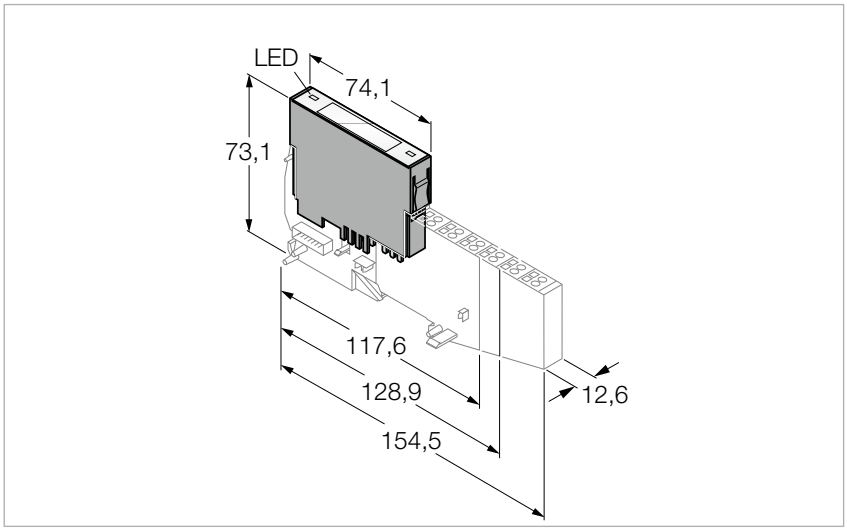

Features

- Fieldbus and connection technology independent
- Protection class IP20
- LEDs indicating system status, field supply and diagnostic information
- Can be used to form potential groups
- Supplies field with 24 VDC nominal voltage

Compatible base modules

Dimension drawing	Type	Pinning assignment
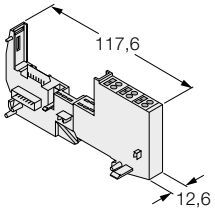	**BL20-P3T-SBB** 6827036 Tension spring connection **BL20-P3S-SBB** 6827037 Screw connection	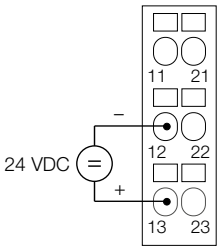
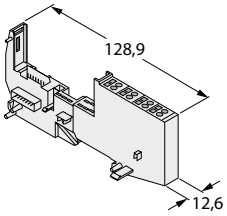	**BL20-P4T-SBBC** 6827038 Tension spring connection, access to C rail **BL20-P4S-SBBC** 6827039 Screw connection, access to C rail	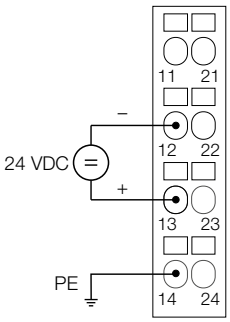

Technical data

Type	BL20-PF-24VDC-D
Ident no.	6827007
Power supply	
Operating voltage range	18…30 VDC
Max. field supply current	10 A
Nominal current from module bus	≤ 28 mA
Environmental conditions	
Ambient temperature	0…+55 °C
Relative humidity	≤ 5 to 95 % (internal), Level RH-2, no condensation (at 45 °C storage)
Storage temperature	-25…+85 °C
Vibration test	acc. to EN 61131
Shock test	acc. to IEC 68-2-27
Drop and topple	acc. to IEC 68-2-31 and free fall to IEC 68-2-32
Electro-magnetic compatibility	acc. to EN 61131-2
Mechanical data	
Protection class	IP20
Dimensions	12.6 x 74.1 x 55.4 mm
Approval | Certification	ATEX, IECEx, $_{c}UL_{us}$, $_{c}FM_{us}$, GOST

Power feeding module, 120/230 VAC

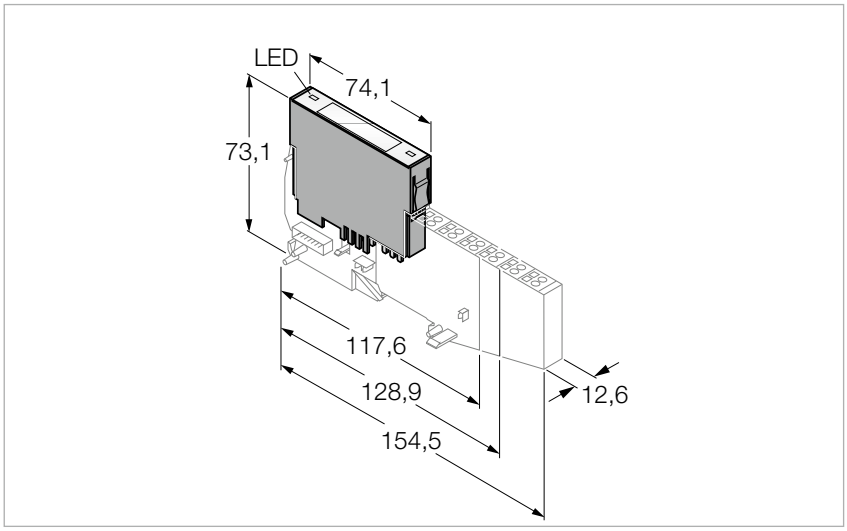

Features

- Fieldbus and connection technology independent
- Protection class IP20
- LEDs indicating system status, field supply and diagnostic information
- Can be used to form potential groups
- Supplies field with 120/230 VAC nominal voltage

Compatible base modules

Dimension drawing	Type	Pinning assignment
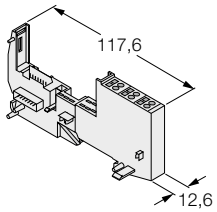	**BL20-P3T-SBB** 6827036 Tension spring connection **BL20-P3S-SBB** 6827037 Screw connection	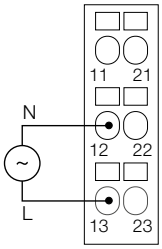
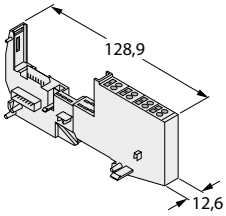	**BL20-P4T-SBBC** 6827038 Tension spring connection, access to C rail **BL20-P4S-SBBC** 6827039 Screw connection, access to C rail	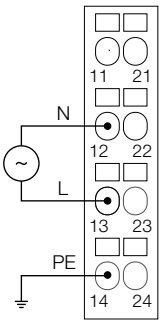

Technical data

Type	BL20-PF-120/230VAC-D
Ident no.	6827008
Power supply	
Operating voltage range	102…253 VAC
Frequency	50…60 Hz
Max. field supply current	10 A
Nominal current from module bus	≤ 25 mA
Environmental conditions	
Ambient temperature	0…+55 °C
Relative humidity	≤ 5 to 95 % (internal), Level RH-2, no condensation (at 45 °C storage)
Storage temperature	-25…+85 °C
Vibration test	acc. to EN 61131
Shock test	acc. to IEC 68-2-27
Drop and topple	acc. to IEC 68-2-31 and free fall to IEC 68-2-32
Electro-magnetic compatibility	acc. to EN 61131-2
Mechanical data	
Protection class	IP20
Dimensions	12.6 x 74.1 x 55.4 mm
Approval | Certification	$_{c}UL_{us}$

Input module, digital, 120/230 VAC, 2-channel

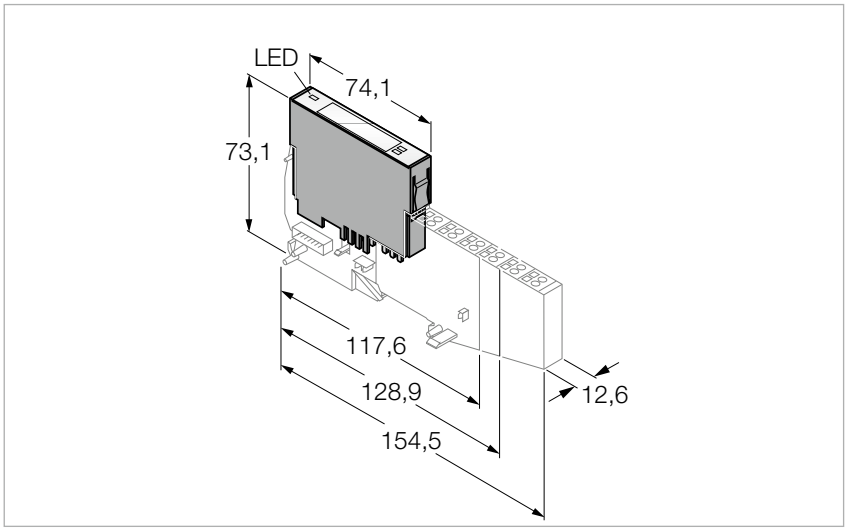

Features

- Fieldbus and connection technology independent
- Protection class IP20
- LEDs indicate status and diagnostic
- Electronics galvanically separated from the field level via optocouplers
- 2 digital inputs, 120/230 VAC

Compatible base modules

Dimension drawing	Type	Pinning assignment
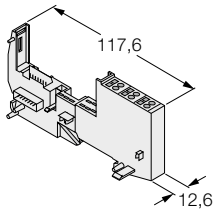	**BL20-S3T-SBB** 6827044 Tension spring connection **BL20-S3S-SBB** 6827045 Screw connection	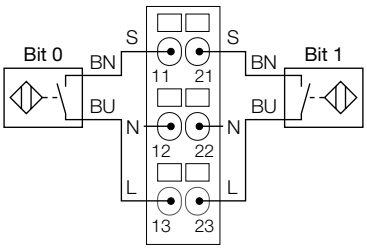
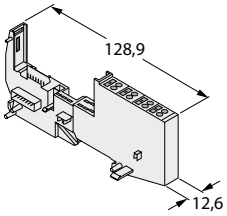	**BL20-S4T-SBBC** 6827050 Tension spring connection, access to C rail **BL20-S4S-SBBC** 6827051 Screw connection, access to C rail	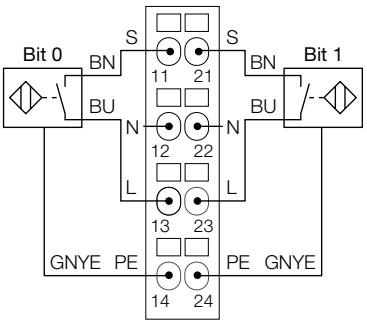

Technical data

Type	BL20-2DI-120/230VAC-P
Ident no.	6827011
Power supply	
Number of channels	2
Nominal current from module bus	≤ 28 mA
Nominal current from field supply	≤ 20 mA
Power loss, typical	≤ 1 W
Inputs	
Low level signal voltage	0…20 VAC
High level signal voltage	79…265 VAC
Frequency range	47.5…63 Hz
Low level signal current	0…1 mA
High level signal current	3…10 mA
Input delay	< 20 ms
Electrical isolation	electronics to the field level
Environmental conditions	
Ambient temperature	0…+55 °C
Relative humidity	≤ 5 to 95 % (internal), Level RH-2, no condensation (at 45 °C storage)
Storage temperature	-25…+85 °C
Vibration test	acc. to EN 61131
Shock test	acc. to IEC 68-2-27
Drop and topple	acc. to IEC 68-2-31 and free fall to IEC 68-2-32
Electro-magnetic compatibility	acc. to EN 61131-2
Mechanical data	
Protection class	IP20
Dimensions	12.6 x 74.1 x 55.4 mm
Approval | Certification	$_{c}UL_{us}$

Input module, digital, 24 VDC, PNP, 4-channel

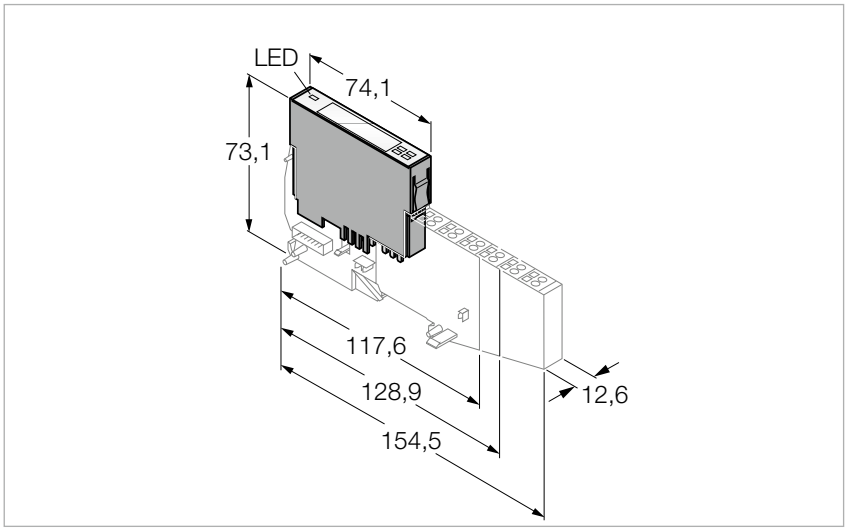

Features

- Fieldbus and connection technology independent
- Protection class IP20
- LEDs indicate status and diagnostic
- Electronics galvanically separated from the field level via optocouplers
- 4 digital inputs, 24 VDC, PNP switching

Compatible base modules

Dimension drawing	Type	Pinning assignment
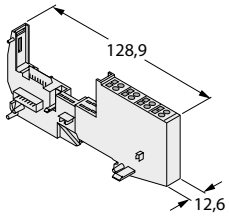	**BL20-S4T-SBBS** 6827046 Tension spring connection **BL20-S4S-SBBS** 6827047 Screw connection	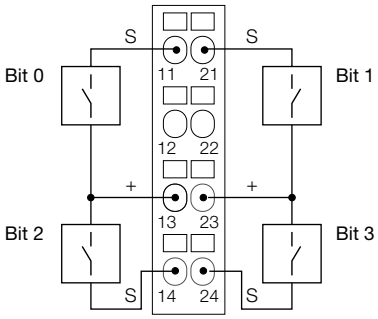
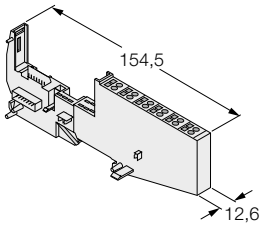	**BL20-S6T-SBBSBB** 6827052 Tension spring connection **BL20-S6S-SBBSBB** 6827053 Screw connection	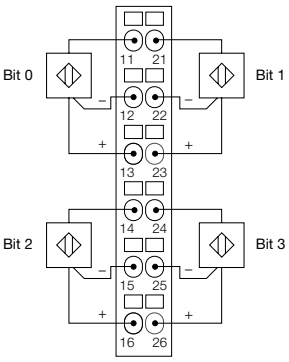

Technical data

Type	BL20-4DI-24VDC-P
Ident no.	6827012
Power supply	
Number of channels	4
Nominal current from module bus	≤ 28 mA
Nominal current from field supply	≤ 40 mA
Power loss, typical	≤ 1 W
Inputs	
Input type	pnp
Low level signal voltage	-30…+5 V
High level signal voltage	15…30 V
Low level signal current	0…1.5 mA
High level signal current	2…10 mA
Input delay	< 0.2 ms
Electrical isolation	electronics to the field level
Environmental conditions	
Ambient temperature	0…+55 °C
Relative humidity	≤ 5 to 95 % (internal), Level RH-2, no condensation (at 45 °C storage)
Storage temperature	-25…+85 °C
Vibration test	acc. to EN 61131
Shock test	acc. to IEC 68-2-27
Drop and topple	acc. to IEC 68-2-31 and free fall to IEC 68-2-32
Electro-magnetic compatibility	acc. to EN 61131-2
Mechanical data	
Protection class	IP20
Dimensions	12.6 x 74.1 x 55.4 mm
Approval | Certification	ATEX, IECEx, $_{c}$UL$_{us}$, $_{c}$FM$_{us}$, GOST

Input module, digital, 24 VDC, NPN, 4-channel

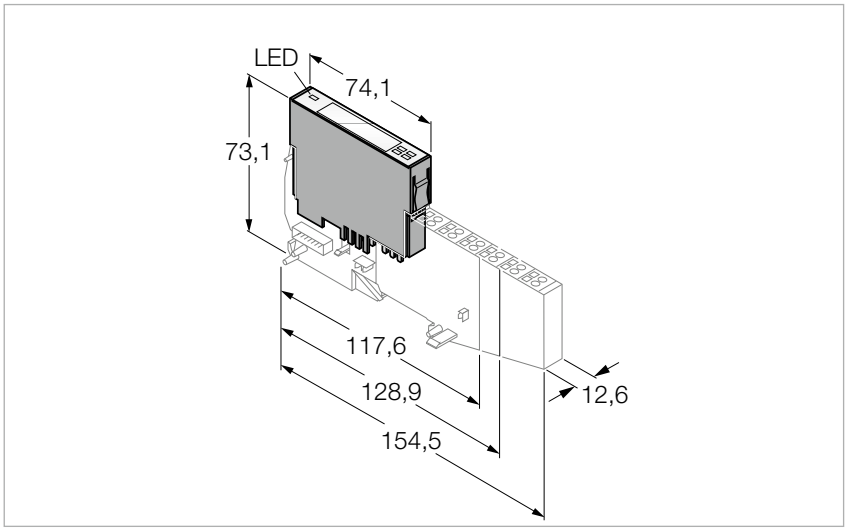

Features

- Fieldbus and connection technology independent
- Protection class IP20
- LEDs indicate status and diagnostic
- Electronics galvanically separated from the field level via optocouplers
- 4 digital inputs, 24 VDC, NPN switching

Compatible base modules

Dimension drawing	Type	Pinning assignment
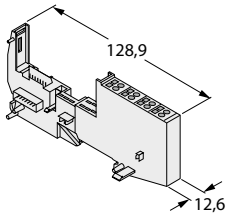	**BL20-S4T-SBBS** 6827046 Tension spring connection **BL20-S4S-SBBS** 6827047 Screw connection	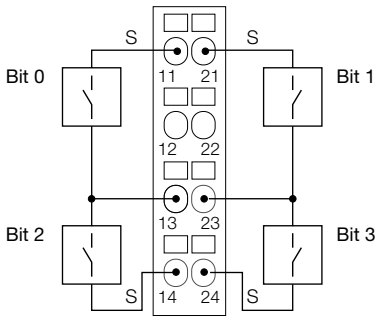
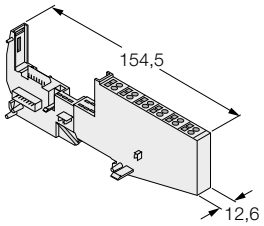	**BL20-S6T-SBBSBB** 6827052 Tension spring connection **BL20-S6S-SBBSBB** 6827053 Screw connection	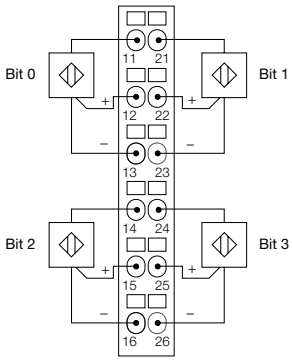

Technical data

Type	BL20-4DI-24VDC-N
Ident no.	6827013
Power supply	
Number of channels	4
Nominal current from module bus	≤ 28 mA
Nominal current from field supply	≤ 40 mA
Power loss, typical	≤ 1 W
Inputs	
Input type	npn
Low level signal voltage	> 13 V
High level signal voltage	0…5 V
Low level signal current	0…1.2 mA
High level signal current	1.3…6 mA
Input delay	< 0.2 ms
Electrical isolation	electronics to the field level
Environmental conditions	
Ambient temperature	0…+55 °C
Relative humidity	≤ 5 to 95 % (internal), Level RH-2, no condensation (at 45 °C storage)
Storage temperature	-25…+85 °C
Vibration test	acc. to EN 61131
Shock test	acc. to IEC 68-2-27
Drop and topple	acc. to IEC 68-2-31 and free fall to IEC 68-2-32
Electro-magnetic compatibility	acc. to EN 61131-2
Mechanical data	
Protection class	IP20
Dimensions	12.6 x 74.1 x 55.4 mm
Approval | Certification	ATEX, IECEx, $_{c}$UL$_{us}$, $_{c}$FM$_{us}$, GOST

Input module, digital, NAMUR, 4-channel

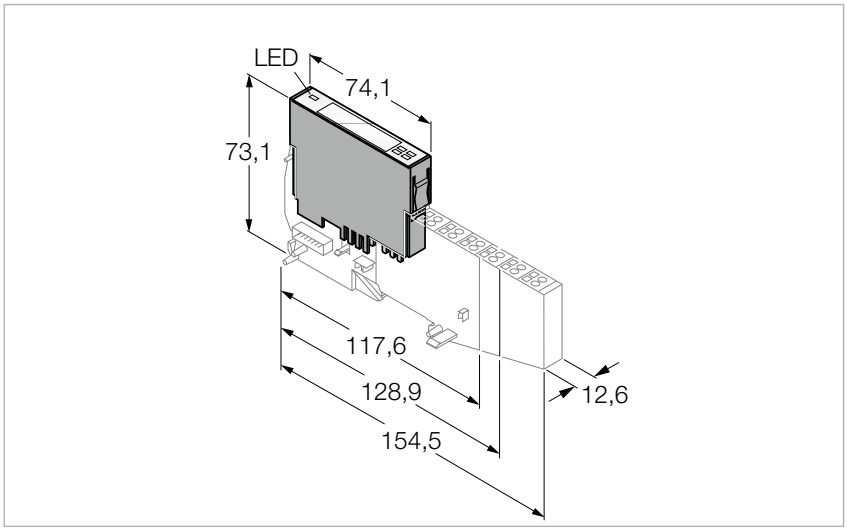

Features

- Fieldbus and connection technology independent
- Protection class IP20
- LEDs indicate status and diagnostic
- Electronics galvanically separated from the field level via optocouplers
- NAMUR inputs acc. to DIN EN 60947-5-6

Compatible base modules

Dimension drawing	Type	Pinning assignment
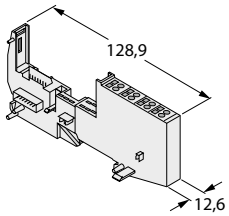	**BL20-S4T-SBBS** 6827046 Tension spring connection **BL20-S4S-SBBS** 6827047 Screw connection	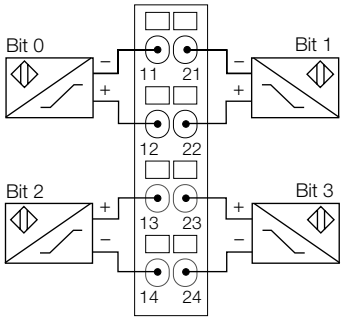

Technical data

Type	BL20-4DI-NAMUR
Ident no.	6827212
Power supply	
Number of channels	4
Nominal current from module bus	≤ 40 mA
Nominal current from field supply	≤ 30 mA
Power loss, typical	≤ 1 W
Inputs	
Input wire-break	Switch on threshold: 0.08 mA Switch off threshold: 0.12 mA
Input - short-circuit	Switch on threshold: 6.2 mA Switch off threshold: 5.9 mA
Input type	NAMUR acc. to DIN EN 60947-5-6
No-load voltage	8.2…8.6 VDC
Input - status	Switch on threshold: 1.74 mA Switch off threshold: 1.45 mA
Input delay	0.25 or 2.5 ms
Electrical isolation	electronics to the field level
Environmental conditions	
Ambient temperature	0…+55 °C
Relative humidity	≤ 5 to 95 % (internal), Level RH-2, no condensation (at 45 °C storage)
Storage temperature	-25…+85 °C
Vibration test	acc. to EN 61131
Shock test	acc. to IEC 68-2-27
Drop and topple	acc. to IEC 68-2-31 and free fall to IEC 68-2-32
Electro-magnetic compatibility	acc. to EN 61131-2
Mechanical data	
Protection class	IP20
Dimensions	12.6 x 74.1 x 55.4 mm
Approval | Certification	ATEX, IECEx, $_{c}$UL$_{us}$, $_{c}$FM$_{us}$, GOST

Input module, digital, 24 VDC, PNP, 8-channel

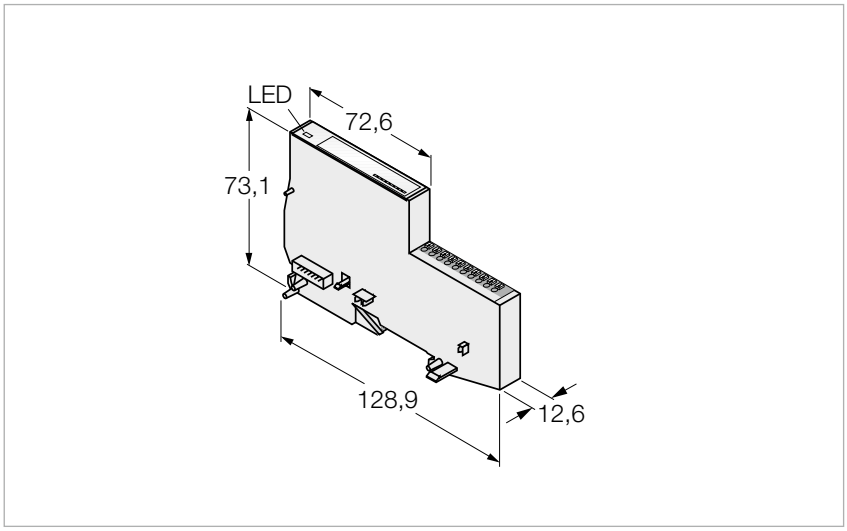

Features

- Fieldbus-independent
- Electronics and connection technology in one housing
- Connectivity: Push-in terminals
- Protection class IP20
- 8 digital inputs, 24 VDC, PNP switching

Pinning overview

Position	Note	Pinning assignment
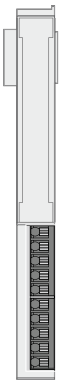	**Digital inputs**	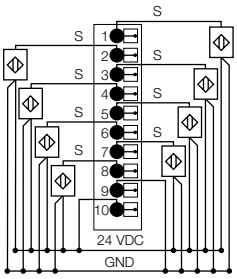

Hans Turck GmbH & Co. KG ▪ Tel. +49 208 49 52-0 ▪ Fax +49 208 49 52-264

Technical data

Type	BL20-E-8DI-24VDC-P
Ident no.	6827227
Power supply	
Number of channels	8
Nominal current from module bus	≤ 15 mA
Nominal current from field supply	≤ 2 mA
Power loss, typical	≤ 1.5 W
Inputs	
Input type	pnp
Low level signal voltage	-30…+5 V
High level signal voltage	11…30 V
Low level signal current	-1…+1.5 mA
High level signal current	2…5 mA
Input delay	< 0.2 ms
Electrical isolation	electronics to the field level
Environmental conditions	
Ambient temperature	0…+55 °C
Relative humidity	≤ 5 to 95 % (internal), Level RH-2, no condensation (at 45 °C storage)
Storage temperature	-25…+85 °C
Vibration test	acc. to EN 61131
Shock test	acc. to IEC 68-2-27
Drop and topple	acc. to IEC 68-2-31 and free fall to IEC 68-2-32
Electro-magnetic compatibility	acc. to EN 61131-2
Mechanical data	
Protection class	IP20
Dimensions	12.6 x 128.6 x 74.6 mm
Approval | Certification	ATEX, IECEx, $_{c}$UL$_{us}$, $_{c}$FM$_{us}$, GOST

Input module, digital, 24 VDC, PNP, 16-channel

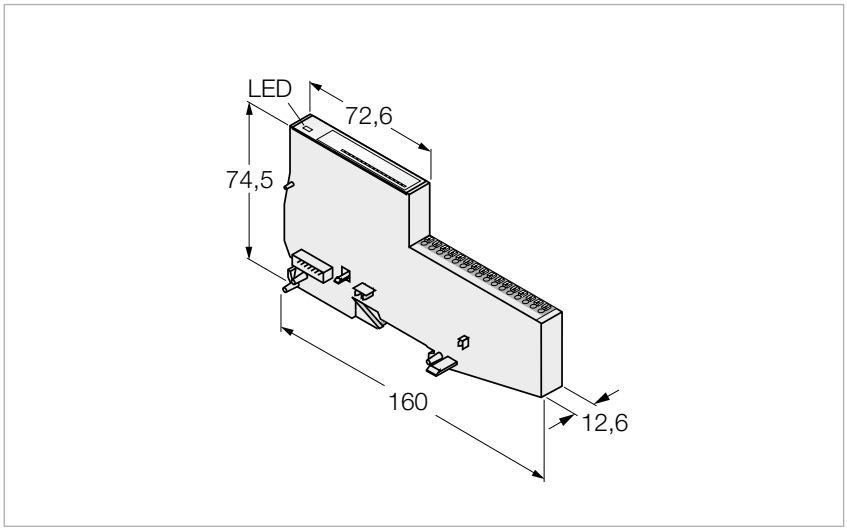

Features

- Fieldbus-independent
- Electronics and connection technology in one housing
- Connectivity: Push-in terminals
- Protection class IP20
- 16 digital inputs, 24 VDC, PNP switching

Pinning overview

Position	Note	Pinning assignment
	**Digital inputs**	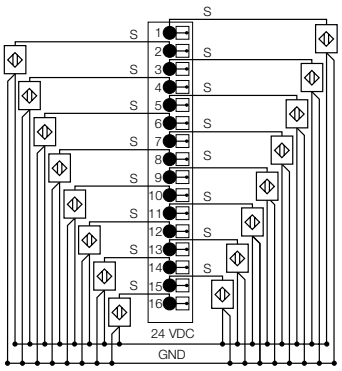

Hans Turck GmbH & Co. KG ▪ Tel. +49 208 49 52-0 ▪ Fax +49 208 49 52-264

Technical data

Type	BL20-E-16DI-24VDC-P
Ident no.	6827231
Power supply	
Number of channels	16
Nominal current from module bus	≤ 15 mA
Nominal current from field supply	≤ 3 mA
Power loss, typical	≤ 1.5 W
Inputs	
Input type	pnp
Low level signal voltage	-30…+5 V
High level signal voltage	11…30 V
Low level signal current	-1…+1.5 mA
High level signal current	2…5 mA
Input delay	< 0.3 ms
Electrical isolation	electronics to the field level
Environmental conditions	
Ambient temperature	0…+55 °C
Relative humidity	≤ 5 to 95 % (internal), Level RH-2, no condensation (at 45 °C storage)
Storage temperature	-25…+85 °C
Vibration test	acc. to EN 61131
Shock test	acc. to IEC 68-2-27
Drop and topple	acc. to IEC 68-2-31 and free fall to IEC 68-2-32
Electro-magnetic compatibility	acc. to EN 61131-2
Mechanical data	
Protection class	IP20
Dimensions	12.6 x 160 x 74.6 mm
Approval | Certification	ATEX, IECEx, $_{c}$UL$_{us}$, $_{c}$FM$_{us}$, GOST

Input module, digital, 24 VDC, PNP, 16-channel

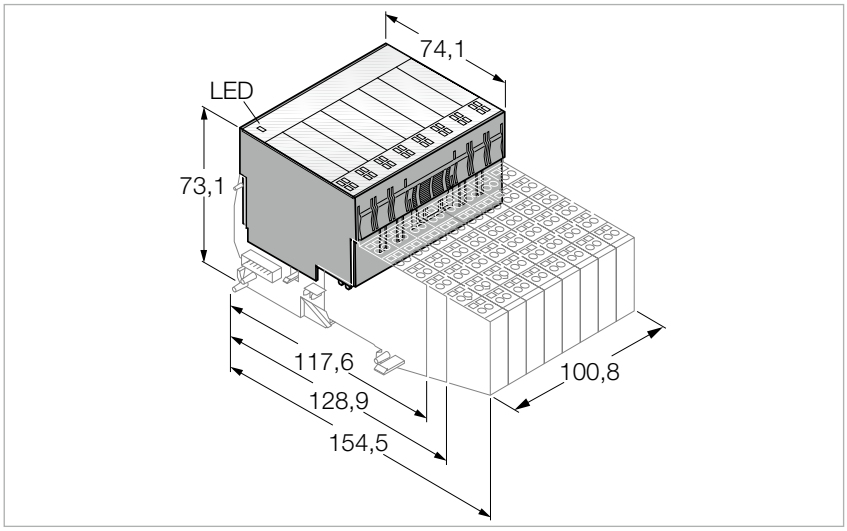

Features

- Fieldbus and connection technology independent
- Protection class IP20
- LEDs indicate status and diagnostic
- Electronics galvanically separated from the field level via optocouplers
- 16 digital inputs, 24 VDC, PNP switching

Compatible base modules

Dimension drawing	Type	Pinning assignment
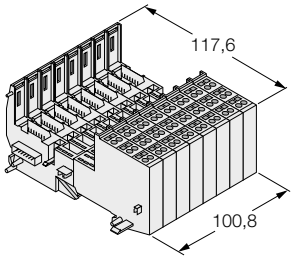	**BL20-B3T-SBB** 6827054 Tension spring connection **BL20-B3S-SBB** 6827055 Screw connection	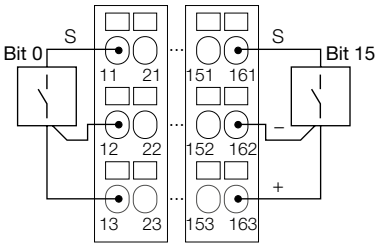
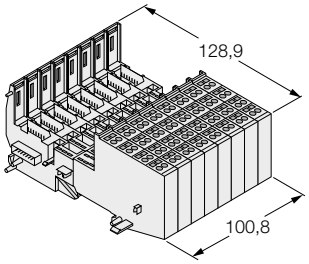	**BL20-B4T-SBBC** 6827056 Tension spring connection, access to C rail **BL20-B4S-SBBC** 6827057 Screw connection, access to C rail	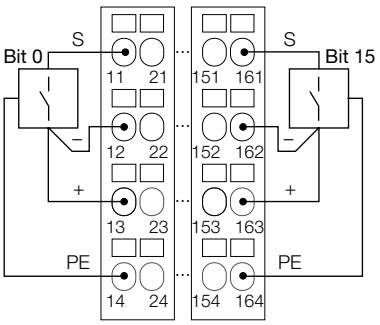

Hans Turck GmbH & Co. KG ▪ Tel. +49 208 49 52-0 ▪ Fax +49 208 49 52-264

Technical data

Type	BL20-16DI-24VDC-P
Ident no.	6827014
Power supply	
Number of channels	16
Nominal current from module bus	≤ 45 mA
Nominal current from field supply	≤ 40 mA
Power loss, typical	≤ 2.5 W
Inputs	
Input type	pnp
Low level signal voltage	-30…+5 V
High level signal voltage	15…30 V
Low level signal current	0…1.5 mA
High level signal current	2…10 mA
Input delay	< 0.2 ms
Electrical isolation	electronics to the field level
Environmental conditions	
Ambient temperature	0…+55 °C
Relative humidity	≤ 5 to 95 % (internal), Level RH-2, no condensation (at 45 °C storage)
Storage temperature	-25…+85 °C
Vibration test	acc. to EN 61131
Shock test	acc. to IEC 68-2-27
Drop and topple	acc. to IEC 68-2-31 and free fall to IEC 68-2-32
Electro-magnetic compatibility	acc. to EN 61131-2
Mechanical data	
Protection class	IP20
Dimensions	100.8 x 74.1 x 55.4 mm
Approval | Certification	ATEX, IECEx, $_{c}$UL$_{us}$, $_{c}$FM$_{us}$, GOST

Input module, digital, 24 VDC, PNP, 32-channel

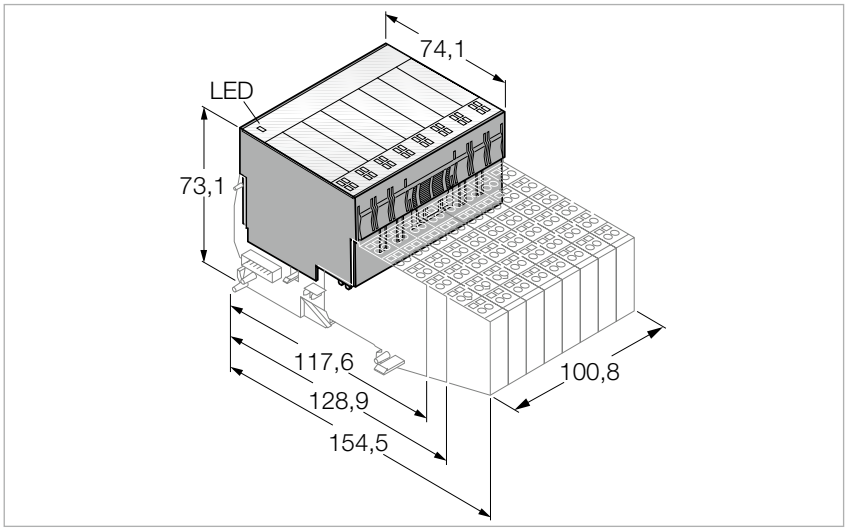

Features

- Fieldbus and connection technology independent
- Protection class IP20
- LEDs indicate status and diagnostic
- Electronics galvanically separated from the field level via optocouplers
- 32 digital inputs, 24 VDC, PNP switching

Compatible base modules

Dimension drawing	Type	Pinning assignment
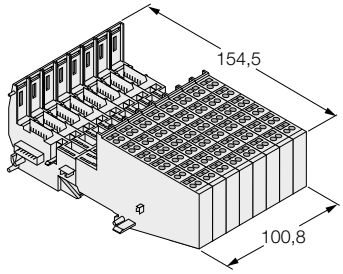	**BL20-B6T-SBBSBB** 6827065 Tension spring connection **BL20-B6S-SBBSBB** 6827067 Screw connection	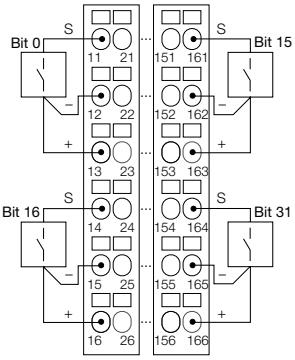

Technical data

Type	BL20-32DI-24VDC-P
Ident no.	6827015
Power supply	
Number of channels	32
Nominal current from module bus	≤ 45 mA
Nominal current from field supply	≤ 30 mA
Power loss, typical	≤ 4.2 W
Inputs	
Input type	pnp
Low level signal voltage	-30…+5 V
High level signal voltage	15…30 V
Low level signal current	< 1.5 mA
High level signal current	2…10 mA
Input delay	< 0.2 ms
Electrical isolation	electronics to the field level
Environmental conditions	
Ambient temperature	0…+55 °C
Relative humidity	≤ 5 to 95 % (internal), Level RH-2, no condensation (at 45 °C storage)
Storage temperature	-25…+85 °C
Vibration test	acc. to EN 61131
Shock test	acc. to IEC 68-2-27
Drop and topple	acc. to IEC 68-2-31 and free fall to IEC 68-2-32
Electro-magnetic compatibility	acc. to EN 61131-2
Mechanical data	
Protection class	IP20
Dimensions	100.8 x 74.1 x 55.4 mm
Approval | Certification	ATEX, IECEx, $_{c}$UL$_{us}$, $_{c}$FM$_{us}$, GOST

Output module, digital, 24 VDC, 0.5 A, NPN, 2-channel

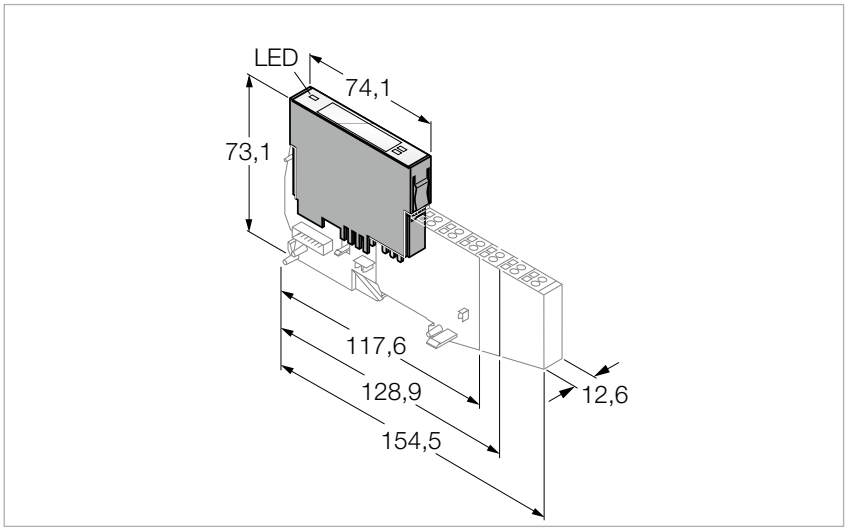

Features

- Fieldbus and connection technology independent
- Protection class IP20
- LEDs indicate status and diagnostic
- Electronics galvanically separated from the field level via optocouplers
- 2 digital outputs, 24 VDC, max. 0.5 A, NPN switching

Compatible base modules

Dimension drawing	Type	Pinning assignment
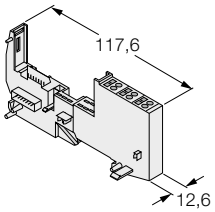	**BL20-S3T-SBC** 6827058 Tension spring connection, access to C rail **BL20-S3S-SBC** 6827059 Screw connection, access to C rail	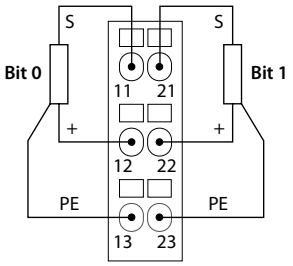
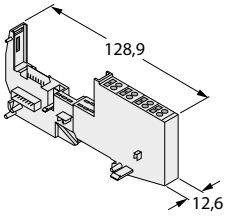	**BL20-S4T-SBCS** 6827063 Tension spring connection, access to C rail **BL20-S4S-SBCS** 6827060 Screw connection, access to C rail	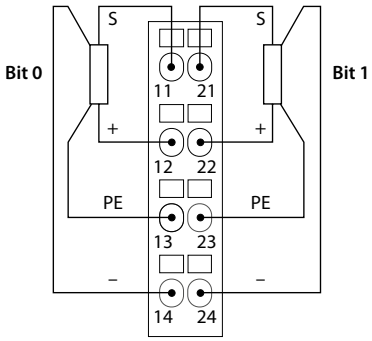

Technical data

Type	BL20-2DO-24VDC-0.5A-N
Ident no.	6827025
Power supply	
Number of channels	2
Nominal current from module bus	≤ 32 mA
Nominal current from field supply	≤ 20 mA
Power loss, typical	≤ 1 W
Outputs	
Output voltage	24 VDC
Output current per channel	0.5 A
Output type	npn
Load type	resistive, inductive, lamp load
Load resistance, resistive	> 48 Ω
Load resistance, inductive	< 1.2 H
Lamp load	< 12 W
Switching frequency, resistive	< 100 Hz
Inductive switching frequency	< 2 Hz
Switching frequency, lamp load	< 10 Hz
Output delay	0.1 ms
Short-circuit protection	yes
Simultaneity factor	1
Electrical isolation	electronics to the field level
Environmental conditions	
Ambient temperature	0…+55 °C
Relative humidity	≤ 5 to 95 % (internal), Level RH-2, no condensation (at 45 °C storage)
Storage temperature	-25…+85 °C
Vibration test	acc. to EN 61131
Shock test	acc. to IEC 68-2-27
Drop and topple	acc. to IEC 68-2-31 and free fall to IEC 68-2-32
Electro-magnetic compatibility	acc. to EN 61131-2
Mechanical data	
Protection class	IP20
Dimensions	12.6 x 74.1 x 55.4 mm
Approval | Certification	ATEX, IECEx, $_{c}$UL$_{us}$, $_{c}$FM$_{us}$, GOST

Output module, digital, 24 VDC, 2.0 A, PNP, 2-channel

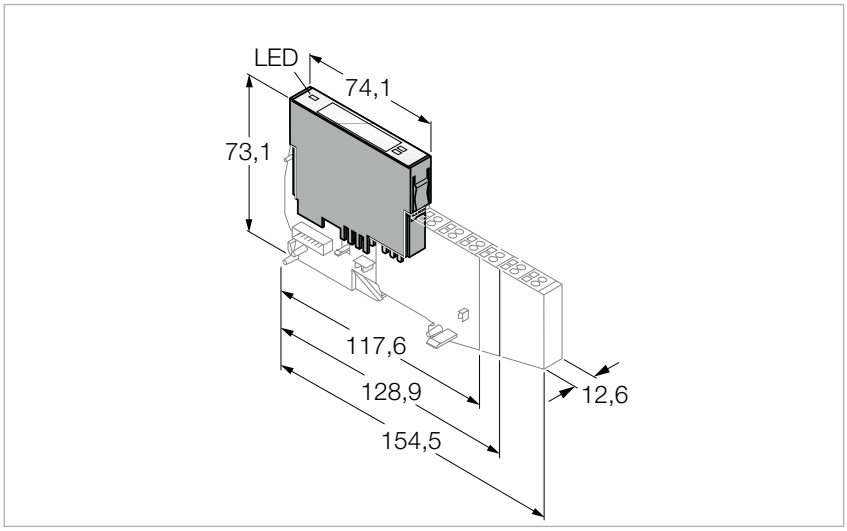

Features

- Fieldbus and connection technology independent
- Protection class IP20
- LEDs indicate status and diagnostic
- Electronics galvanically separated from the field level via optocouplers
- 2 digital outputs, 24 VDC, max. 2 A, PNP switching

Compatible base modules

Dimension drawing	Type	Pinning assignment
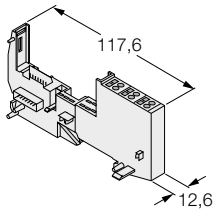	**BL20-S3T-SBC** 6827058 Tension spring connection, access to C rail **BL20-S3S-SBC** 6827059 Screw connection, access to C rail	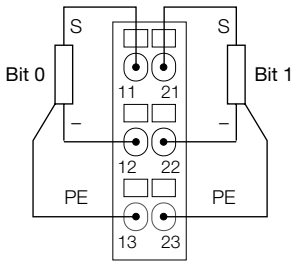
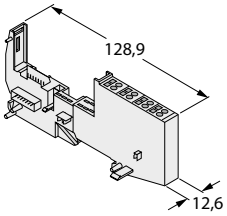	**BL20-S4T-SBCS** 6827063 Tension spring connection, access to C rail **BL20-S4S-SBCS** 6827060 Screw connection, access to C rail	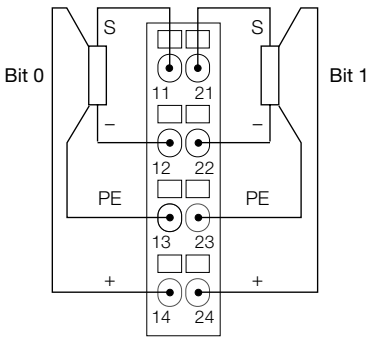

Hans Turck GmbH & Co. KG ▪ Tel. +49 208 49 52-0 ▪ Fax +49 208 49 52-264

Technical data

Type	BL20-2DO-24VDC-2A-P
Ident no.	6827026
Power supply	
Number of channels	2
Nominal current from module bus	≤ 33 mA
Nominal current from field supply	≤ 50 mA
Power loss, typical	≤ 1 W
Outputs	
Output voltage	24 VDC
Output current per channel	2 A
Output type	pnp
Load type	resistive, inductive, lamp load
Load resistance, resistive	> 12 Ω
Load resistance, inductive	< 1.2 H
Lamp load	< 6 W
Switching frequency, resistive	< 5000 Hz
Switching frequency, lamp load	< 10 Hz
Output delay	0.1 ms
Short-circuit protection	yes
Simultaneity factor	1
Electrical isolation	electronics to the field level
Environmental conditions	
Ambient temperature	0…+55 °C
Relative humidity	≤ 5 to 95 % (internal), Level RH-2, no condensation (at 45 °C storage)
Storage temperature	-25…+85 °C
Vibration test	acc. to EN 61131
Shock test	acc. to IEC 68-2-27
Drop and topple	acc. to IEC 68-2-31 and free fall to IEC 68-2-32
Electro-magnetic compatibility	acc. to EN 61131-2
Mechanical data	
Protection class	IP20
Dimensions	12.6 x 74.1 x 55.4 mm
Approval | Certification	ATEX, IECEx, $_{c}$UL$_{us}$, $_{c}$FM$_{us}$, GOST

Output module, digital, 120/230 VAC, 0.5 A, 2-channel

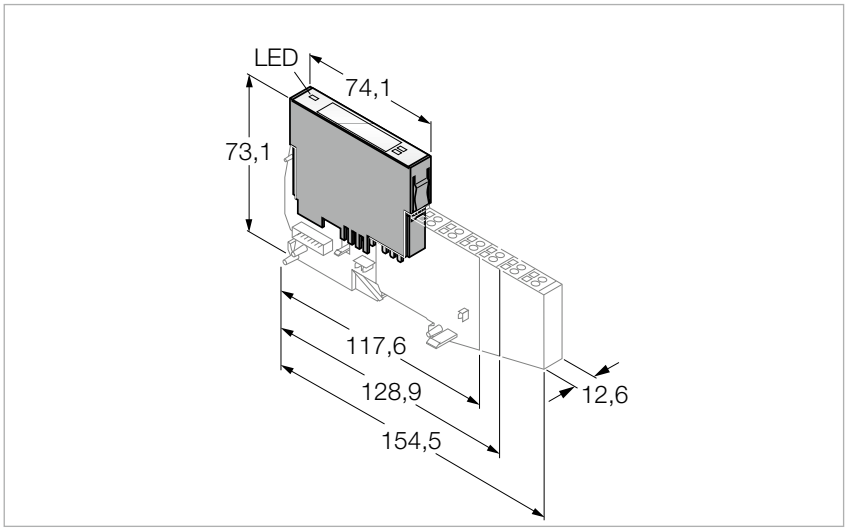

Features

- Fieldbus and connection technology independent
- Protection class IP20
- LEDs indicate status and diagnostic
- Electronics galvanically separated from the field level via optocouplers
- 2 digital outputs, 120/230 VAC, max. 0.5 A

Compatible base modules

Dimension drawing	Type	Pinning assignment
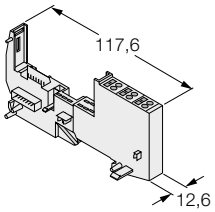	**BL20-S3T-SBC** 6827058 Tension spring connection, access to C rail **BL20-S3S-SBC** 6827059 Screw connection, access to C rail	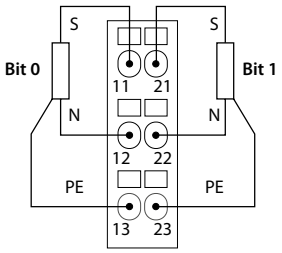
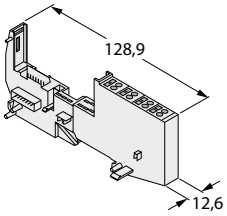	**BL20-S4T-SBCS** 6827063 Tension spring connection, access to C rail **BL20-S4S-SBCS** 6827060 Screw connection, access to C rail	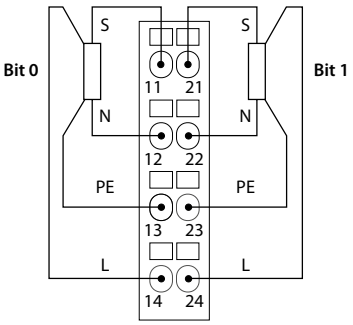

Technical data

Type	BL20-2DO-120/230VAC-0.5A
Ident no.	6827137
Power supply	
Number of channels	2
Nominal current from module bus	≤ 35 mA
Nominal current from field supply	≤ 20 mA
Power loss, typical	≤ 1 W
Outputs	
Output voltage	120 / 230 VAC
Output current per channel	0.5 A
Load type	resistive, inductive, lamp load
Load resistance, resistive	> 48 Ω
Load resistance, inductive	< 1.2 H
Output delay	0.1 ms
Short-circuit protection	yes
Simultaneity factor	1
Electrical isolation	electronics to the field level
Environmental conditions	
Ambient temperature	0…+55 °C
Relative humidity	≤ 5 to 95 % (internal), Level RH-2, no condensation (at 45 °C storage)
Storage temperature	-25…+85 °C
Vibration test	acc. to EN 61131
Shock test	acc. to IEC 68-2-27
Drop and topple	acc. to IEC 68-2-31 and free fall to IEC 68-2-32
Electro-magnetic compatibility	acc. to EN 61131-2
Mechanical data	
Protection class	IP20
Dimensions	12.6 x 74.1 x 55.4 mm
Approval | Certification	$_{c}UL_{us}$

Output module, relay, changeover, 2-channel

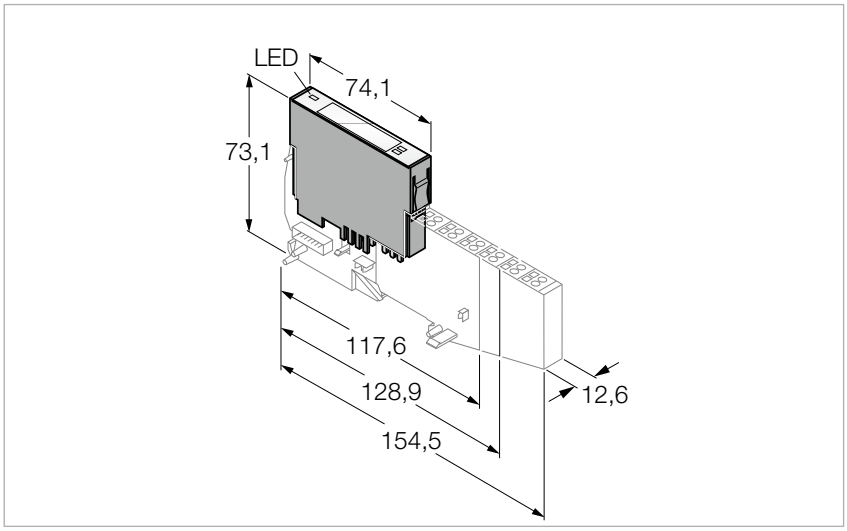

Features

- Fieldbus and connection technology independent
- Protection class IP20
- LEDs indicate status and diagnostic
- Electronics galvanically separated from the field level via optocouplers
- 2 channels as changeover contacts

Compatible base modules

Dimension drawing	Type	Pinning assignment
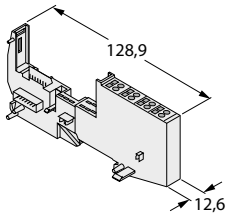	**BL20-S4T-SBBS** 6827046 Tension spring connection **BL20-S4S-SBBS** 6827047 Screw connection	Wiring diagram 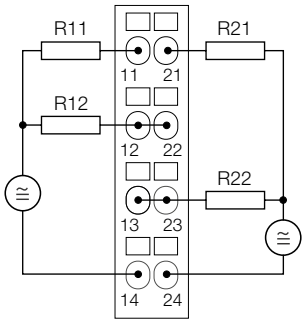 Module wiring diagram 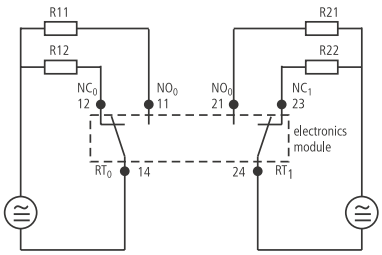

Load limit curve

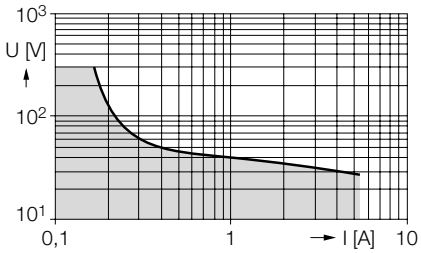

Technical data

Type	BL20-2DO-R-CO
Ident no.	6827030

Power supply	
Number of channels	2 changeover contacts, galvanically isolated
Nominal current from module bus	≤ 28 mA
Nominal current from field supply	≤ 20 mA
Power loss, typical	≤ 1 W

Outputs	
Load type	resistive, inductive, lamp load
Rated load voltage	230/30 VAC/DC
Simultaneity factor	1
Lifespan at 230 VAC, 5A	100000 switching cycles
Lifespan at 230 VAC, 0.5A	1000000 switching cycles
Output current with DC voltage (resistive)	see load limit curve
Electrical isolation	electronics to the field level

Environmental conditions	
Ambient temperature	0…+55 °C
Relative humidity	≤ 5 to 95 % (internal), Level RH-2, no condensation (at 45 °C storage)
Storage temperature	-25…+85 °C
Vibration test	acc. to EN 61131
Shock test	acc. to IEC 68-2-27
Drop and topple	acc. to IEC 68-2-31 and free fall to IEC 68-2-32
Electro-magnetic compatibility	acc. to EN 61131-2

Mechanical data	
Protection class	IP20
Dimensions	12.6 x 74.1 x 55.4 mm

Approval | Certification	ATEX, IECEx, $_{c}UL_{us}$, $_{c}FM_{us}$, GOST

Output module, digital, 24 VDC, 0.5 A, PNP, 4-channel

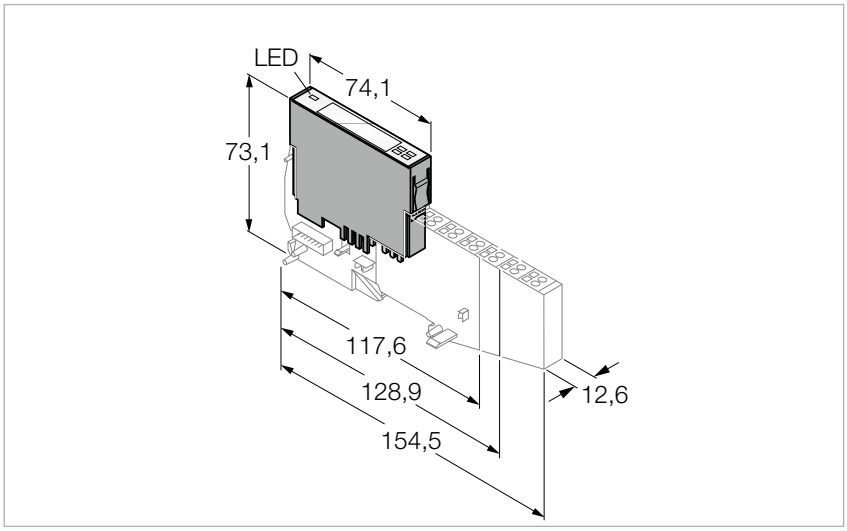

Features

- Fieldbus and connection technology independent
- Protection class IP20
- LEDs indicate status and diagnostic
- Electronics galvanically separated from the field level via optocouplers
- 4 digital outputs, 24 VDC, max. 0.5 A, PNP switching

Compatible base modules

Dimension drawing	Type	Pinning assignment
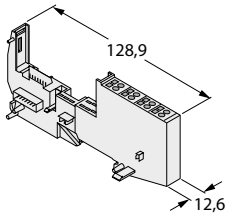	**BL20-S4T-SBCS** 6827063 Tension spring connection, access to C rail **BL20-S4S-SBCS** 6827060 Screw connection, access to C rail	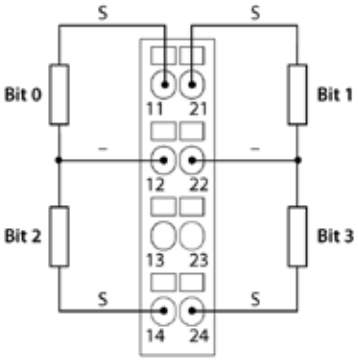
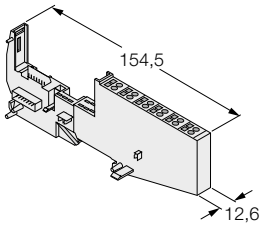	**BL20-S6T-SBCSBC** 6827064 Tension spring connection, access to C rail **BL20-S6S-SBCSBC** 6827066 Screw connection, access to C rail	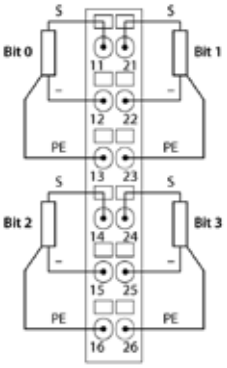

Technical data

Type	BL20-4DO-24VDC-0.5A-P
Ident no.	6827023
Power supply	
Number of channels	4
Nominal current from module bus	≤ 30 mA
Nominal current from field supply	≤ 25 mA
Power loss, typical	≤ 1 W
Outputs	
Output voltage	24 VDC
Output current per channel	0.5 A
Output type	pnp
Load type	resistive, inductive, lamp load
Load resistance, resistive	> 48 Ω
Load resistance, inductive	< 1.2 H
Lamp load	< 6 W
Switching frequency, resistive	< 5000 Hz
Inductive switching frequency	< 2 Hz
Switching frequency, lamp load	< 10 Hz
Output delay	0.25 ms
Short-circuit protection	yes
Simultaneity factor	1
Electrical isolation	electronics to the field level
Environmental conditions	
Ambient temperature	0…+55 °C
Relative humidity	≤ 5 to 95 % (internal), Level RH-2, no condensation (at 45 °C storage)
Storage temperature	-25…+85 °C
Vibration test	acc. to EN 61131
Shock test	acc. to IEC 68-2-27
Drop and topple	acc. to IEC 68-2-31 and free fall to IEC 68-2-32
Electro-magnetic compatibility	acc. to EN 61131-2
Mechanical data	
Protection class	IP20
Dimensions	12.6 x 74.1 x 55.4 mm
Approval | Certification	ATEX, IECEx, $_{c}$UL$_{us}$, $_{c}$FM$_{us}$, GOST

Output module, digital, 24 VDC, 0.5 A, PNP, 8-channel

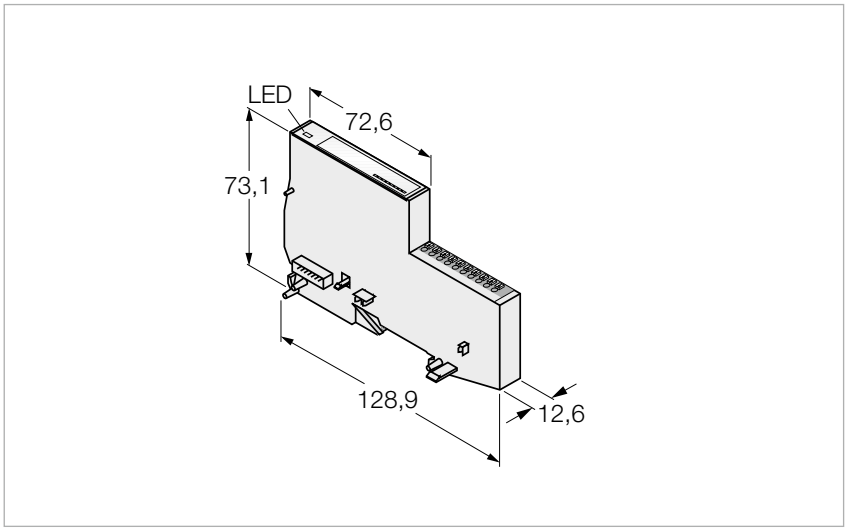

Features

- Fieldbus-independent
- Electronics and connection technology in one housing
- Connectivity: Push-in terminals
- Protection class IP20
- 8 digital outputs, 24 VDC, max. 0.5 A, PNP switching

Pinning overview

Position	Note	Pinning assignment
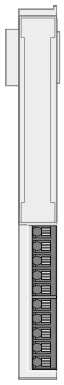	**Digital outputs**	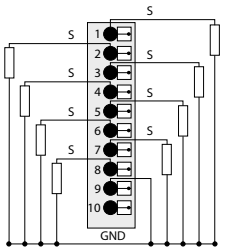

Technical data

Type	BL20-E-8DO-24VDC-0.5A-P
Ident no.	6827226
Power supply	
Number of channels	8
Nominal current from module bus	≤ 15 mA
Nominal current from field supply	≤ 3 mA
Power loss, typical	≤ 1.5 W
Outputs	
Output voltage	24 VDC
Output current per channel	0.5 A
Output type	pnp
Load type	resistive, inductive, lamp load
Load resistance, resistive	> 48 Ω
Lamp load	< 6 W
Switching frequency, resistive	< 100 Hz
Switching frequency, lamp load	< 10 Hz
Output delay	0.3 ms
Short-circuit protection	yes
Simultaneity factor	1
Electrical isolation	electronics to the field level
Environmental conditions	
Ambient temperature	0…+55 °C
Relative humidity	≤ 5 to 95 % (internal), Level RH-2, no condensation (at 45 °C storage)
Storage temperature	-25…+85 °C
Vibration test	acc. to EN 61131
Shock test	acc. to IEC 68-2-27
Drop and topple	acc. to IEC 68-2-31 and free fall to IEC 68-2-32
Electro-magnetic compatibility	acc. to EN 61131-2
Mechanical data	
Protection class	IP20
Dimensions	12.6 x 128.6 x 74.6 mm
Approval | Certification	ATEX, IECEx, $_{c}$UL$_{us}$, $_{c}$FM$_{us}$, GOST

Output module, digital, 24 VDC, 0.5 A, PNP, 16-channel

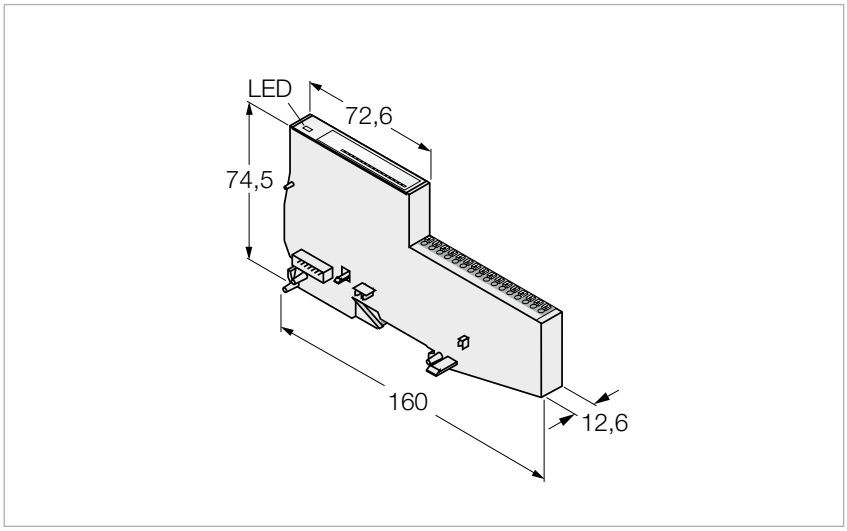

Features

- Fieldbus-independent
- Electronics and connection technology in one housing
- Connectivity: Push-in terminals
- Protection class IP20
- 16 digital outputs, 24 VDC, max. 0.5 A, PNP switching

Pinning overview

Position	Note	Pinning assignment
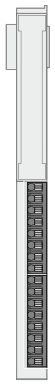	**Digital outputs**	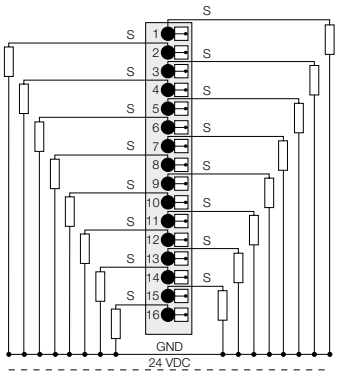

Hans Turck GmbH & Co. KG ▪ Tel. +49 208 49 52-0 ▪ Fax +49 208 49 52-264

Technical data

Type	BL20-E-16DO-24VDC-0.5A-P
Ident no.	6827230
Power supply	
Number of channels	16
Nominal current from module bus	≤ 25 mA
Nominal current from field supply	≤ 3 mA
Power loss, typical	≤ 1.5 W
Outputs	
Output voltage	24 VDC
Output current per channel	0.5 A
Output type	pnp
Load type	resistive, inductive, lamp load
Load resistance, resistive	> 48 Ω
Lamp load	< 6 W
Switching frequency, resistive	< 100 Hz
Switching frequency, lamp load	< 10 Hz
Output delay	0.3 ms
Short-circuit protection	yes
Simultaneity factor	0.5
Electrical isolation	electronics to the field level
Environmental conditions	
Ambient temperature	0…+55 °C
Relative humidity	≤ 5 to 95 % (internal), Level RH-2, no condensation (at 45 °C storage)
Storage temperature	-25…+85 °C
Vibration test	acc. to EN 61131
Shock test	acc. to IEC 68-2-27
Drop and topple	acc. to IEC 68-2-31 and free fall to IEC 68-2-32
Electro-magnetic compatibility	acc. to EN 61131-2
Mechanical data	
Protection class	IP20
Dimensions	12.6 x 160 x 74.6 mm
Approval | Certification	ATEX, IECEx, $_{c}$UL$_{us}$, $_{c}$FM$_{us}$, GOST

Output module, digital, 24 VDC, 0.5 A, PNP, 16-channel

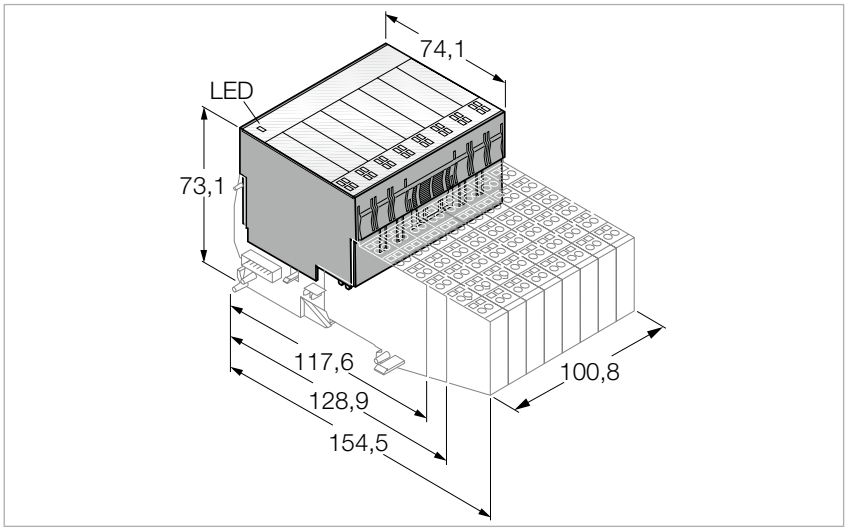

Features

- Fieldbus and connection technology independent
- Protection class IP20
- LEDs indicate status and diagnostic
- Electronics galvanically separated from the field level via optocouplers
- 16 digital outputs, 24 VDC, max. 0.5 A, PNP switching

Compatible base modules

Dimension drawing	Type	Pinning assignment
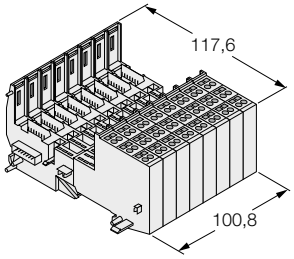	**BL20-B3T-SBC** 6827061 Tension spring connection, access to C rail **BL20-B3S-SBC** 6827062 Screw connection, access to C rail	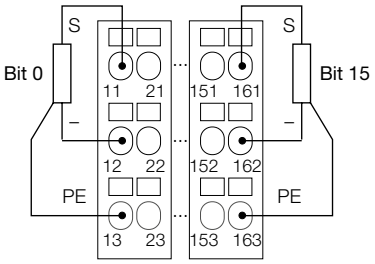

Technical data

Type	BL20-16DO-24VDC-0.5A-P
Ident no.	6827027
Power supply	
Number of channels	16
Nominal current from module bus	≤ 120 mA
Nominal current from field supply	≤ 50 mA
Power loss, typical	≤ 4 W
Outputs	
Output voltage	24 VDC
Output current per channel	0.5 A
Output type	pnp
Load type	resistive, inductive, lamp load
Load resistance, resistive	> 48 Ω
Load resistance, inductive	< 1.2 H
Lamp load	< 6 W
Switching frequency, resistive	< 100 Hz
Output delay	0.1 ms
Short-circuit protection	yes
Simultaneity factor	1
Electrical isolation	electronics to the field level
Environmental conditions	
Ambient temperature	0…+55 °C
Relative humidity	≤ 5 to 95 % (internal), Level RH-2, no condensation (at 45 °C storage)
Storage temperature	-25…+85 °C
Vibration test	acc. to EN 61131
Shock test	acc. to IEC 68-2-27
Drop and topple	acc. to IEC 68-2-31 and free fall to IEC 68-2-32
Electro-magnetic compatibility	acc. to EN 61131-2
Mechanical data	
Protection class	IP20
Dimensions	100.8 x 74.1 x 55.4 mm
Approval | Certification	ATEX, IECEx, $_{c}$UL$_{us}$, $_{c}$FM$_{us}$, GOST

Output module, digital, 24 VDC, 0.5 A, PNP, 32-channel

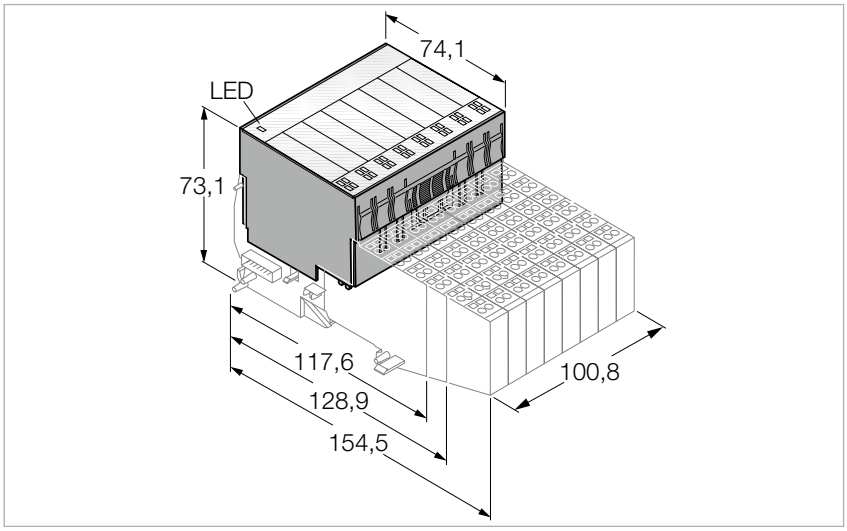

Features

- Fieldbus and connection technology independent
- Protection class IP20
- LEDs indicate status and diagnostic
- Electronics galvanically separated from the field level via optocouplers
- 32 digital outputs, 24 VDC, max. 0.5 A, PNP switching

Compatible base modules

Dimension drawing	Type	Pinning assignment
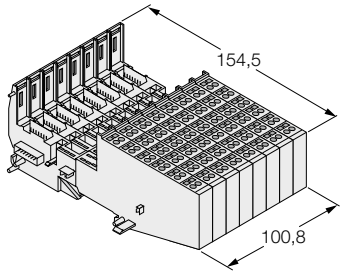	**BL20-B6T-SBCSBC** 6827218 Tension spring connection, access to C rail **BL20-B6S-SBCSBC** 6827219 Screw connection, access to C rail	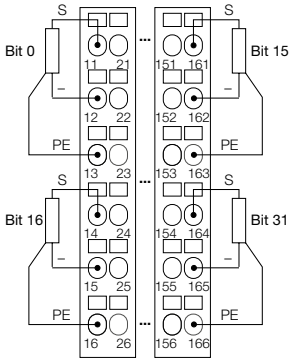

Hans Turck GmbH & Co. KG ▪ Tel. +49 208 49 52-0 ▪ Fax +49 208 49 52-264

Technical data

Type	BL20-32DO-24VDC-0.5A-P
Ident no.	6827220
Power supply	
Number of channels	32
Nominal current from module bus	≤ 120 mA
Nominal current from field supply	≤ 50 mA
Power loss, typical	≤ 4 W
Outputs	
Output voltage	24 VDC
Output current per channel	0.5 A
Output type	pnp
Load type	resistive, inductive, lamp load
Load resistance, resistive	> 48 Ω
Load resistance, inductive	< 1.2 H
Lamp load	< 6 W
Switching frequency, resistive	< 100 Hz
Output delay	0.3 ms
Short-circuit protection	yes
Simultaneity factor	1
Electrical isolation	electronics to the field level
Environmental conditions	
Ambient temperature	0…+55 °C
Relative humidity	≤ 5 to 95 % (internal), Level RH-2, no condensation (at 45 °C storage)
Storage temperature	-25…+85 °C
Vibration test	acc. to EN 61131
Shock test	acc. to IEC 68-2-27
Drop and topple	acc. to IEC 68-2-31 and free fall to IEC 68-2-32
Electro-magnetic compatibility	acc. to EN 61131-2
Mechanical data	
Protection class	IP20
Dimensions	100.8 x 74.1 x 55.4 mm
Approval | Certification	ATEX, IECEx, $_{c}$UL$_{us}$, $_{c}$FM$_{us}$, GOST

Input module, analog, current, 2-channel

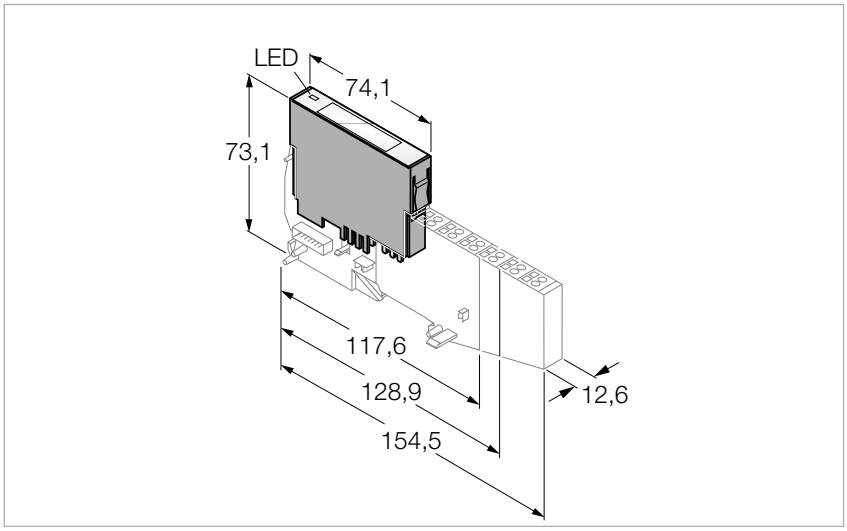

Features

- Fieldbus and connection technology independent
- Protection class IP20
- LEDs indicate status and diagnostic
- Electronics galvanically separated from the field level via optocouplers
- 2 analog inputs 0/4…20 mA

Compatible base modules

Dimension drawing	Type	Pinning assignment
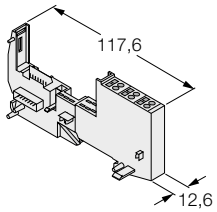	**BL20-S3T-SBB** 6827044 Tension spring connection with external sensor supply **BL20-S3S-SBB** 6827045 Screw connection with external sensor supply	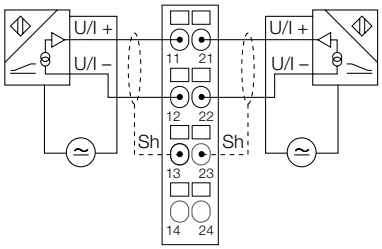
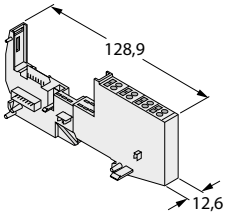	**BL20-S4T-SBBS** 6827046 Tension spring connection **BL20-S4S-SBBS** 6827047 Screw connection	2-wire connection 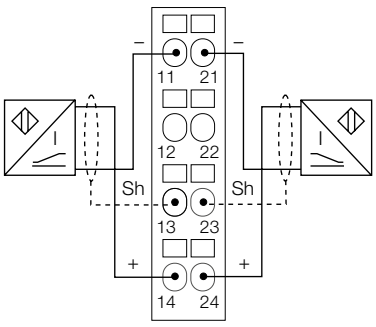 3-wire connection 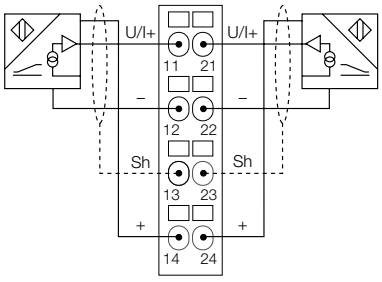

Technical data

Type	BL20-2AI-I(0/4…20MA)
Ident no.	6827021
Power supply	
Number of channels	2
Nominal current from module bus	≤ 35 mA
Nominal current from field supply	≤ 12 mA
Power loss, typical	≤ 1 W
Inputs	
Input type	0/4…20 mA
Input resistance	< 0.125 kΩ
Max. input current	50 mA
Electrical isolation	electronics to the field level
Response characteristic	
Resolution	16 Bit
Basic fault limit at 23 °C	< 0.2 %
Repeatability	0.05 %
Temperature coefficient	< 300 ppm / °C of full scale
Measuring principle	Delta Sigma
Measured-value display	16 bit signed integer
	12 bit full range left-justified
Cycle time	≤ 10 ms
Environmental conditions	
Ambient temperature	0…+55 °C
Relative humidity	≤ 5 to 95 % (internal), Level RH-2, no condensation (at 45 °C storage)
Storage temperature	-25…+85 °C
Vibration test	acc. to EN 61131
Shock test	acc. to IEC 68-2-27
Drop and topple	acc. to IEC 68-2-31 and free fall to IEC 68-2-32
Electro-magnetic compatibility	acc. to EN 61131-2
Mechanical data	
Protection class	IP20
Dimensions	12.6 x 74.1 x 55.4 mm
Approval | Certification	ATEX, IECEx, $_{c}UL_{us}$, $_{c}FM_{us}$, GOST

Input module, analog, current, HART®, 2-channel

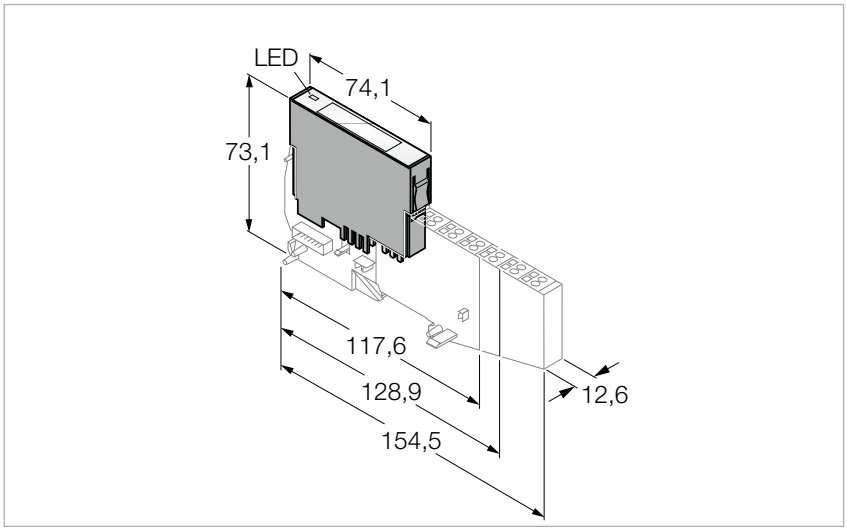

Features

- Fieldbus and connection technology independent
- Protection class IP20
- LEDs indicate status and diagnostic
- Electronics galvanically separated from the field level via optocouplers
- 2 analog inputs 0/4…20 mA
- HART®

Compatible base modules

Dimension drawing	Type	Pinning assignment
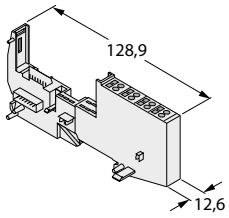	**BL20-S4T-SBBS** 6827046 Tension spring connection **BL20-S4S-SBBS** 6827047 Screw connection	2-wire connection for passive HART® sensors 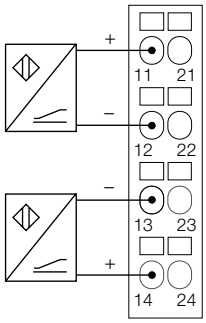 4-wire connection for active HART® sensors 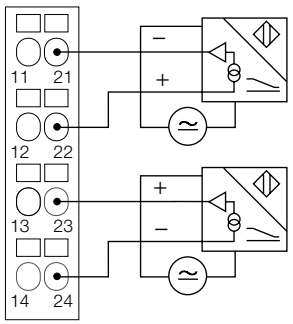

Technical data

Type	BL20-2AIH-I
Ident no.	6827331
Power supply	
Number of channels	2
Nominal current from module bus	≤ 30 mA
Nominal current from field supply	≤ 20 mA
Power loss, typical	≤ 1 W
Inputs	
Input type	0/4…20 mA
Input resistance	> 250 Ω
Max. input current	24 mA
Electrical isolation	electronics to the field level
Response characteristic	
Resolution	16 Bit
Basic fault limit at 23 °C	< 0.1 %
Repeatability	0.1 %
Temperature coefficient	< 150 ppm / °C of full scale
Measuring principle	Delta Sigma
Measured-value display	16 Bit signed integer, NE43(PA), extended
Cycle time	≤ 250 ms
Environmental conditions	
Ambient temperature	0…+55 °C
Relative humidity	≤ 5 to 95 % (internal), Level RH-2, no condensation (at 45 °C storage)
Storage temperature	-25…+85 °C
Vibration test	acc. to EN 61131
Shock test	acc. to IEC 68-2-27
Drop and topple	acc. to IEC 68-2-31 and free fall to IEC 68-2-32
Electro-magnetic compatibility	acc. to EN 61131-2
Mechanical data	
Protection class	IP20
Dimensions	12.6 x 74.1 x 55.4 mm
Approval | Certification	ATEX, IECEx, $_{c}$UL$_{us}$, $_{c}$FM$_{us}$, GOST

Input module, analog, voltage, 2-channel

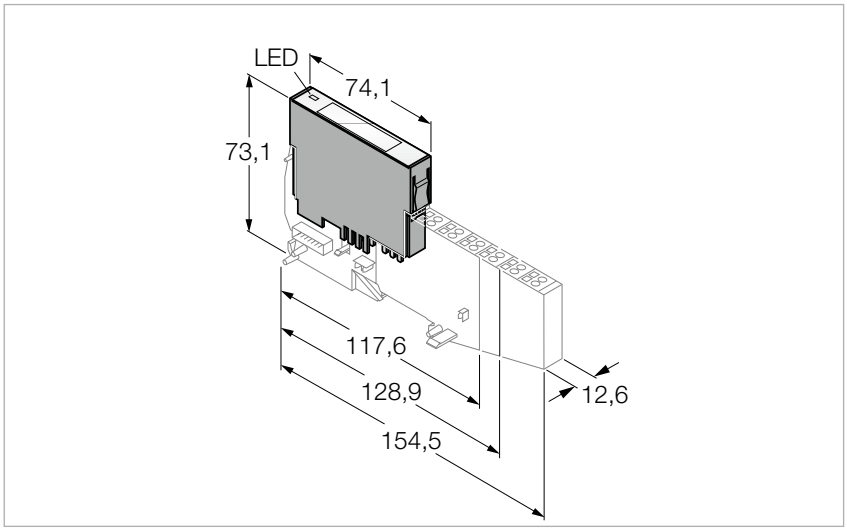

Features

- Fieldbus and connection technology independent
- Protection class IP20
- LEDs indicate status and diagnostic
- Electronics galvanically separated from the field level via optocouplers
- 2 analog inputs -10/0 …+10 VDC

Compatible base modules

Dimension drawing	Type	Pinning assignment
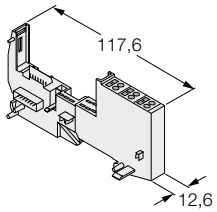	**BL20-S3T-SBB** 6827044 Tension spring connection with external sensor supply **BL20-S3S-SBB** 6827045 Screw connection with external sensor supply	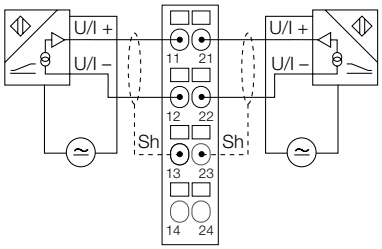
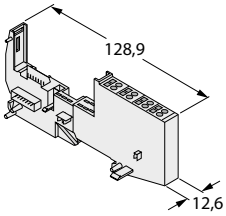	**BL20-S4T-SBBS** 6827046 Tension spring connection **BL20-S4S-SBBS** 6827047 Screw connection	2-wire connection 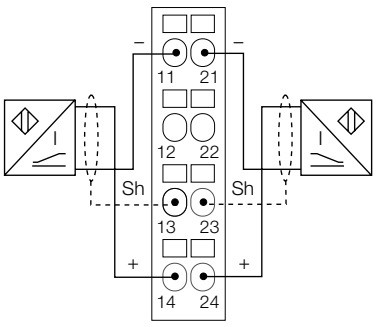 3-wire connection 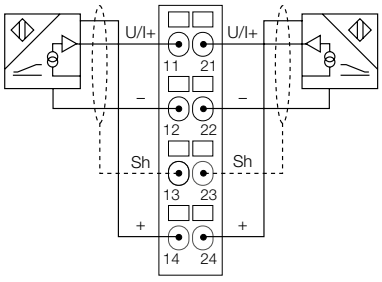

Hans Turck GmbH & Co. KG ▪ Tel. +49 208 49 52-0 ▪ Fax +49 208 49 52-264

Technical data

Type	BL20-2AI-U(-10/0…+10VDC)
Ident no.	6827022
Power supply	
Number of channels	2
Nominal current from module bus	≤ 35 mA
Nominal current from field supply	≤ 12 mA
Power loss, typical	≤ 1 W
Inputs	
Input type	-10/0 …10 VDC
Input resistance	< 98.5 kΩ
Max. input voltage	35 V continuous
Electrical isolation	electronics to the field level
Response characteristic	
Resolution	16 Bit
Basic fault limit at 23 °C	< 0.2 %
Repeatability	0.05 %
Temperature coefficient	< 150 ppm / °C of full scale
Measuring principle	Delta Sigma
Measured-value display	16 bit signed integer 12 bit full range left-justified
Cycle time	≤ 10 ms
Environmental conditions	
Ambient temperature	0…+55 °C
Relative humidity	≤ 5 to 95 % (internal), Level RH-2, no condensation (at 45 °C storage)
Storage temperature	-25…+85 °C
Vibration test	acc. to EN 61131
Shock test	acc. to IEC 68-2-27
Drop and topple	acc. to IEC 68-2-31 and free fall to IEC 68-2-32
Electro-magnetic compatibility	acc. to EN 61131-2
Mechanical data	
Protection class	IP20
Dimensions	12.6 x 74.1 x 55.4 mm
Approval | Certification	ATEX, IECEx, $_{c}UL_{us}$, $_{c}FM_{us}$, GOST

Input module, analog, temperature, Pt/Ni, 2/3-wire, 2-channel

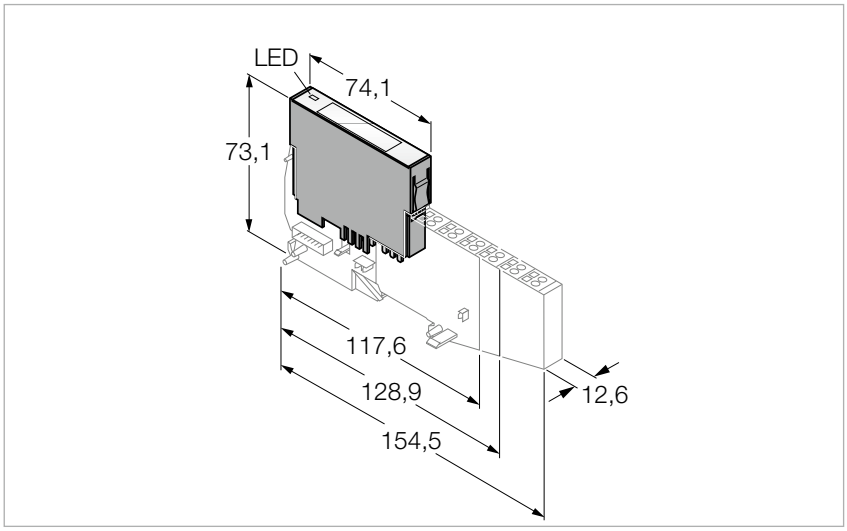

Features

- Fieldbus and connection technology independent
- Protection class IP20
- LEDs indicate status and diagnostic
- Electronics galvanically separated from the field level via optocouplers
- 2 analog inputs for Pt100, Pt200, Pt500 and Pt1000 as well as for Ni100 and Ni1000

Compatible base modules

Dimension drawing	Type	Pinning assignment
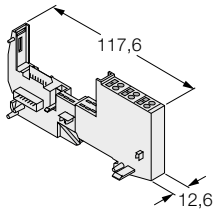	**BL20-S3T-SBB** 6827044 Tension spring connection **BL20-S3S-SBB** 6827045 Screw connection	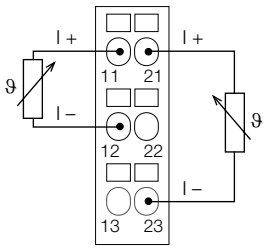
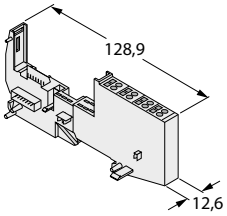	**BL20-S4T-SBBS** 6827046 Tension spring connection **BL20-S4S-SBBS** 6827047 Screw connection	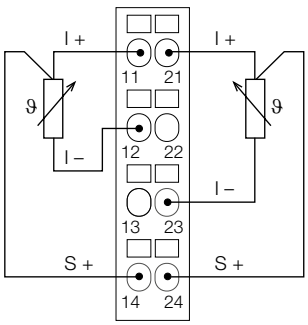

Hans Turck GmbH & Co. KG ▪ Tel. +49 208 49 52-0 ▪ Fax +49 208 49 52-264

Technical data

Type	BL20-2AI-PT/NI-2/3
Ident no.	6827017
Power supply	
Number of channels	2
Nominal current from module bus	≤ 45 mA
Nominal current from field supply	≤ 30 mA
Power loss, typical	≤ 1 W
Inputs	
Input type	Pt100, Pt200, Pt500, Pt1000, Ni100, Ni1000
Electrical isolation	electronics to the field level
Measuring current	< 1 mA
Response characteristic	
Resolution	16 Bit
Basic fault limit at 23 °C	< 0.2 %
Repeatability	0.05 %
Temperature coefficient	< 300 ppm / °C of full scale
Measured-value display	16 bit signed integer
	12 bit full range left-justified
Cycle time	≤ 200 ms
Environmental conditions	
Ambient temperature	0…+55 °C
Relative humidity	≤ 5 to 95 % (internal), Level RH-2, no condensation (at 45 °C storage)
Storage temperature	-25…+85 °C
Vibration test	acc. to EN 61131
Shock test	acc. to IEC 68-2-27
Drop and topple	acc. to IEC 68-2-31 and free fall to IEC 68-2-32
Electro-magnetic compatibility	acc. to EN 61131-2
Mechanical data	
Protection class	IP20
Dimensions	12.6 x 74.1 x 55.4 mm
Approval | Certification	ATEX, IECEx, $_{c}$UL$_{us}$, $_{c}$FM$_{us}$, GOST

Input module, analog, temperature, thermocouples, 2-channel

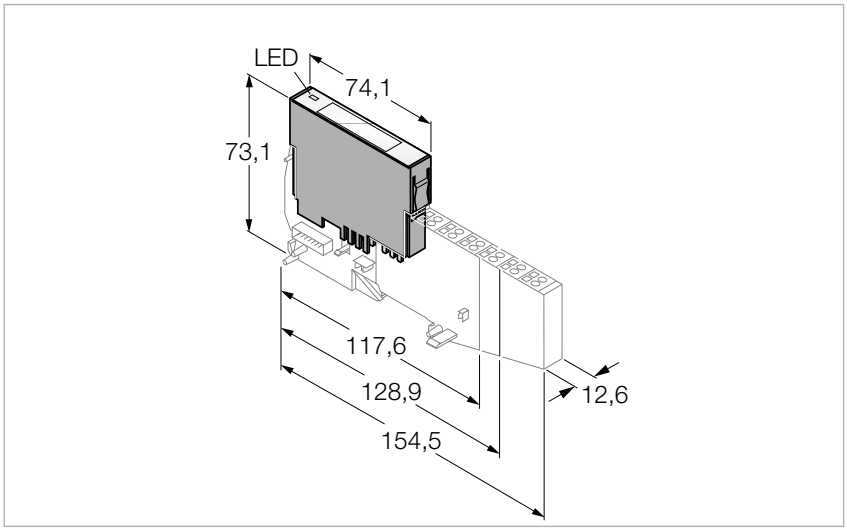

Features

- Fieldbus and connection technology independent
- Protection class IP20
- LEDs indicate status and diagnostic
- Electronics galvanically separated from the field level via optocouplers
- 2 analog inputs for connection of thermocouples, types B, E, J, K, N, R, S and T
- Base module with internal cold junction compensation

Compatible base modules

Dimension drawing	Type	Pinning assignment
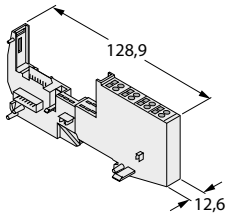	**BL20-S4T-SBBS-CJ** 6827048 Tension spring connection, a: Internal cold junction compensation in the base module **BL20-S4S-SBBS-CJ** 6827049 Screw connection, a: Internal cold junction compensation in the base module	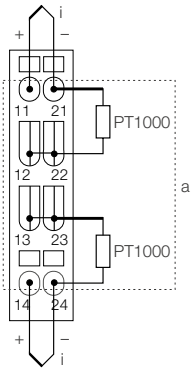

Technical data

Type	BL20-2AI-THERMO-PI
Ident no.	6827020
Power supply	
Number of channels	2
Nominal current from module bus	≤ 45 mA
Nominal current from field supply	≤ 30 mA
Power loss, typical	≤ 1 W
Inputs	
Input type	types B, E, J, K, N, R, S, T
Electrical isolation	electronics to the field level
Voltage resolution	± 50 mV: < 2 µV ± 100 mV: < 4 µV ± 500 mV: < 20 µV ± 1000 mV: < 50 µV
Response characteristic	
Resolution	16 Bit
Basic fault limit at 23 °C	< 0.2 %
Repeatability	0.05 %
Temperature coefficient	< 300 ppm / °C of full scale
Measured-value display	16 bit signed integer 12 bit full range left-justified
Cycle time	≤ 300 ms
Environmental conditions	
Ambient temperature	0…+55 °C
Relative humidity	≤ 5 to 95 % (internal), Level RH-2, no condensation (at 45 °C storage)
Storage temperature	-25…+85 °C
Vibration test	acc. to EN 61131
Shock test	acc. to IEC 68-2-27
Drop and topple	acc. to IEC 68-2-31 and free fall to IEC 68-2-32
Electro-magnetic compatibility	acc. to EN 61131-2
Mechanical data	
Protection class	IP20
Dimensions	12.6 x 74.1 x 55.4 mm
Approval | Certification	ATEX, IECEx, $_{c}$UL$_{us}$, $_{c}$FM$_{us}$, GOST

Input module, analog, voltage/current, 4-channel

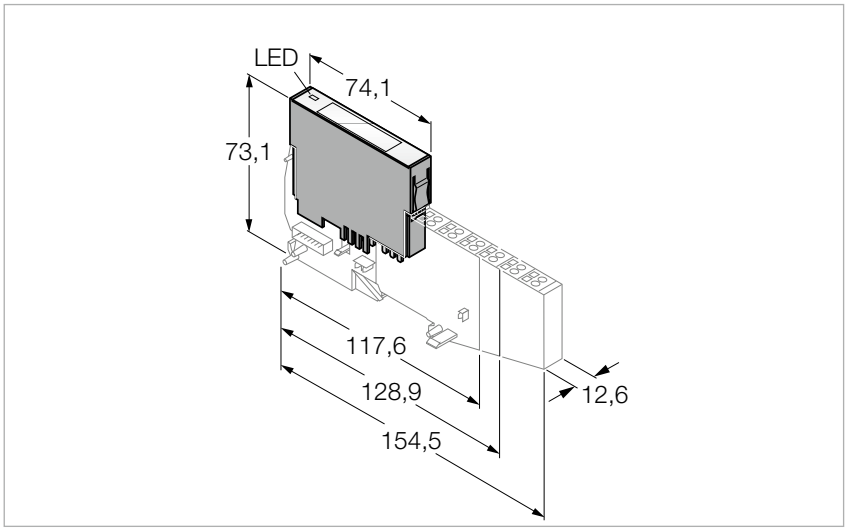

Features

- Fieldbus and connection technology independent
- Protection class IP20
- LEDs indicate status and diagnostic
- Electronics galvanically separated from the field level via optocouplers
- 4 analog inputs
- 0/4 … 20 mA or 10/0 … +10 VDC
- Selectable per channel

Compatible base modules

Dimension drawing	Type	Pinning assignment
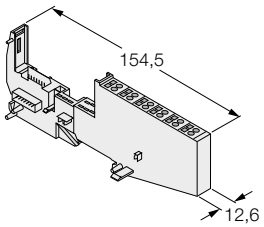	**BL20-S6T-SBCSBC** 6827064 Tension spring connection **BL20-S6S-SBCSBC** 6827066 Screw connection	2-wire connection 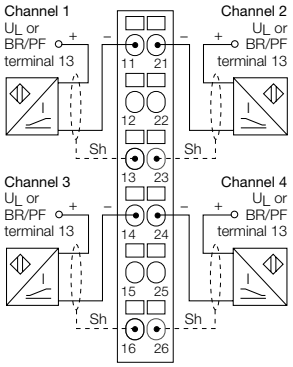 3-wire connection 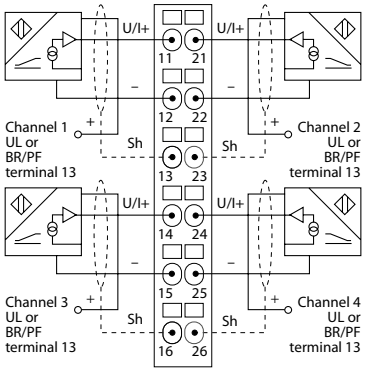 4-wire connection 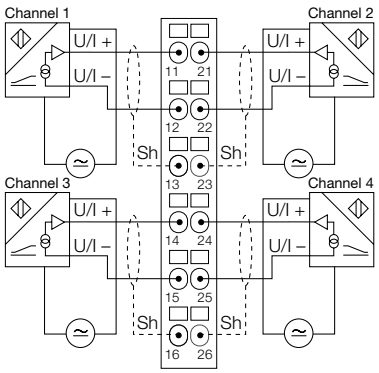

Technical data

Type	BL20-4AI-U/I
Ident no.	6827217
Power supply	
Number of channels	4
Nominal current from module bus	≤ 50 mA
Nominal current from field supply	≤ 20 mA
Power loss, typical	≤ 1 W
Inputs	
Input type	0/4 … 20 mA or -10/0 … 10 VDC
Input resistance	< 62 Ω (current) resp. > 98.5 kΩ (voltage)
Max. input current	50 mA
Max. input voltage	35 V continuous
Electrical isolation	electronics to the field level
Response characteristic	
Resolution	16 Bit
Basic fault limit at 23 °C	< 0.3 %
Repeatability	0.05 %
Temperature coefficient	< 300 ppm / °C of full scale
Measuring principle	Delta Sigma
Cycle time	≤ 25 ms
Environmental conditions	
Ambient temperature	0…+55 °C
Relative humidity	≤ 5 to 95 % (internal), Level RH-2, no condensation (at 45 °C storage)
Storage temperature	-25…+85 °C
Vibration test	acc. to EN 61131
Shock test	acc. to IEC 68-2-27
Drop and topple	acc. to IEC 68-2-31 and free fall to IEC 68-2-32
Electro-magnetic compatibility	acc. to EN 61131-2
Mechanical data	
Protection class	IP20
Dimensions	12.6 x 74.1 x 55.4 mm
Approval | Certification	ATEX, IECEx, $_{c}UL_{us}$, $_{c}FM_{us}$, GOST

Input module, analog, temperature, thermocouples, 4-channel

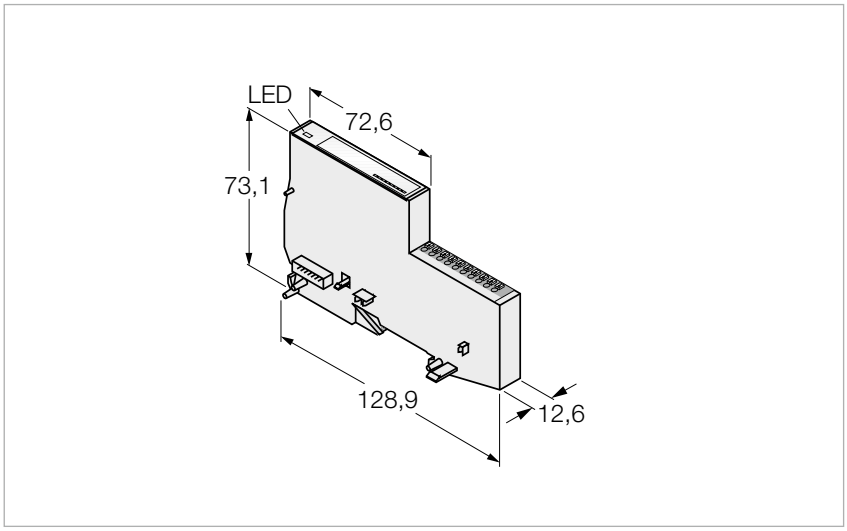

Features

- Fieldbus-independent
- Electronics and connection technology in one housing
- Connectivity: Push-in terminals
- Protection class IP20
- LEDs indicate status and diagnostic
- Electronics galvanically separated from the field level via optocouplers
- 4 analog inputs for the connection of thermocouples
- Types B, C, E, G, J, K, N, R, S and T
- Cold junction compensation via integrated Pt1000 probe

Pinning overview

Position	Note	Pinning assignment
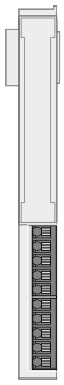	**Thermocouple inputs**	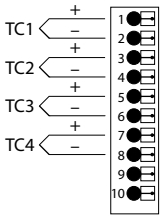

Technical data

Type	BL20-E-4AI-TC
Ident no.	6827367
Power supply	
Number of channels	4
Nominal current from module bus	≤ 50 mA
Nominal current from field supply	≤ 30 mA
Power loss, typical	≤ 1 W
Inputs	
Input type	types B, C, E, G, J, K, N, R, S, T
Input resistance	> 7 MΩ
Electrical isolation	electronics to the field level
Voltage resolution	± 50 mV: < 2 µV ± 100 mV: < 4 µV ± 500 mV: < 20 µV ± 1000 mV: < 50 µV
Response characteristic	
Resolution	16 Bit
Basic fault limit at 23 °C	< 0.2 %
Repeatability	0.05 %
Temperature coefficient	< 150 ppm / °C of full scale
Measured-value display	16 bit signed integer 12 bit full range left-justified
Environmental conditions	
Ambient temperature	0…+55 °C
Relative humidity	≤ 5 to 95 % (internal), Level RH-2, no condensation (at 45 °C storage)
Storage temperature	-25…+85 °C
Vibration test	acc. to EN 61131
Shock test	acc. to IEC 68-2-27
Drop and topple	acc. to IEC 68-2-31 and free fall to IEC 68-2-32
Electro-magnetic compatibility	acc. to EN 61131-2
Mechanical data	
Protection class	IP20
Dimensions	12.6 x 128.6 x 74.6 mm
Approval | Certification	$_{c}UL_{us}$, GOST

Input module, analog, voltage/current/temperature, 8-channel

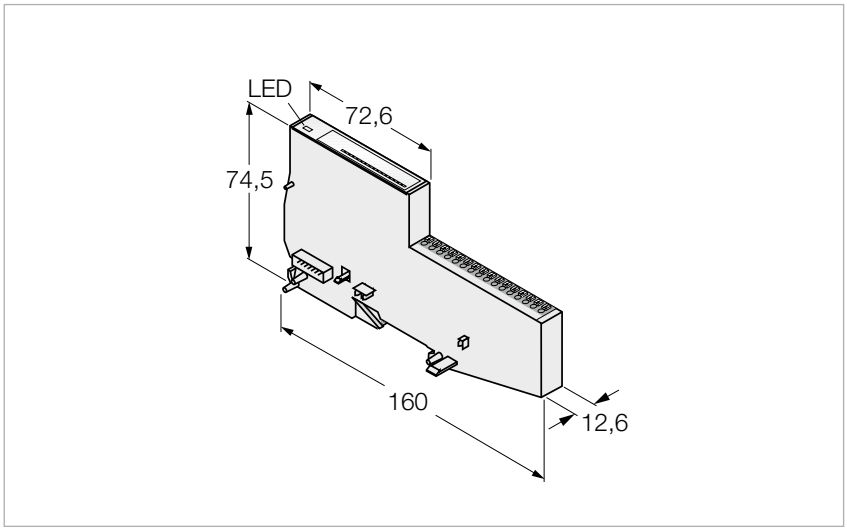

Features

- Fieldbus-independent
- Electronics and connection technology in one housing
- Connectivity: Push-in terminals
- Protection class IP20
- LEDs indicate status and diagnostic
- Electronics galvanically separated from the field level via optocouplers
- 8 analog 2-wire inputs U/I
- Passive input - External supply
- 0 … 20 mA, 4 … 20 mA, -10 … +10 VDC or 0 … +10 VDC, selectable per channel
- Alternatively: 4PT/NI inputs (always 2 analog inputs are combined to a PT/Ni 2/3-wire input)

Pinning overview

Position	Note	Pinning assignment
	**Analog inputs** The pin assignment is dependent on the sensor type. Examples of the most common 2- and 4-wire sensors with electric current or voltage signal are listed below. **Note:** Open inputs and/or unused channels should not be parameterized in the Pt/Ni or resistance (R) mode, because this may lead to minor measurement errors at adjacent channels. However, if this is necessary, the affected channels must be terminated with a resistance. Thereby the resistance value must be in the parameterized measuring range.	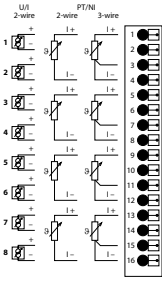
	4-wire sensor (U/I) The sensor and U_L of the BL20 system are fed from a common source. The sensor and U_L of the BL20 system are automatically on the same GND potential.	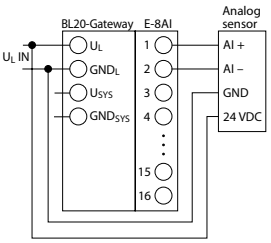
	4-wire sensor (U/I) The sensor and U_L of the BL20 system are fed from different sources. U_L of the BL20 system and AI – of the sensor must be on the same GND-potential. For this, U_L and AI – must be bridged.	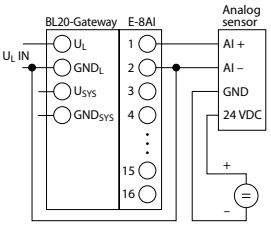
	2-wire sensor (U/I) The sensor and U_L of the BL20 system are fed from a common source. The sensor and U_L of the BL20 system are automatically on the same GND potential.	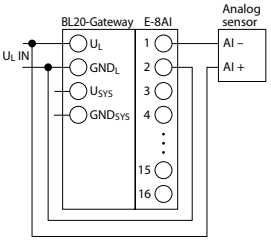

Technical data

Type	BL20-E-8AI-U/I-4PT/NI
Ident no.	6827325
Power supply	
Number of channels	8/4
Nominal current from module bus	≤ 35 mA
Nominal current from field supply	≤ 35 mA
Power loss, typical	≤ 1.5 W
Inputs	
Input type	0/4…20 mA, -10/0…10 VDC, Pt100, Pt200, Pt500, Pt1000, NI100, NI1000, 0…250 Ω, 0…400 Ω, 0…800 Ω, 0…2000 Ω, 0…4000 Ω
Input resistance	< 62 Ω (current) resp. > 98.5 kΩ (voltage)
Max. input current	current: 50 mA
Max. input voltage	Voltage: -20 VDC < U < 20 VDC
Electrical isolation	electronics to the field level
Response characteristic	
Resolution	16 Bit
Basic fault limit at 23 °C	< 0.2 %
Temperature coefficient	< 200 ppm / °C of full scale
Measured-value display	16 bit signed integer 12 bit full range left-justified 12 bit left-justified
Conversion time	< (44 x [number of actively parametrized channels]) ms
Environmental conditions	
Ambient temperature	0…+55 °C
Relative humidity	≤ 5 to 95 % (internal), Level RH-2, no condensation (at 45 °C storage)
Storage temperature	-25…+85 °C
Vibration test	acc. to EN 61131
Shock test	acc. to IEC 68-2-27
Drop and topple	acc. to IEC 68-2-31 and free fall to IEC 68-2-32
Electro-magnetic compatibility	acc. to EN 61131-2
Mechanical data	
Protection class	IP20
Dimensions	12.6 x 160 x 74.6 mm
Approval | Certification	ATEX, IECEx, $_{c}UL_{us}$, $_{c}FM_{us}$, GOST

Output module, analog, current, 2-channel

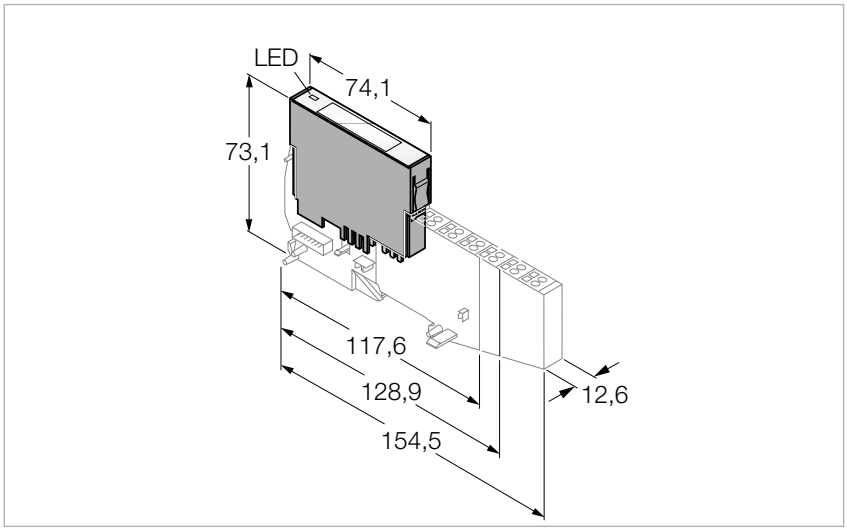

Features

- Fieldbus and connection technology independent
- Protection class IP20
- LEDs indicate status and diagnostic
- Electronics galvanically separated from the field level via optocouplers
- 2 analog outputs 0/4…20 mA

Compatible base modules

Dimension drawing	Type	Pinning assignment
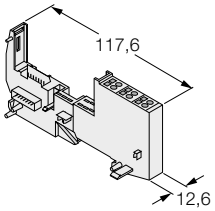	**BL20-S3T-SBB** 6827044 Tension spring connection **BL20-S3S-SBB** 6827045 Screw connection	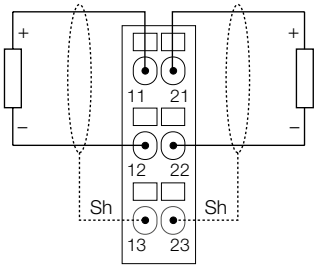

Technical data

Type	BL20-2AO-I(4…20MA)
Ident no.	6827034
Power supply	
Number of channels	2
Nominal current from module bus	≤ 40 mA
Nominal current from field supply	≤ 50 mA
Power loss, typical	≤ 1 W
Outputs	
Load resistance, resistive	< 0.45 kΩ
Load resistance, inductive	< 1 mH
Output type	0/4…20 mA
Electrical isolation	electronics to the field level
Response characteristic	
Resolution	16 Bit
Basic fault limit at 23 °C	< 0.2 %
Repeatability	0.05 %
Temperature coefficient	< 150 ppm / °C of full scale
Measured-value display	16 bit signed integer 12 bit full range left-justified
Cycle time	≤ 10 ms
Environmental conditions	
Ambient temperature	0…+55 °C
Relative humidity	≤ 5 to 95 % (internal), Level RH-2, no condensation (at 45 °C storage)
Storage temperature	-25…+85 °C
Vibration test	acc. to EN 61131
Shock test	acc. to IEC 68-2-27
Drop and topple	acc. to IEC 68-2-31 and free fall to IEC 68-2-32
Electro-magnetic compatibility	acc. to EN 61131-2
Mechanical data	
Protection class	IP20
Dimensions	12.6 x 74.1 x 55.4 mm
Approval | Certification	ATEX, IECEx, $_{c}$UL$_{us}$, $_{c}$FM$_{us}$, GOST

Output module, analog, current, HART®, 2-channel

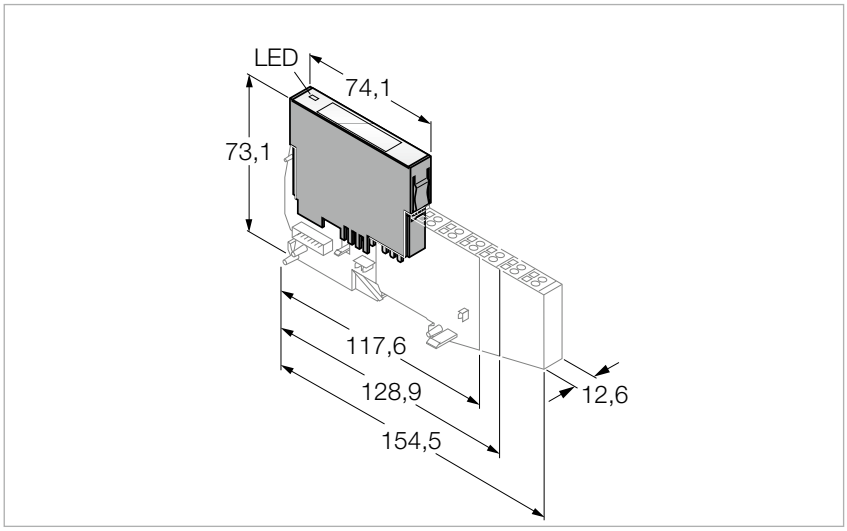

Features

- Fieldbus and connection technology independent
- Protection class IP20
- LEDs indicate status and diagnostic
- Electronics galvanically separated from the field level via optocouplers
- 2 analog outputs 0/4…20 mA
- HART®

Compatible base modules

Dimension drawing	Type	Pinning assignment
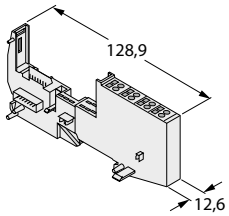	**BL20-S4T-SBBS** 6827046 Tension spring connection **BL20-S4S-SBBS** 6827047 Screw connection	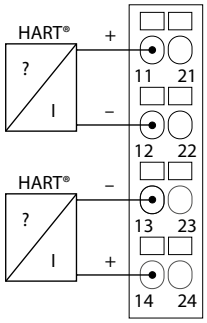

Technical data

Type	BL20-2AOH-I
Ident no.	6827332
Power supply	
Number of channels	2
Nominal current from module bus	≤ 30 mA
Nominal current from field supply	≤ 20 mA
Power loss, typical	≤ 1 W
Outputs	
Load resistance, resistive	< 0.60 kΩ
Load resistance, inductive	< 1 mH
Short circuit	24 mA
Output type	0/4…20 mA
Electrical isolation	electronics to the field level
Response characteristic	
Resolution	16 Bit
Basic fault limit at 23 °C	< 0.2 %
Repeatability	0.1 %
Temperature coefficient	< 150 ppm / °C of full scale
Measured-value display	16 Bit signed integer, NE43(PA), extended
Cycle time	≤ 250 ms
Environmental conditions	
Ambient temperature	0…+55 °C
Relative humidity	≤ 5 to 95 % (internal), Level RH-2, no condensation (at 45 °C storage)
Storage temperature	-25…+85 °C
Vibration test	acc. to EN 61131
Shock test	acc. to IEC 68-2-27
Drop and topple	acc. to IEC 68-2-31 and free fall to IEC 68-2-32
Electro-magnetic compatibility	acc. to EN 61131-2
Mechanical data	
Protection class	IP20
Dimensions	12.6 x 74.1 x 55.4 mm
Approval | Certification	ATEX, IECEx, $_{c}$UL$_{us}$, $_{c}$FM$_{us}$, GOST

Output module, analog, voltage, 2-channel

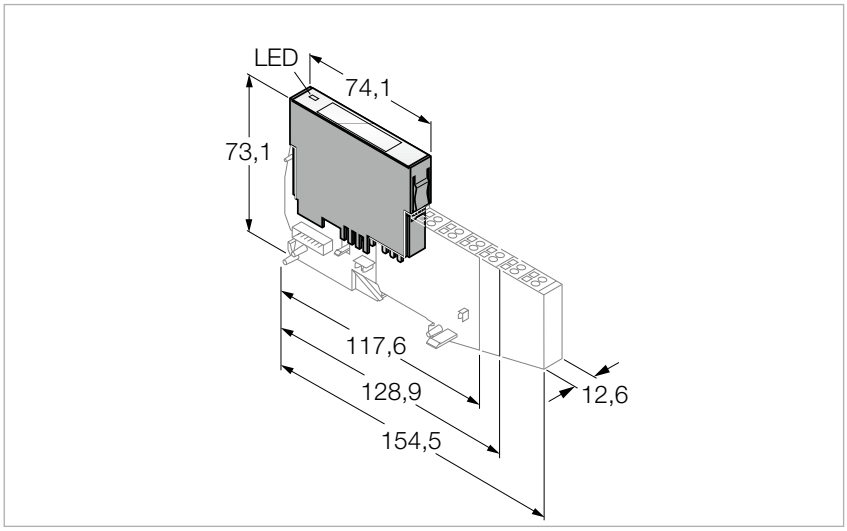

Features

- Fieldbus and connection technology independent
- Protection class IP20
- LEDs indicate status and diagnostic
- Electronics galvanically separated from the field level via optocouplers
- 2 analog outputs -10/0 …+10 VDC

Compatible base modules

Dimension drawing	Type	Pinning assignment
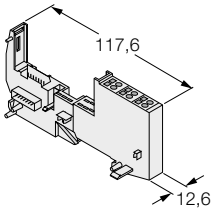	**BL20-S3T-SBB** 6827044 Tension spring connection **BL20-S3S-SBB** 6827045 Screw connection	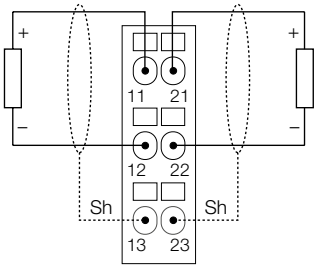

Technical data

Type	BL20-2AO-U(-10/0…+10VDC)
Ident no.	6827033
Power supply	
Number of channels	2
Nominal current from module bus	≤ 43 mA
Nominal current from field supply	≤ 50 mA
Power loss, typical	≤ 1 W
Outputs	
Load resistance, resistive	> 1 kΩ
Load resistance, capacitive	< 1 µF
Short circuit	40 mA
Output type	-10/0 …+10 VDC
Electrical isolation	electronics to the field level
Response characteristic	
Resolution	16 Bit
Basic fault limit at 23 °C	< 0.2 %
Repeatability	0.05 %
Temperature coefficient	< 300 ppm / °C of full scale
Measured-value display	16 bit signed integer 12 bit signed integer left-justified 12 bit full range left-justified
Cycle time	≤ 10 ms
Environmental conditions	
Ambient temperature	0…+55 °C
Relative humidity	≤ 5 to 95 % (internal), Level RH-2, no condensation (at 45 °C storage)
Storage temperature	-25…+85 °C
Vibration test	acc. to EN 61131
Shock test	acc. to IEC 68-2-27
Drop and topple	acc. to IEC 68-2-31 and free fall to IEC 68-2-32
Electro-magnetic compatibility	acc. to EN 61131-2
Mechanical data	
Protection class	IP20
Dimensions	12.6 x 74.1 x 55.4 mm
Approval | Certification	ATEX, IECEx, $_{c}$UL$_{us}$, $_{c}$FM$_{us}$, GOST

Output module, analog, voltage/current, 4-channel

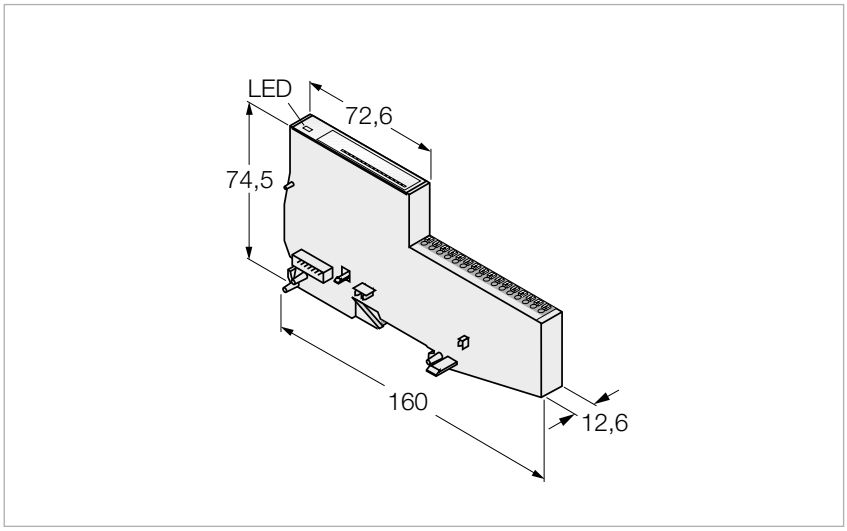

Features

- Fieldbus-independent
- Electronics and connection technology in one housing
- Connectivity: Push-in terminals
- Protection class IP20
- LEDs indicate status and diagnostic
- Electronics galvanically separated from the field level via optocouplers
- 4 analog outputs
- 0…20 mA, 4…20 mA, -10…+10 VDC or 0…+10 VDC
- Selectable per channel

Pinning overview

Position	Note	Pinning assignment
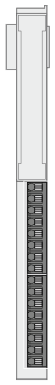	**Analog outputs**	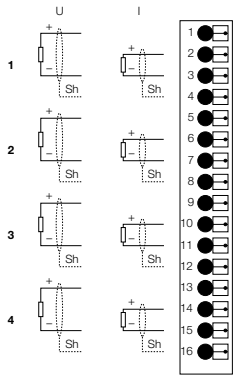

Technical data

Type	BL20-E-4AO-U/I
Ident no.	6827328
Power supply	
Number of channels	4
Nominal current from module bus	≤ 50 mA
Nominal current from field supply	≤ 130 mA
Power loss, typical	≤ 2.6 W
Outputs	
Load resistance, resistive	< 0.45 kΩ (current) or > 1 kΩ (voltage)
Load resistance, inductive	< 0.01 mH (voltage mode)
Load resistance, capacitive	< 1 µF (current mode)
Short circuit	40 mA
Output type	0/4 … 20 mA or -10/0 … +10 VDC
Electrical isolation	electronics to the field level
Response characteristic	
Resolution	16 bit
Basic fault limit at 23 °C	< 0.2 %
Temperature coefficient	< 200 ppm / °C of full scale
Measured-value display	16 bit signed integer 12 bit left-justified
Cycle time	≤ 50 ms
Environmental conditions	
Ambient temperature	0…+55 °C
Relative humidity	≤ 5 to 95 % (internal), Level RH-2, no condensation (at 45 °C storage)
Storage temperature	-25…+85 °C
Vibration test	acc. to EN 61131
Shock test	acc. to IEC 68-2-27
Drop and topple	acc. to IEC 68-2-31 and free fall to IEC 68-2-32
Electro-magnetic compatibility	acc. to EN 61131-2
Mechanical data	
Protection class	IP20
Dimensions	12.6 x 160 x 74.6 mm
Approval | Certification	ATEX, IECEx, $_{c}$UL$_{us}$, $_{c}$FM$_{us}$, GOST

RS232 module, 1-channel

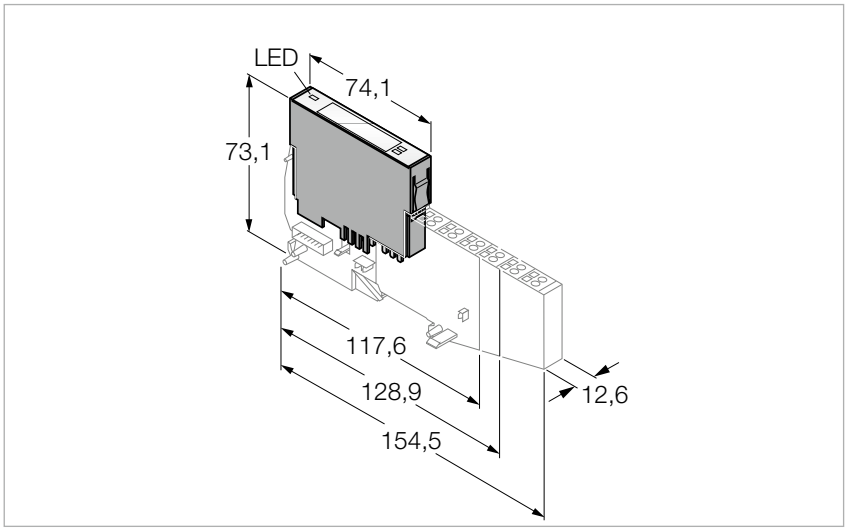

Features

- Fieldbus and connection technology independent
- Protection class IP20
- LEDs indicate status and diagnostic
- Electronics galvanically separated from the field level via optocouplers
- Transmission of serial data via RS232 interface
- For connection of printers, light screens and bar code scanners e.g.

Compatible base modules

Dimension drawing	Type	Pinning assignment
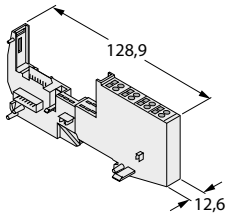	**BL20-S4T-SBBS** 6827046 Tension spring connection **BL20-S4S-SBBS** 6827047 Screw connection	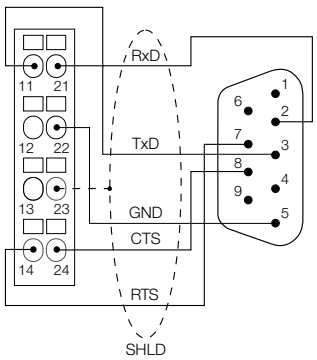

Technical data

Type	BL20-1RS232
Ident no.	6827169
Power supply	
Number of channels	1
Nominal current from module bus	≤ 140 mA
Nominal current from field supply	≤ 25 mA
Power loss, typical	≤ 1 W
Transmission	
Transmission level active (URS1)	-15 to -3 VDC
Transmission level inactive (URS0)	3 to 15 VDC
Common-mode range (UGL)	-7 to 12 VDC
Transmission signals	RxD, TxD, RTS, CTS
Data buffer received / sent	128 / 64 Byte
Cable length	15 m
Connection type	full duplex
Transmission rate	300 to 115200 bps
Parameters	Transmission rate, diagnostics, data bits, stop bits, XON - character, XOFF - character, parity, flow control
Electrical isolation	isolation of electronics and field level via optocouplers
Environmental conditions	
Ambient temperature	0…+55 °C
Relative humidity	≤ 5 to 95 % (internal), Level RH-2, no condensation (at 45 °C storage)
Storage temperature	-25…+85 °C
Vibration test	acc. to EN 61131
Shock test	acc. to IEC 68-2-27
Drop and topple	acc. to IEC 68-2-31 and free fall to IEC 68-2-32
Electro-magnetic compatibility	acc. to EN 61131-2
Mechanical data	
Protection class	IP20
Dimensions	12.6 x 74.1 x 55.4 mm
Approval | Certification	ATEX, IECEx, $_{c}$UL$_{us}$, $_{c}$FM$_{us}$, GOST

RS485/422 module, 1-channel

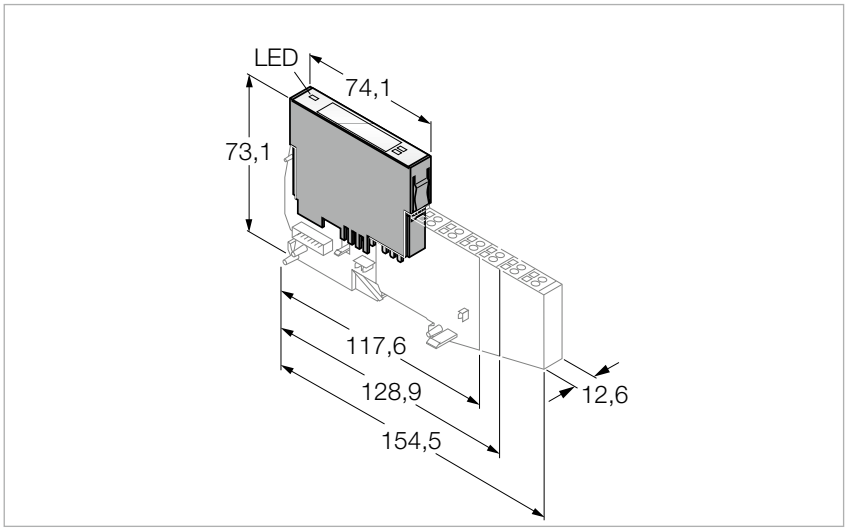

Features

- Fieldbus and connection technology independent
- Protection class IP20
- LEDs indicate status and diagnostic
- Electronics galvanically separated from the field level via optocouplers
- Transmission of serial data via RS485/ 422 interface
- For connection of printers, light screens and bar code scanners e.g.

Compatible base modules

Dimension drawing	Type	Pinning assignment
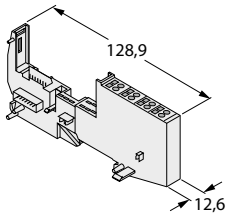	**BL20-S4T-SBBS** 6827046 Tension spring connection **BL20-S4S-SBBS** 6827047 Screw connection	Wiring diagram for RS422 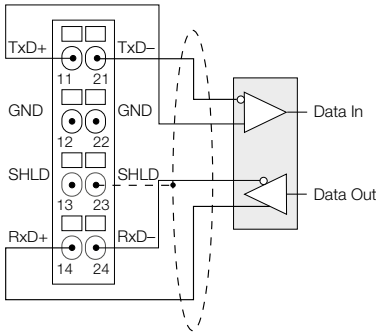 Wiring diagram for RS485 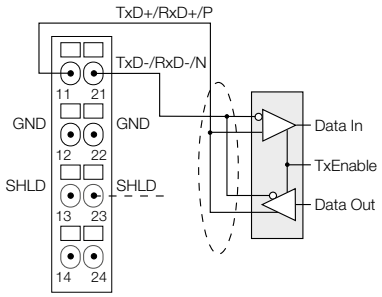

Technical data

Type	BL20-1RS485/422
Ident no.	6827165
Power supply	
Number of channels	1
Nominal current from module bus	≤ 60 mA
Nominal current from field supply	≤ 25 mA
Power loss, typical	≤ 1 W
Transmission	
Transmission signals	TxD, RxD
Data buffer received / sent	128 / 64 Byte
Cable length	30 m
Connection type	2-wire half duplex or 4-wire full duplex
Transmission rate	300 to 115200 bps
Parameters	RS485/422, transmission rate, diagnostics, data bits, stop bits, XON - character, XOFF - character, parity, flow control
Line impedance	120 Ω
Terminating resistor	external
Electrical isolation	isolation of electronics and field level via optocouplers
Environmental conditions	
Ambient temperature	0…+55 °C
Relative humidity	≤ 5 to 95 % (internal), Level RH-2, no condensation (at 45 °C storage)
Storage temperature	-25…+85 °C
Vibration test	acc. to EN 61131
Shock test	acc. to IEC 68-2-27
Drop and topple	acc. to IEC 68-2-31 and free fall to IEC 68-2-32
Electro-magnetic compatibility	acc. to EN 61131-2
Mechanical data	
Protection class	IP20
Dimensions	12.6 x 74.1 x 55.4 mm
Approval | Certification	ATEX, IECEx, $_{c}UL_{us}$, $_{c}FM_{us}$, GOST

SSI module, 1-channel

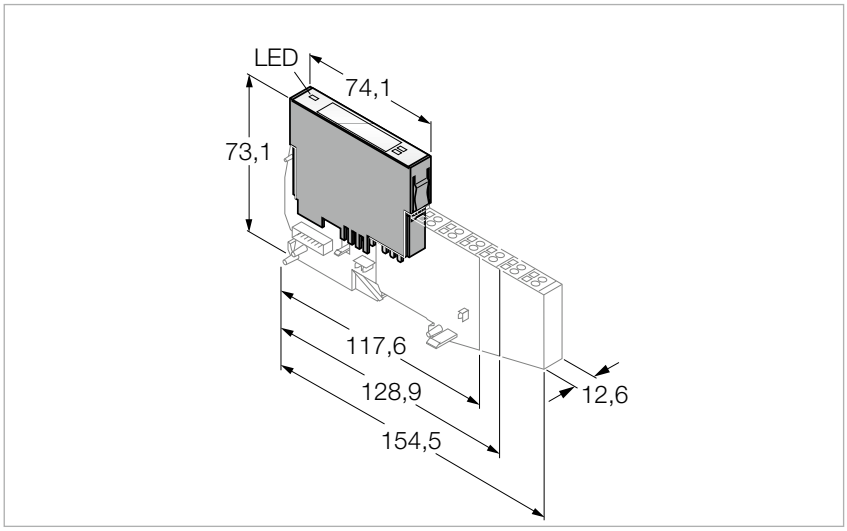

Features

- Fieldbus and connection technology independent
- Protection class IP20
- LEDs indicate status and diagnostic
- Electronics galvanically separated from the field level via optocouplers
- Connection of SSI encoder
- Transmission rate, max. 1Mbps

Compatible base modules

Dimension drawing	Type	Pinning assignment
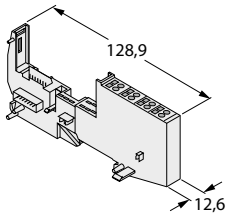	**BL20-S4T-SBBS** 6827046 Tension spring connection **BL20-S4S-SBBS** 6827047 Screw connection	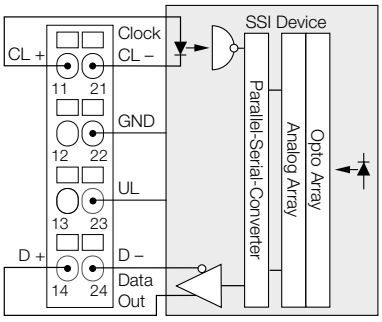

Technical data

Type	BL20-1SSI
Ident no.	6827166
Power supply	
Nominal current from module bus	≤ 50 mA
Nominal current from field supply	≤ 25 mA
Power loss, typical	≤ 1 W
Transmission	
Transmission signals	CL, D
Cable length	30 m
Connection type	4-wire full duplex (clock output/signal input)
Transmission rate	62.5 kbps up to 1 Mbps
Parameters	Transmission rate, diagnostics, data format (binary / GRAY coded), data frame bits (1-32), number of invalid bits (LSB: 0-15, MSB 0-7)
Electrical isolation	isolation of electronics and field level via optocouplers
Environmental conditions	
Ambient temperature	0…+55 °C
Relative humidity	≤ 5 to 95 % (internal), Level RH-2, no condensation (at 45 °C storage)
Storage temperature	-25…+85 °C
Vibration test	acc. to EN 61131
Shock test	acc. to IEC 68-2-27
Drop and topple	acc. to IEC 68-2-31 and free fall to IEC 68-2-32
Electro-magnetic compatibility	acc. to EN 61131-2
Mechanical data	
Protection class	IP20
Dimensions	12.6 x 74.1 x 55.4 mm
Approval | Certification	ATEX, IECEx, $_{c}$UL$_{us}$, $_{c}$FM$_{us}$, GOST

Counter/Encoder, PWM outputs, 2-channel

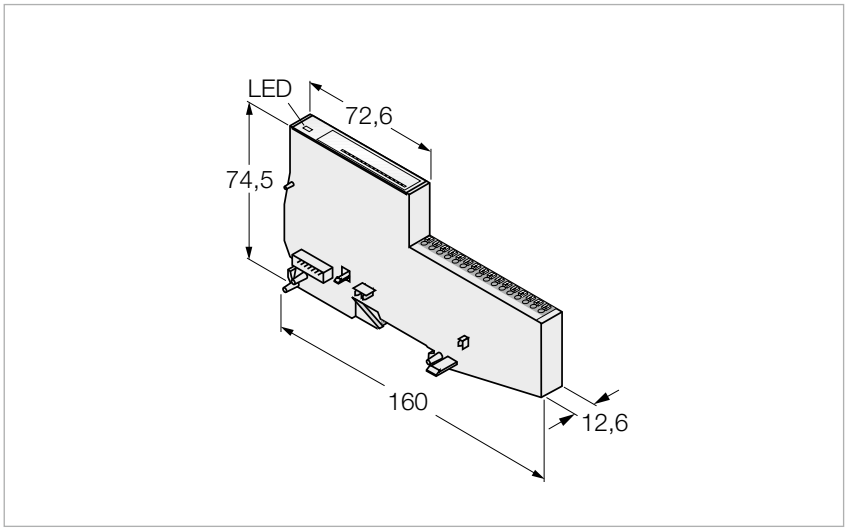

Features

- Fieldbus-independent
- Electronics and connection technology in one housing
- Connectivity: Push-in terminals
- Protection class IP20
- LEDs indicate status and diagnostic
- Electronics galvanically isolated from the field level via optocouplers
- 2 x counter/encoder channels 200 kHz
- 2 PWM outputs 20 kHz / 0.5A
- 2 digital outputs 20 kHz / 0.5A
- Counting mode: Continuous, single or periodic count
- Measuring principle: Frequency, rotational speed or period duration measurement

Pinning overview

Position	Note	Pinning assignment
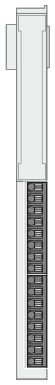	**Counter or PWM channels**	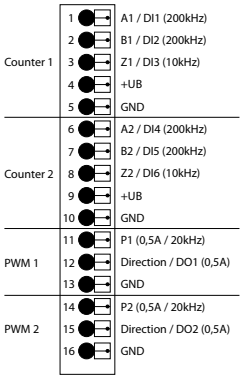

Technical data

Type	BL20-E-2CNT-2PWM
Ident no.	6827341

Power supply	
Number of channels	2/2
Nominal current from module bus	≤ 50 mA
Nominal current from field supply	≤ 20 mA
Power loss, typical	≤ 1 W

Transmission	
Frequency measurement	up to 200 kHz
Speed measurement	factor parametrizable
Period duration measurement	resolution 200 ns, max. period duration (2^{32-1}) * 200 ns
Upper count limit	0x00000000 up to 0x7FFFFFFF
Lower count limit	0x80000000 up to 0xFFFFFFFF
Electrical isolation	isolation of electronics and field level via optocouplers

Inputs	
Low level signal voltage	0 to 1 VDC / 0 to 4.5 VDC
High level signal voltage	3.5 to 30 VDC / 7.5 to 30 VDC
Low level signal current	0 … 0.1 mA / 0 … 0.4 mA
High level signal current	0.3 … 3 mA / 0.6 … 3 mA
Filter on	> 16 µs (62.5 kHz)
Filter off	< 2.5 µs (200 kHz)

Outputs	
Switching frequency	≤ 20000 Hz
Output voltage	24 VDC
Output current per channel	0.5 A
Output type	PNP
Load type	resistive, inductive, lamp load
Load resistance, resistive	> 48 Ω
Lamp load	< 10 W
Switching frequency, resistive	< 100 Hz
Inductive switching frequency	< 2 Hz
Switching frequency, lamp load	< 10 Hz
Output delay	0.2 ms
Short-circuit protection	yes
Simultaneity factor	1

Environmental conditions	
Ambient temperature	0…+55 °C
Relative humidity	≤ 5 to 95 % (internal), Level RH-2, no condensation (at 45 °C storage)
Storage temperature	-25…+85 °C
Vibration test	acc. to EN 61131
Shock test	acc. to IEC 68-2-27
Drop and topple	acc. to IEC 68-2-31 and free fall to IEC 68-2-32
Electro-magnetic compatibility	acc. to EN 61131-2

Mechanical data	
Protection class	IP20
Dimensions	12.6 x 160 x 74.6 mm

Approval | Certification	$_{c}UL_{us}$, GOST

RFID module (advanced), 2-channel

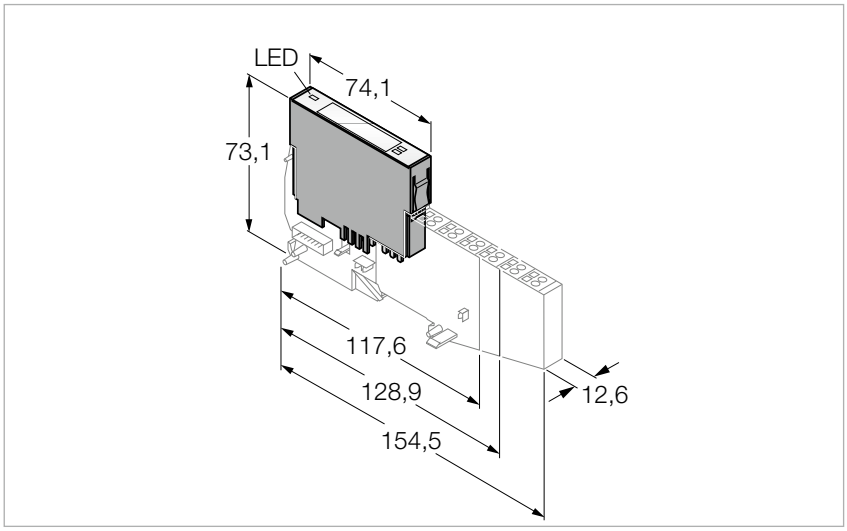

Features

- Fieldbus and connection technology independent
- Protection class IP20
- LEDs indicate status and diagnostic
- Electronics galvanically separated from the field level via optocouplers
- Connection of 2 *BL ident*® read/write heads (HF or UHF)
- Mixed operation of HF and UHF read/write heads
- Transmission rate: 115.2 kbps
- Cable length max. 50 m

Compatible base modules

Dimension drawing	Type	Pinning assignment
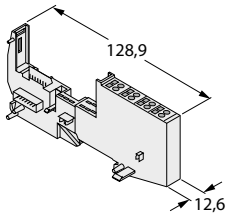	**BL20-S4T-SBBS** 6827046 Tension spring connection **BL20-S4S-SBBS** 6827047 Screw connection	Connectors …/S2500 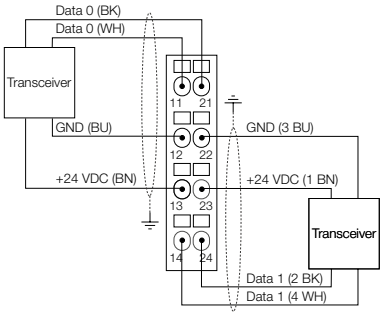 Connectors …/S2501 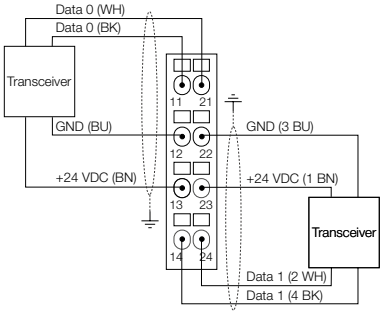 Connectors …/S2503 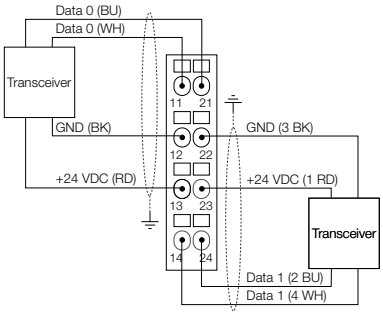

Technical data

Type	BL20-2RFID-A
Ident no.	6827233
Power supply	
Number of channels	2
Nominal current from module bus	≤ 30 mA
Nominal current from field supply	≤ 100 mA
Power loss, typical	≤ 1 W
Transmission	
Cable length	50 m
Transmission rate	115.2 kbps
Electrical isolation	isolation of electronics and field level via optocouplers
Outputs	
Sensor supply	0.25 A per channel, short-circuit proof
Environmental conditions	
Ambient temperature	0…+55 °C
Relative humidity	≤ 5 to 95 % (internal), Level RH-2, no condensation (at 45 °C storage)
Storage temperature	-25…+85 °C
Vibration test	acc. to EN 61131
Shock test	acc. to IEC 68-2-27
Drop and topple	acc. to IEC 68-2-31 and free fall to IEC 68-2-32
Electro-magnetic compatibility	acc. to EN 61131-2
Mechanical data	
Protection class	IP20
Dimensions	12.6 x 74.1 x 55.4 mm
Approval | Certification	ATEX, IECEx, $_{c}$UL$_{us}$, $_{c}$FM$_{us}$, GOST

RFID module (simple), 2-channel

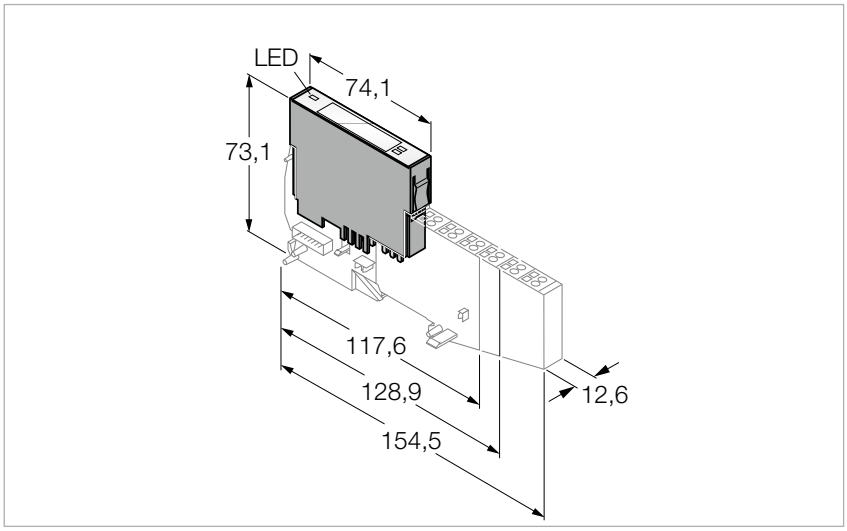

Features

- Fieldbus and connection technology independent
- A special software (function module) for integration in PLC systems is not required.
- 8 bytes of process data per read/write cycle
- LEDs indicate status and diagnostic
- Electronics galvanically separated from the field level via optocouplers
- Connection of 2 *BL ident*® read/write heads (HF or UHF)
- Mixed operation of HF and UHF read/write heads
- Transmission rate: 115.2 kbps
- Cable length max. 50 m

Compatible base modules

Dimension drawing	Type	Pinning assignment
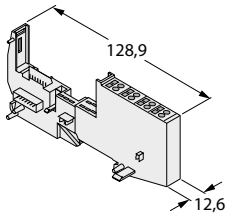	**BL20-S4T-SBBS** 6827046 Tension spring connection **BL20-S4S-SBBS** 6827047 Screw connection	Connectors …/S2500 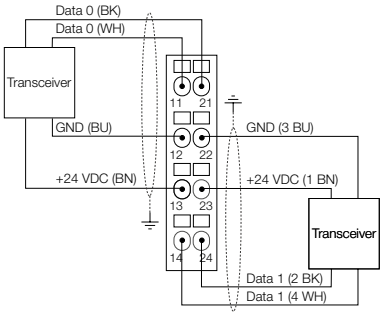 Connectors …/S2501 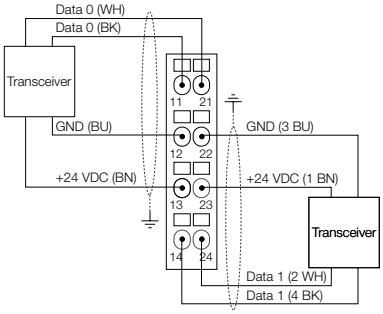 Connectors …/S2503 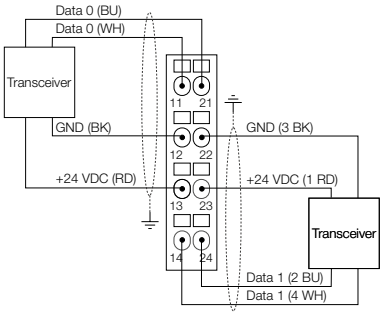

Technical data

Type	BL20-2RFID-S
Ident no.	6827306
Power supply	
Number of channels	2
Nominal current from module bus	≤ 30 mA
Nominal current from field supply	≤ 100 mA
Power loss, typical	≤ 1 W
Transmission	
Cable length	50 m
Transmission rate	115.2 kbps
Electrical isolation	isolation of electronics and field level via optocouplers
Outputs	
Sensor supply	0.25 A per channel, short-circuit proof
Environmental conditions	
Ambient temperature	0…+55 °C
Relative humidity	≤ 5 to 95 % (internal), Level RH-2, no condensation (at 45 °C storage)
Storage temperature	-25…+85 °C
Vibration test	acc. to EN 61131
Shock test	acc. to IEC 68-2-27
Drop and topple	acc. to IEC 68-2-31 and free fall to IEC 68-2-32
Electro-magnetic compatibility	acc. to EN 61131-2
Mechanical data	
Protection class	IP20
Dimensions	12.6 x 74.1 x 55.4 mm
Approval | Certification	ATEX, IECEx, $_{c}$UL$_{us}$, $_{c}$FM$_{us}$, GOST

IO-Link master, 4-channel

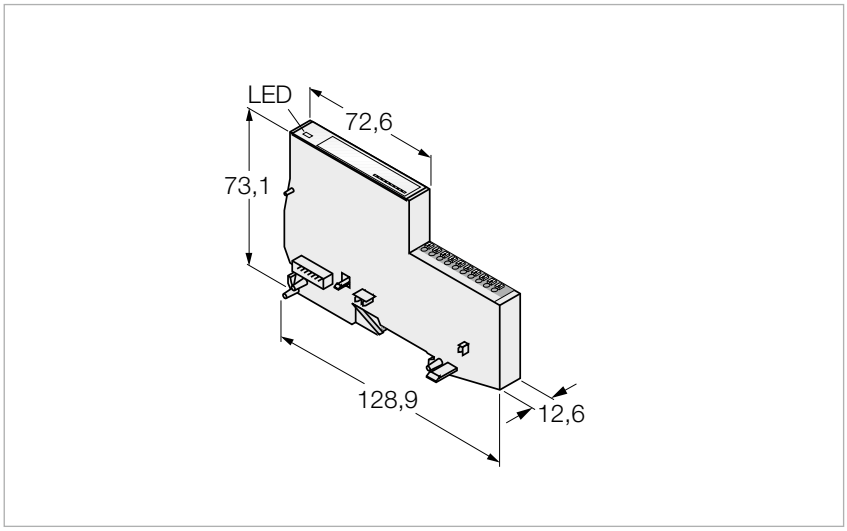

Features

- Fieldbus-independent
- Electronics and connection technology in one housing
- Connectivity: Push-in terminals
- Protection class IP20
- LEDs indicate status and diagnostic
- Electronics galvanically separated from the field level via optocouplers
- IO-Link master acc. to specification V1.1, 4-channel
- 4 universal digital channels, PNP, channel diagnostics, 0.5 A

Pinning overview

Position	Note	Pinning assignment
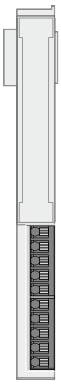	**I/O channels** The channels 1 to 4 are IO-Link master channels. Channels 5 to 8 are XSG channels (optionally usable as digital inputs or outputs). The terminals 9 and 10 are used for sensor supply. **Attention:** The IO-Link devices must be supplied with the same potential as U_L of the gateway or the BR / PF module (if used).	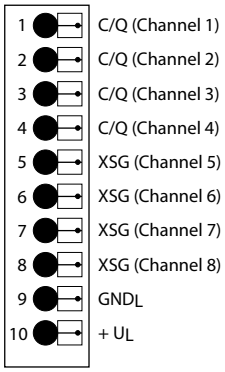

Technical data

Type	BL20-E-4IOL
Ident no.	6827385

Power supply	
Max. field supply current	10 A
Galvanic separation	500 VDC between U_{sys}, U_I and FE
Number of channels	4/4
Nominal current from module bus	≤ 40 mA
Nominal current from field supply	≤ 80 mA
Power loss, typical	≤ 2 W

Inputs	
Input type	PNP
Low level signal voltage	< 5 V
High level signal voltage	> 11 V
Low level signal current	< 1.5 mA DI / <5 mA SIO
High level signal current	2.1 … 3.7 mA DI / 5 … 11 mA SIO
Electrical isolation	electronics to the field level

Outputs	
Output voltage	24 VDC
Output type	PNP
Load type	resistive, inductive, lamp load
Load resistance, resistive	> 48 Ω
Load resistance, inductive	< 1.2 H
Lamp load	< 3 W
Switching frequency, resistive	< 200 Hz
Switching frequency, inductive	< 2 Hz
Switching frequency, lamp load	< 20 Hz
Output delay	3 ms
Electrical isolation	electronics to the field level
Connectivity	push-in

IO-Link	
IO-Link specification	Version 1.1
IO-Link port type	Class A
Frame type	Supports all specified framet types
Supported devices	Max. 14 byte input / 14 byte output
Transmission rate	4.8 kbps (COM 1) / 38.4 kbps (COM 2) / 230 kbps (COM 3)

Environmental conditions	
Ambient temperature	0…+55 °C
Relative humidity	≤ 5 to 95 % (internal), Level RH-2, no condensation (at 45 °C storage)
Storage temperature	-40…+85 °C
Vibration test	acc. to EN 61131
Shock test	acc. to IEC 68-2-27
Drop and topple	acc. to IEC 68-2-31 and free fall to IEC 68-2-32
Electro-magnetic compatibility	acc. to EN 61131-2
MTTF	388 years acc. to SN 29500 (Ed. 99) 20 °C

Mechanical data	
Protection class	IP20
Dimensions	12.6 x 128.6 x 74.6 mm

Approval | Certification	$_cUL_{us}$, GOST

BL20 System – Accessories

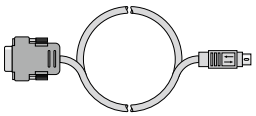	**I/O-ASSISTANT-KABEL-BL20/BL67** 6827133	RS232 service cable for Gateways with PS2 interface
	**USB-2-RS232 II** 7504030	Adapter from RS232 to USB
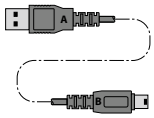	**MINI USB 2.0 cable 1.5 m** 6827388	USB 2.0 service cable for gateways with USB port
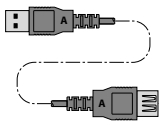	**USB 2.0 extension 5 m** 6827389	USB 2.0 extension, 5 m
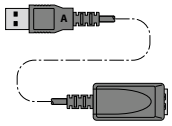	**USB 2.0 extension active 5 m** 6827390	USB 2.0 extension, 5 m, active, with integrated repeater
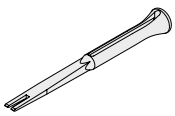	**ZBW5-2 Betätigungswerkzeug** 6827129	Tension spring tool
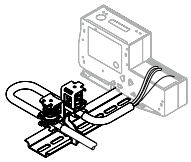	**BS3511/KLBUE4-31.5** 6827342	Shield terminal and strain relief for bus cable

	**BL20-ABPL** 6827123	End plate for a BL20 station after the last I/O module (2 pieces)
	**BL20-WEW-35/2-SW** 6827124	End retainers for fixation of a BL20 station (10 pieces)
	**BL20-LABEL-SCHEIBE** 6827070	Labels for standard electronic modules , DIN A5 sheets, perforated, laser printing, 5 x 37 labels
	BL20-LABEL-BLOCK 6827071	Labels for block electronic modules , DIN A5 sheets, perforated, laser printing, 5 x 6 labels
	**BL20-QV/1** 6827104	Jumper bar for bridging connection level 4 (14/24) of the base modules of the relay modules, 1 module wide (10 pcs.)
	BL20-QV/2 6827105	Jumper bar for bridging connection level 4 (14/24) of the base modules of the relay modules, 2 modules wide (10 pcs.)
	BL20-QV/3 6827106	Jumper bar for bridging connection level 4 (14/24) of the base modules of the relay modules, 3 modules wide (10 pcs.)
	BL20-QV/4 6827107	Jumper bar for bridging connection level 4 (14/24) of the base modules of the relay modules, 4 modules wide (10 pcs.)
	BL20-QV/5 6827108	Jumper bar for bridging connection level 4 (14/24) of the base modules of the relay modules, 5 modules wide (10 pcs.)
	BL20-QV/6 6827109	Jumper bar for bridging connection level 4 (14/24) of the base modules of the relay modules, 6 modules wide (10 pcs.)
	BL20-QV/7 6827110	Jumper bar for bridging connection level 4 (14/24) of the base modules of the relay modules, 7 modules wide (10 pcs.)
	BL20-QV/8 6827111	Jumper bar for bridging connection level 4 (14/24) of the base modules of the relay modules, 8 modules wide (10 pcs.)

BL20 System – Accessories



BL20-ANBZ-BL 6827072	Markers for labelling base modules, clear color identification of potentials on the connection level, 10 x strips of 6, blue
BL20-ANBZ-RT 6827073	Markers for labelling base modules, clear color identification of potentials on the connection level, 10 x strips of 6, red
BL20-ANBZ-GN 6827074	Markers for labelling base modules, clear color identification of potentials on the connection level, 10 x strips of 6, green
BL20-ANBZ-SW 6827075	Markers for labelling base modules, clear color identification of potentials on the connection level, 10 x strips of 6, black
BL20-ANBZ-BR 6827076	Markers for labelling base modules, clear color identification of potentials on the connection level, 10 x strips of 6, brown
BL20-ANBZ-RT/BL-BED 6827077	Markers for labelling base modules, clear color identification of potentials on the connection level, 10 x strips of 6, red/blue
BL20-ANBZ-GN/GE-BED 6827078	Markers for labelling base modules, clear color identification of potentials on the connection level, 10 x strips of 6, green/yellow
BL20-ANBZ-WS 6827079	Markers for labelling base modules, clear color identification of potentials on the connection level, 10 x strips of 6, white

Accessories - BL20-System - Accessories

PROFIBUS-DP – Accessories

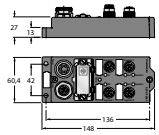	**REP-DP 0002** 6825354	PROFIBUS-DP repeater, M12 B-coded, up to 12 Mbps, IP67
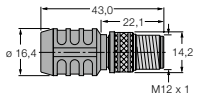	**RSS4.5-PDP-TR** 6601590	PROFIBUS-DP terminating resistor, 1 x M12 male, 5-pin, B-coded, passive
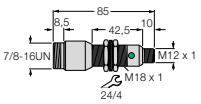	**PDP-TRA** 6825346	PROFIBUS-DP terminating resistor, 1 x M12 male, B-coded, 5-pin, active, feeding via 1 x 7/8“ male, 5-pin
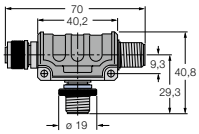	**RKSWS4.5[5]-2RSSWS** 6999021	PROFIBUS-DP T piece, M12, 5-pin, B-coded, shielded, 12 Mbps
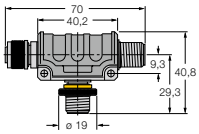	**RKSW-2RSSW45-0001** 6914180	PROFIBUS-DP T piece, M12, 5-pin, B-coded, shielded, 12 Mbps, direct T piece coupling possible
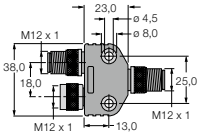	**VB2-FSW-FKW-FSW-45** 6996009	PROFIBUS-DP Y piece, M12, 5-pin, B-coded, shielded, 12 Mbps
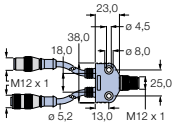	**VB2-FSW/RSSW-RKSW455-0,5M-0,5M** 6996038	PROFIBUS-DP Y piece, M12, 5-pin, B-coded, shielded, 12 Mbps, 2 x 0.5 m

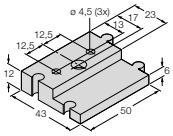	**S89/VB2-Befestigungsset** 8036078	Assembly kit for PROFIBUS-DP, CANopen/DeviceNet™, power supply Y piece
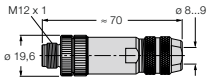	**FW-M12ST5W-G-ZF-ME-SH-9** 6604211	PROFIBUS-DP field-wireable 1 x M12 male, 5-pin, B-coded, straight, metal housing, shieldable
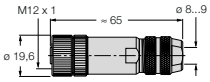	**FW-M12KU5W-G-ZF-ME-SH-9** 6604210	PROFIBUS-DP field-wireable 1 x M12 female, 5-pin, B-coded, straight, metal housing, shieldable
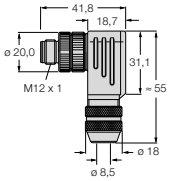	**BMSWS8251-8,5** 6904724	PROFIBUS-DP field-wireable 1 x M12 male, 5-pin, B-coded, angled, metal housing, shieldable
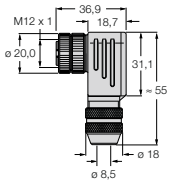	**BMWS8251-8,5** 6904723	PROFIBUS-DP field-wireable 1 x M12 female, 5-pin, B-coded, angled, metal housing, shieldable
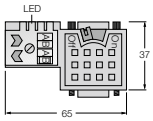	**FW-D9TLEDKU9PG-W-FC-ME-SH-8,5** 6604220	PROFIBUS-DP field-wireable 9-pin Sub-D connector, male/female, angled, insulation displacement contact (IDC), metal housing, 12 Mbps, switchable terminating resistor
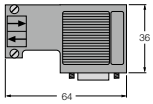	**6ES7972-0BA12-0XA0** 6890934	PROFIBUS-DP field-wireable 9-pin Sub-D male, angled, screw clamp contact, 12 Mbps, switchable terminating resistor

PROFIBUS-DP – Accessories

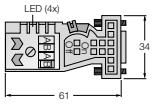	**FW-D9TLEDKU9XX-G-FC-ME-SH-8,5** 6604221	PROFIBUS-DP field-wireable 9-pin Sub-D male, straight, cutting clamp contact, metal housing, 12 Mbps, switchable terminating resistor
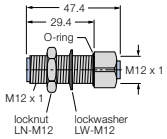	**FKW-FSW45-M12** 6602309	PROFIBUS-DP wall bushing, 1 x M12 male/female, 5-pin, B-coded, hole diameter 12.7 mm
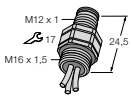	**EC-FSDW4.54-0,5/16** 8030756	PROFIBUS-DP flange, 1 x M12 male, 5-pin, B-coded, front-panel mounting (M16), rotatable, 0.5 m braid
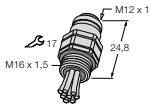	**EC-FKDW4.54-0,5/16** 8030752	PROFIBUS-DP flange, 1 x M12 female, 5-pin, B-coded, front-panel mounting (M16), rotatable, 0.5 m braid
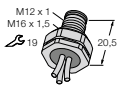	**EC-FSFDW4.54-0,5/16** 8030757	PROFIBUS-DP flange, 1 x M12 male, 5-pin, B-coded, rear-panel mounting (M16), rotatable, 0.5 m braid
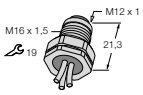	**EC-FKFDW4.54-0,5/16** 8030753	PROFIBUS-DP flange, 1 x M12 female, 5-pin, B-coded, rear-panel mounting (M16), rotatable, 0.5 m braid
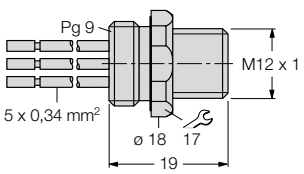	**FSW4.54-0,5** 8016038	PROFIBUS-DP flange, 1 x M12 male, 5-pin, B-coded, front-panel mounting (PG9), 0.5 m braid

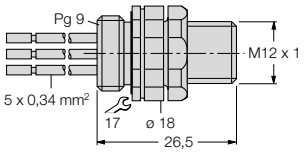	**FSDW4.54-0,5** 8015776	PROFIBUS-DP flange, 1 x M12 male, 5-pin, B-coded, front-panel mounting (PG9), rotatable, 0.5 m braid
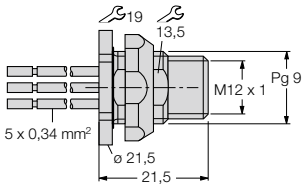	**FSFDW4.54-0,5** 8016043	PROFIBUS-DP flange, 1 x M12 male, 5-pin, B-coded, rear-panel mounting (PG9), 0.5 m braid
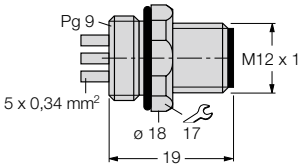	**FSW5L** 8016717	PROFIBUS-DP flange, 1 x M12 male, 5-pin, B-coded, front-panel mounting (PG9), solder tail
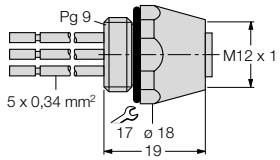	**FKW4.54-0.5** 8016042	PROFIBUS-DP flange, 1 x M12 female, 5-pin, B-coded, front-panel mounting (PG9), 0.5 m braid
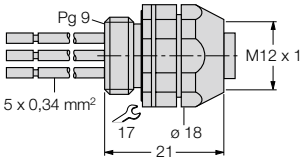	**FKDW4.54-0.5** 8015777	PROFIBUS-DP flange, 1 x M12 female, 5-pin, B-coded, front-panel mounting (PG9), rotatable, 0.5 m braid
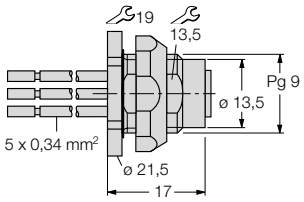	**FKFDW4.54-0,5** 8016041	PROFIBUS-DP flange, 1 x M12 female, 5-pin, B-coded, rear-panel mounting (PG9), rotatable, 0.5 m braid
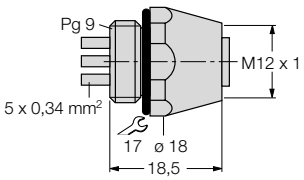	**FKW5L** 8016718	PROFIBUS-DP flange, 1 x M12 female, B-coded, front-panel mounting (PG9), solder tail

DeviceNet™/CANopen – Accessories

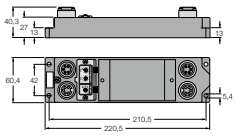

REP-DN
6825349

CANopen/DeviceNet™ repeater, 7/8“ 5-pin, up to 500 kbps, IP67

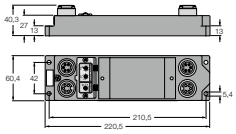

FDN-DN1
6603596

CANopen/DeviceNet™ spanner, 7/8“ 5-pin, up to 128 data bytes, IP67

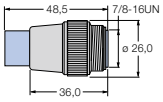

RSM57-TR2
6602011

CANopen/DeviceNet™ terminating resistor, 1 x 7/8“ male, 5-pin, passive

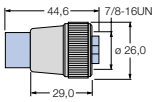

RKM57-TR2
6602065

CANopen/DeviceNet™ terminating resistor, 7/8“ female, 5-pin, passive

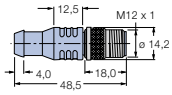

RSE57-TR2
6602308

CANopen/DeviceNet™ terminating resistor, 1 x M12 male, 5-pin, passive

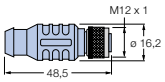

RKE57-TR2
6602629

CANopen/DeviceNet™ terminating resistor, 1 x M12 female, 5-pin, passive

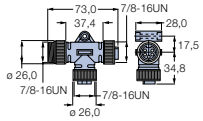

RSM-2RKM57
6602007

CANopen/DeviceNet™ / Power supply T piece, 1 x 7/8“ male, 2 x 7/8“ female, 5-pin, 0° / 0° / 0°, 9 A nominal current

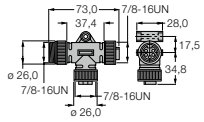	**RSM-2RKM50** 6914950	CANopen/DeviceNet™ / Power supply T piece, 1 x 7/8“ male, 2 x 7/8“ female, 5-pin, 0° / 180° / 0°, 9 A nominal current
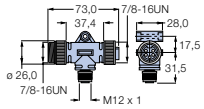	**RSM-FKM-RKM57** 6602392	CANopen/DeviceNet™ / Power supply T piece, 1 x 7/8“ male, 1 x M12 female , 1 x 7/8“ female, 5-pin
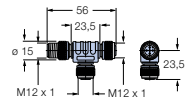	**FSM-2FKM57** 6622101	CANopen/DeviceNet™ / Power supply T piece, 1 x M12 male, 2 x M12 female, 5-pin
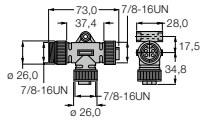	**RSM-2RKM57-DGT** 6602482	CANopen/DeviceNet™ / Power supply T piece, 1 x 7/8“ male, 2 x 7/8“ female, 5-pin, incl. closure cap for unused outlet used e.g. as diagnostic interface
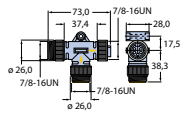	**RSM-RKM57-WSM40-PST** 6602376	CANopen/DeviceNet™ T piece, 1 x 7/8“ male, 1 x 7/8“ female, 5-pin, 1 x 7/8“ male, 4-pin for power supply, 9 A nominal current
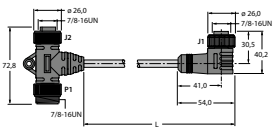	**RSM52-WKM52-0.5-RKM50** 6914160	CANopen/DeviceNet™ / Power supply T piece, 1 x 7/8“ male, 2 x 7/8“ female, 5-pin, 0.5 m cable, 9 A nominal current
	RSM50-WKM50-0.3XOR-RKM50 6914951	CANopen/DeviceNet™ / Power supply T piece, 1 x 7/8“ male, 2 x 7/8“ female, 5-pin, 0.3 m cable, irradiated, 9 A nominal current
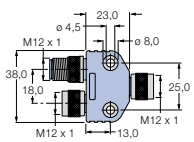	**VB2-FKM-FKM-FSM57** 6602331	CANopen/DeviceNet™ / Power supply Y piece, 1 x M12 male, 2 x M12 female, 5-pin

DeviceNet™/CANopen – Accessories

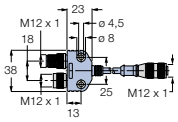

VB2-RKC572-1M-FKM-FSM
6996011

CANopen/DeviceNet™ / Power supply Y piece,
1 x M12 male, 2 x M12 female, 5-pin, 1 m cable

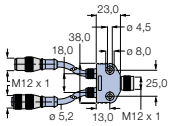

VB2-FKM-RKC-RSC572-0,5M-0,5M
6602490

CANopen/DeviceNet™ / Power supply Y piece,
1 x M12 male, 2 x M12 female, 5-pin, 2 x 0.5 m cable

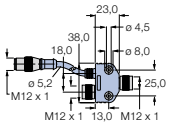

VB2-FKM-FKM-RSC572-1M
6602613

CANopen/DeviceNet™ / Power supply Y piece,
1 x M12 male, 2 x M12 female, 5-pin, 1 x 1 m cable

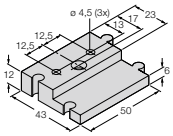

S89/VB2-Befestigungsset
8036078

Assembly kit for PROFIBUS-DP, CANopen/
DeviceNet, power supply Y piece

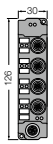

JBBS-57-E411
6603378

CANopen/DeviceNet™ junction box, 4-port ,
1 x M12 male, 4 x M12 female, 5-pin, passive, IP67



JBBS-57-E811-VM
6602068

CANopen/DeviceNet™ junction box, 8-port, 1 x 7/8“ male, 1 x 7/8“ female, 8 x M12 female, 5-pin, passive, voltage monitoring, IP67

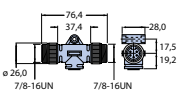

RSM-RSM57
6603371

CANopen/DeviceNet™ / Power supply adapter,
2 x 7/8“ male, 5-pin, 9 A nominal current

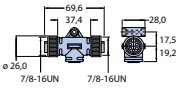	**RKM-RKM57** 6603372	CANopen/DeviceNet™ / Power supply adapter, 2 x 7/8“ female, 5-pin, 9 A nominal current
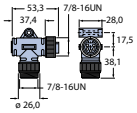	**WSM-RKM57** 6603370	CANopen/DeviceNet™ / Power supply 90° adapter, 1 x 7/8“ male, angled, 1 x 7/8“ female, straight, 5-pin, 9 A nominal current
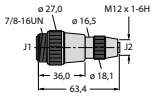	**RSM57-FK4.5** 6603454	CANopen/DeviceNet™ / Power supply adapter, 1 x 7/8“ male, 1 x M12 female 5-pin, 4 A nominal current
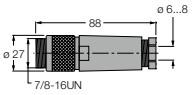	**BS4151-0/9** 6904718	CANopen/DeviceNet™ / Power supply field-wireable 1 x 7/8“ male, 5-pin, straight, clamping width 6…8 mm, 9 A nominal current
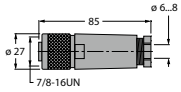	**B4151-0/9** 6904717	CANopen/DeviceNet™ / Power supply field-wireable 1 x 7/8“ female, 5-pin, straight, clamping width 6…8 mm, 9 A nominal current
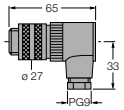	**BS4251-0/9** 6901112	CANopen/DeviceNet™ / Power supply field-wireable 1 x 7/8“ male, 5-pin, angled, clamping width 6…8 mm, 9 A nominal current
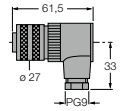	**B4251-0/9** 6901113	CANopen/DeviceNet™ / Power supply field-wireable 1 x 7/8“ female, 5-pin, angled, hole diameter 8 mm, 9 A nominal current

DeviceNet™/CANopen – Accessories

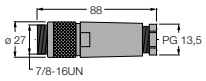

BS4151-0/13.5
6904716

CANopen/DeviceNet™ / Power supply, field-wireable 7/8“ male, 5-pin, straight, PG13.5 screw-in thread, 9 A nominal current

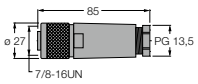

B4151-0/13.5
6904715

CANopen/DeviceNet™ / Power supply field-wireable 7/8“ female, 5-pin, straight, PG13.5 screw-in thread, 9 A nominal current

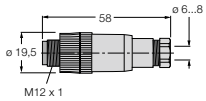

BS8151-0/9
6904613

CANopen/DeviceNet™ / Power supply field-wireable 1 x M12 male, 5-pin, straight, clamping width 6…8 mm, 4 A nominal current

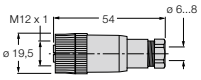

B8151-0/9
6904604

CANopen/DeviceNet™ / Power supply field-wireable 7/8“ female, 5-pin, straight, clamping width 6…8 mm, 4 A nominal current

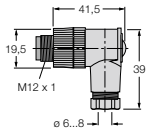

BS8251-0/9
6904615

CANopen/DeviceNet™ / Power supply field-wireable 1 x M12 male, 5-pin, angled, clamping width 6…8 mm, 4 A nominal current

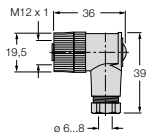

B8251-0/9
6904603

CANopen/DeviceNet™ / Power supply field-wireable 1 x M12 female, 5-pin, angled, clamping width 6…8 mm, 4 A nominal current

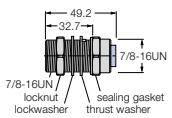

RSF-RKF-57/22
6602218

CANopen/DeviceNet™ / Power supply wall bushing 1 x 7/8“ male/female, 5-pin, hole diameter 22.5 mm, 9 A nominal current

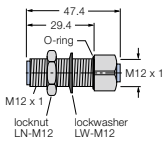	**FKM-FS57-M12** 6602223	CANopen/DeviceNet™ / Power supply wall bushing, 1 x M12 male/female, 5-pin, hole diameter 12.7 mm
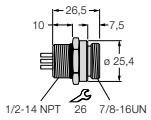	**RSF57** 6602342	CANopen/DeviceNet™ / Power supply flange, 1 x 7/8“ male, 5-pin, front-panel mounting (1/2-14 NPT) solder tails, 9 A nominal current
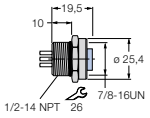	**RKF57** 6602217	CANopen/DeviceNet™ / Power supply flange, 1 x 7/8“ female, 5-pin, front-panel mounting (1/2-14 NPT) solder tails, 9 A nominal current
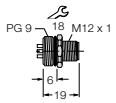	**FS57** 6602314	CANopen/DeviceNet™ / Power supply flange, 1 x M12 male, 5-pin, front-panel mounting (PG9) solder tails, 4 A nominal current
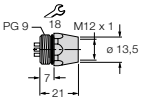	**FK57** 6602216	CANopen/DeviceNet™ / Power supply flange, 1 x M12 female, 5-pin, front-panel mounting (PG9) solder tails, 4 A nominal current
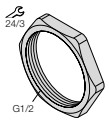	**LOCKNUT G1/2“** 6900493	1/2“ counter nut, for G thread, 100 pcs.
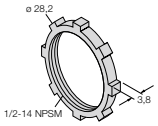	**LN1/2-14NPT/10** 6961002	1/2“ counter nut, for NPT thread, 10 pcs.

Ethernet – Accessories

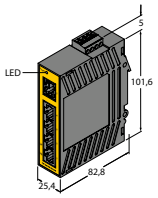	**SE20-84X-RJ522** 6607005	Ethernet switch, 5-port, unmanaged, 10/100 Mbps, RJ45, IP20, mounting on standard DIN rail TS-35
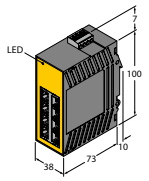	**SE20-84XT-RJ822** 6607012	Ethernet switch, 8-port, unmanaged, 10/100 Mbps, RJ45, IP20, mounting on standard DIN rail TS-35
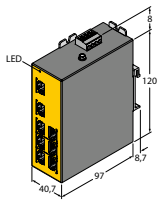	**SE20-84MT-RJ822** 6607011	Ethernet switch, 8-port, managed, 10/100 Mbps, RJ45, IP20, mounting on standard DIN rail TS-35
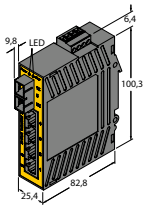	**SE20-84XT-RJ422-FO** 6607006	Ethernet switch, 5-port, unmanaged, 10/100 Mbps, 4 x RJ45 port, 1 x SC-Duplex port, IP20, mounting on standard DIN rail TS-35
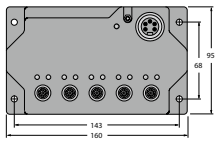	**SE-44X-E524** 6607003	Ethernet switch, 5-port, unmanaged, 10/100 Mbps, M12 female, 4-pin, D-coded, IP67
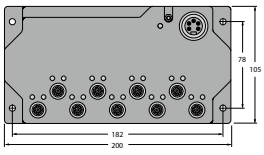	**SE-44X-E924** 6607002	Ethernet switch, 9-port, unmanaged, 10/100 Mbps, M12 female, 4-pin, D-coded, IP67
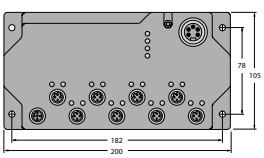	**SE-44M-E924** 6607004	Ethernet switch, 9-port, managed, 10/100 Mbps, M12 female, 4-pin, D-coded, IP67

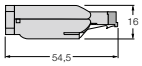	**6GK1901-1BB10-2AA0/FC-RJ45** 6780031	Ethernet field-wireable RJ45 male, straight, metal housing, shieldable
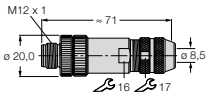	**FW-M12ST5D-G-SB-ME-SH-8** 6604218	Ethernet field-wireable 1 x M12 male, 4-pin, D-coded, straight, metal housing, shieldable
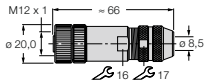	**FW-M12KU5D-G-SB-ME-SH-8** 6604219	Ethernet field-wireable 1 x M12 female, 4-pin, D-coded, straight, metal housing, shieldable
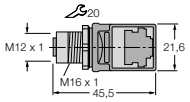	**FKSDD-RJ45SF-44** 6611523	Ethernet wall bushing, rear-panel mounting, 1 x RJ45 female, 1 x M12 female, 4-pin, D-coded
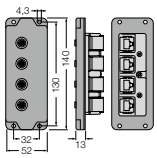	**BIC-44-E424** 6604407	Ethernet wall bushing, front-panel mounting, 4-port, RJ45 female, M12 female, 4-pin, D-coded
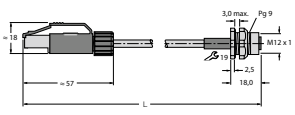	**RJ45-FKSDD-441-0,5M/S2174** 6914221	Ethernet flange, 1 x RJ45 male, 1 x M12 female, 4-pin, D-coded, rear-panel mounting (PG9)

Power Supply – Accessories

	**Power supplies in IP20**	Power supply units in IP20, see chapter Interface Technology
	**PSU67-11-2420/M** 6884140	Power supply unit in IP67, 24 VDC, 2 A output current
	PSU67-11-2440/M 6884141	Power supply unit in IP67, 24 VDC, 4 A output current
	**PSU67-11-2480/M** 6884147	Power supply unit in IP67, 24 VDC, 8 A output current
	**PSU67-12-2480/M** 6884148	Power supply unit in IP67, 24 VDC, 2 x 4 A output current
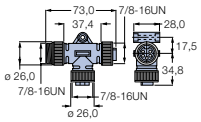	**RSM-2RKM57** 6602007	CANopen/DeviceNet™ / Power supply T piece, 1 x 7/8“ male, 2 x 7/8“ female, 5-pin, 0° / 0° / 0°, 9 A nominal current
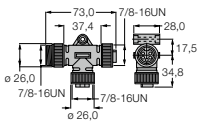	**RSM-2RKM50** 6914950	CANopen/DeviceNet™ / Power supply T piece, 1 x 7/8“ male, 2 x 7/8“ female, 5-pin, 0° / 180° / 0°, 9 A nominal current
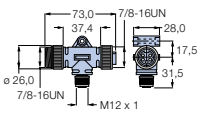	**RSM-FKM-RKM57** 6602392	CANopen/DeviceNet™ / Power supply T piece, 1 x 7/8“ male, 1 x M12 female , 1 x 7/8“ female, 5-pin

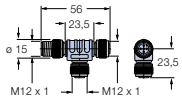	**FSM-2FKM57** 6622101	CANopen/DeviceNet™ / Power supply T piece, 1 x M12 male, 2 x M12 female, 5-pin
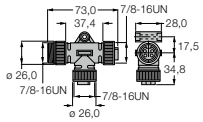	**RSM-2RKM57-DGT** 6602482	CANopen/DeviceNet™ / Power supply T piece, 1 x 7/8“ male, 2 x 7/8“ female, 5-pin, incl. closure cap for unused outlet used e.g. as diagnostic interface
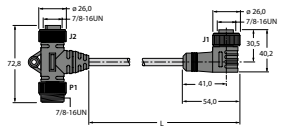	**RSM52-WKM52-0.5-RKM50** 6914160	CANopen/DeviceNet™ / Power supply T piece, 1 x 7/8“ male, 2 x 7/8“ female, 5-pin, 0.5 m cable, 9 A nominal current
	RSM50-WKM50-0.3XOR-RKM50 6914951	CANopen/DeviceNet™ / Power supply T piece, 1 x 7/8“ male, 2 x 7/8“ female, 5-pin, 0.3 m cable, irradiated, 9 A nominal current
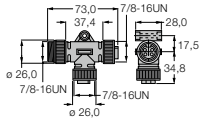	**RSM-2RKM40** 6914828	Power supply T piece, 1 x 7/8“ male, 2 x 7/8“ female, 4-pin, 0° / 0° / 0°, 9 A nominal current
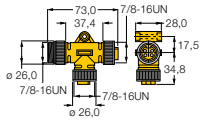	**RKM40-RKM40-L-RSM40** 6914866	Power supply T piece, 1 x 7/8“ male, 2 x 7/8“ female, 4-pin, 90° / 270° / 270°, 9 A nominal current
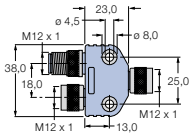	**VB2-FKM-FKM-FSM57** 6602331	CANopen/DeviceNet™ / Power supply Y piece, 1 x M12 male, 2 x M12 female, 5-pin
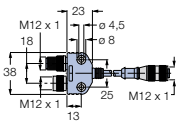	**VB2-RKC572-1M-FKM-FSM** 6996011	CANopen/DeviceNet™ / Power supply Y piece, 1 x M12 male, 2 x M12 female, 5-pin, 1 m cable

Power Supply – Accessories

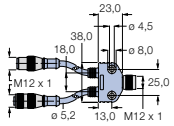

VB2-FKM-RKC-RSC572-0.5M-0.5M
6602490

CANopen/DeviceNet™ / Power supply Y piece, 1 x M12 male, 2 x M12 female, 5-pin, 1 m cable

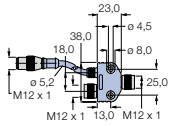

VB2-FKM-FKM-RSC572-1M
6602613

CANopen/DeviceNet™ / Power supply Y piece, 1 x M12 male, 2 x M12 female, 5-pin, 1 m cable

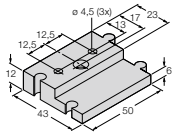

S89/VB2-Befestigungsset
8036078

Assembly kit for PROFIBUS-DP, CANopen/ DeviceNet™, power supply Y piece

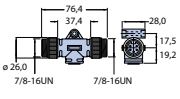

RSM-RSM57
6603371

CANopen/DeviceNet™ / Power supply adapter, 2 x 7/8“ male, 5-pin, 9 A nominal current

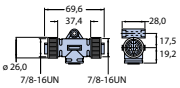

RKM-RKM57
6603372

CANopen/DeviceNet™ / Power supply adapter, 2 x 7/8“ female, 5-pin, 9 A nominal current

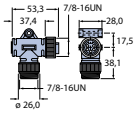

WSM-RKM57
6603370

CANopen/DeviceNet™ / Power supply 90° adapter, 1 x 7/8“ male, angled, 1 x 7/8“ female, straight, 5-pin, 9 A nominal current

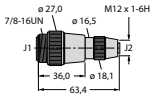

RSM57-FK4.5
6603454

CANopen/DeviceNet™ / Power supply adapter, 1 x 7/8“ male, 1 x M12 female 5-pin, 4 A nominal current

Hans Turck GmbH & Co. KG ▪ Tel. +49 208 49 52-0 ▪ Fax +49 208 49 52-264

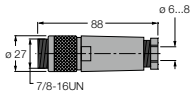	**BS4151-0/9** 6904718	CANopen/DeviceNet™ / Power supply field-wireable 7/8“ male, 5-pin, straight, clamping width 6…8 mm, 9 A nominal current
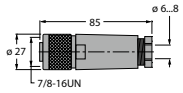	**B4151-0/9** 6904717	CANopen/DeviceNet™ / Power supply field-wireable 7/8“ female, 5-pin, straight, clamping width 6…8 mm, 9 A nominal current
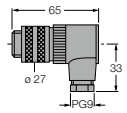	**BS4251-0/9** 6901112	CANopen/DeviceNet™ / Power supply field-wireable 7/8“ male, 5-pin, angled, clamping width 6…8 mm, 9 A nominal current
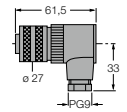	**B4251-0/9** 6901113	CANopen/DeviceNet™ / Power supply field-wireable 7/8“ female, 5-pin, angled, clamping width 6…8 mm, 9 A nominal current
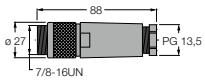	**BS4151-0/13.5** 6904716	CANopen/DeviceNet™ / Power supply, field-wireable 7/8“ male, 5-pin, straight, PG13.5 screw-in thread, 9 A nominal current
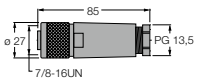	**B4151-0/13.5** 6904715	CANopen/DeviceNet™ / Power supply field-wireable 7/8“ female, 5-pin, straight, PG13.5 screw-in thread, 9 A nominal current
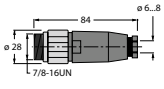	**BS4140-0/9** 6914550	Power supply field-wireable 7/8“ male, 4-pin, straight, clamping width 6…8 mm, 9 A nominal current

Power Supply – Accessories

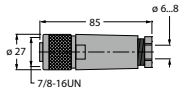	**BK4140-0/9** 6914551	Power supply field-wireable 1 x 7/8“ female, 4-pin, straight, clamping width 6…8 mm, 9 A nominal current
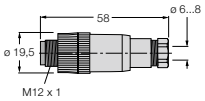	**BS8151-0/9** 6904613	CANopen/DeviceNet™ / Power supply field-wireable 1 x M12 male, 5-pin, straight, clamping width 6…8 mm, 4 A nominal current
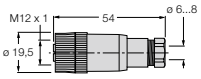	**B8151-0/9** 6904604	CANopen/DeviceNet™ / Power supply field-wireable M12 female, 5-pin, straight, clamping width 6…8 mm, 4 A nominal current
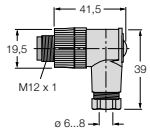	**BS8251-0/9** 6904615	CANopen/DeviceNet™ / Power supply field-wireable 1 x M12 male, 5-pin, angled, clamping width 6…8 mm, 4 A nominal current
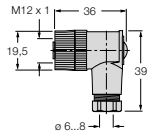	**B8251-0/9** 6904603	CANopen/DeviceNet™ / Power supply field-wireable 1 x M12 female, 5-pin, angled, clamping width 6…8 mm, 4 A nominal current
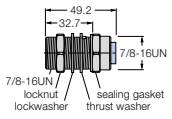	**RSF-RKF-57/22** 6602218	CANopen/DeviceNet™ / Power supply wall bushing 1 x 7/8“ male/female, 5-pin, hole diameter 22.5 mm, 9 A nominal current
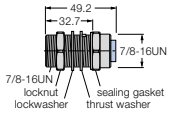	**RSF-RKF-40/22** 6915014	Power supply wall bushing, 1 x 7/8“ male/female, 4-pin, hole diameter 22.5 mm, 9 A nominal current

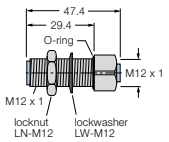

FKM-FS57-M12
6602223

CANopen/DeviceNet™ / Power supply wall bushing, 1 x M12 male/female, 5-polig, hole diameter 12.7 mm

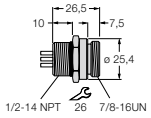

RSF57
6602342

CANopen/DeviceNet™ / Power supply flange, 1 x 7/8“ male, 5-pin, front-panel mounting (1/2-14 NPT) solder tails, 9 A nominal current

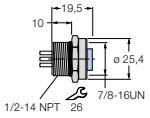

RKF57
6602217

CANopen/DeviceNet™ / Power supply flange, 1 x 7/8“ female, 5-pin, front-panel mounting (1/2-14 NPT) solder tails, 9 A nominal current

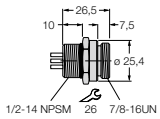

RSFL46
6914836

Power supply flange, 1 x 7/8“ male, 4-pin, front-panel mounting (1/2-14, NPSM) solder tails, 9 A nominal current

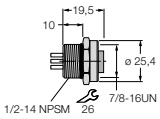

RKFL46
6915086

Power supply flange, 1 x 7/8“ female, 4-pin, front-panel mounting (1/2-14 NPSM) solder tails, 9 A nominal current

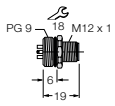

FS57
6602314

CANopen/DeviceNet™ / Power supply flange, 1 x M12 male, 5-pin, front-panel mounting (PG9) solder tails, 4 A nominal current

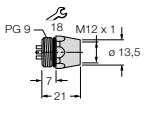

FK57
6602216

CANopen/DeviceNet™ / Power supply flange, M12 female, 5-pin, front-panel mounting (PG9) solder tails, 4 A nominal current

Power Supply – Accessories

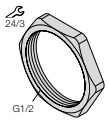	**LOCKNUT G1/2“** 6900493	1/2“ counter nut, for G thread, 100 pcs.
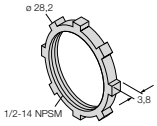	**LN1/2-14NPT/10** 6961002	1/2“ counter nut, for NPT thread, 10 pcs.

Further accessories available on request or at www.turck.com

Compact block I/O modules in IP20



Compact block I/O modules in IP20

The compact IP20 block I/O modules for DIN rails can not only be installed in control cabinets, they can also be used to integrate small, decentralized control boxes with a few I/O-signals to a fieldbus network. Block I/O modules are available for the fieldbus systems PROFIBUS-DP and DeviceNet ™ as well as modules with multiprotocol Ethernet functionality that can be automatically run in each of the three Ethernet systems PROFINET, EtherNet/IP™ and Modbus TCP. The devices are available in two different designs: The small design provides 4 digital inputs and 4 universal digital channels; the large design is available in versions with 16 digital inputs or with 16 universal digital I/Os that can be used both as input and as output. The modules can be fitted directly to a standard TS 35 DIN rail.

modules in IP20

Type	Ident No.	Description	Page
FDP20-16S	6611465	PROFIBUS-DP slave, 16 digital inputs, 24 VDC, PNP, SUB-D	156
FDP20-16S-T	6611485	PROFIBUS-DP slave, 16 digital inputs, 24 VDC, PNP, screw-clamp terminal block	158
FDP20-16XSG	6611466	PROFIBUS-DP slave, 16 universal digital channels, 24 VDC, PNP, SUB-D	160
FDP20-16XSG-T	6611486	PROFIBUS-DP slave, 16 universal digital channels, 24 VDC, PNP, screw-clamp terminal block	162
FDN20-4S-4XSG	6611359	DeviceNet™ slave, 4 digital inputs, 4 universal digital channels, 24 VDC, PNP	164
FDN20-4S-4XSG-E	6611343	DeviceNet™ slave, 4 digital inputs, 4 universal digital channels, 24 VDC, PNP, rear M12 connector	166
FDN20-16S	6611312	DeviceNet™ slave, 16 digital inputs, 24 VDC, PNP	168
FDN20-16XSG	6611373	DeviceNet™ slave, 16 universal digital channels, 24 VDC, PNP	170
FEN20-4DIP-4DXP	6931090	Multiprotocol Ethernet slave, 4 digital inputs, 4 universal digital channels, 24 VDC, PNP	172
FEN20-16DXP	6931089	Multiprotocol Ethernet slave, 16 universal digital channels, 24 VDC, PNP	174

Our Strengths – Your Advantages

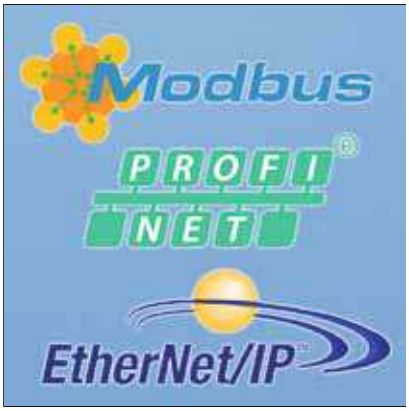

IP20 block I/O modules with multiprotocol Ethernet

The compact Ethernet multiprotocol modules of the FEN20 series can be operated in any of the three Ethernet systems PROFINET, EtherNet/IP™ and Modbus TCP. Two IP20 rated designs are available: The small FEN20-4DIP-4DXP design comes with four digital input channels and four universal digital channels. The module has two drill holes for easy mounting on a mounting plate. The FDN20-BKT-DIN mounting adapter also enables the device to be fitted to a standard TS 35 DIN rail. The larger variant FEN20-16DXP comes with 16 universal digital channels. The I/O signals of these modules are distributed over three independent potential groups that are isolated from each other. This makes it possible, for example, to implement the safety-related off switching of the outputs. The modules can be fitted directly to a standard DIN rail.



IP20 block I/O modules for PROFIBUS-DP

The FDP20 product series offers compact block I/O modules in IP20 for PROFIBUS-DP. Four device types are available – two modules with 16 digital inputs as well as two modules with 16 universal digital channels. The modules are available either with SUB-D connectors or a removable screw terminal block, so that the SUB-D male connector is unnecessary. The I/O signals of these modules are distributed over three independent potential groups that are isolated from each other. This makes it possible, for example, to implement the safety-related off switching of the outputs. The modules can be fitted directly to a standard DIN rail.



IP20 block I/O modules for DeviceNet™

The FDN20 product series offers a selection of compact block I/O modules in IP20 for DeviceNet™. Two modules come with four digital inputs and four universal digital channels. Both modules are provided with a screw terminal block for the bus connection; the rear of a module is also provided with an M12 × 1 male connector which can be routed directly outside of the control cabinet wall. The two modules are either mounted on a mounting plate using two drill holes provided, directly on the control cabinet wall, or on a standard TS 35 DIN rail using the FDN20-BKT-DIN mounting adapter. Each module is also provided with 16 digital inputs and 16 universal digital channels for mounting on a standard TS 35 DIN rail. The I/O signals of these modules are distributed over three independent potential groups that are isolated from each other. This makes it possible, for example, to implement the safety-related off switching of the outputs.

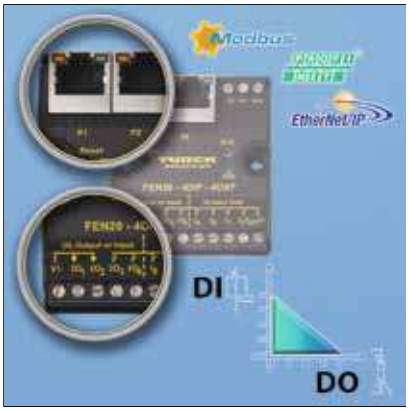

Multiprotocol technology and universal digital channels

Thanks to the TURCK multiprotocol technology, the FEN20 block IO modules can be used in any of the three Ethernet systems PROFINET, EtherNet/IP™ and Modbus TCP. The modules detect the bus protocol used automatically during the startup phase. This makes it possible to considerably reduce the number of device variants required and operate a machine on different controller systems without any additional effort required for configuration or module selection. The user can configure the universal channels either as digital inputs or outputs and thus use the modules flexibly as required. Free channels can be used flexibly later as inputs or outputs.



Ultra-compact design also for the smallest control box

Thanks to their ultra-compact design, the I/O modules of the Fxx20 series can be fitted in virtually any control cabinet. This makes it possible to easily provide bus capability to small local stations or operator panels, and to utilize the benefits of fieldbus technology quickly and effectively as an alternative to conventional cabling, even when only a few I/O signals are involved. The 8-channel version is only 62.5 × 55 × 28.5 mm!
The program also includes a module that is provided with an M12 × 1 male connector on the back. If the device is fitted on the control cabinet wall, the user can simply route the bus terminal out of the control cabinet.



Integrated web server for simple commissioning and diagnostics

The Ethernet multiprotocol I/O modules of the FEN20 series are provided with an integrated web server, thus simplifying commissioning and diagnostics. This enables the user to view the station information, such as module type or firmware version, independently of the controller. Data for the network configuration, such as the IP address or the PROFINET name, can also be viewed and modified. Furthermore, additional information such as the station configuration, channel settings and Ethernet statistics are provided. Diagnostic information such as the short circuit of an output are shown on the web server clearly in plain text. An integrated ring buffer also enables the viewing of a diagnostics history. A link enables the user to access the current data sheet of the respective module quickly and simply.

Type code

Type code Fxx20

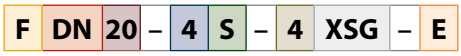

F Product series – **DN** Bus system **20** Protection class

Product series
F compact I/O fieldbus module

Bus system
DN DeviceNet™
DP PROFIBUS-DP
EN Multiprotocol Ethernet
– PROFINET
– EtherNet/IP™
– Modbus TCP

Protection class
20 IP20

4 Channels **S** Signal type – **4** Channels

Numbers of channels
4 4 channels
16 16 channels

Signal type
DIP digital input channels
DXP universal input channels
S digital input channels
XSG universal input channels

Number of channels
4 4 channels

XSG Signal type **E** Connection type

Signal type
DXP universal digital channels
XSG universal digital channels

Connection type
E rear M12 connector for the DeviceNet™ connection
T 5-pole removable screw terminals for the PROFIBUS-DP connection

16 digital inputs, 24 VDC, PNP

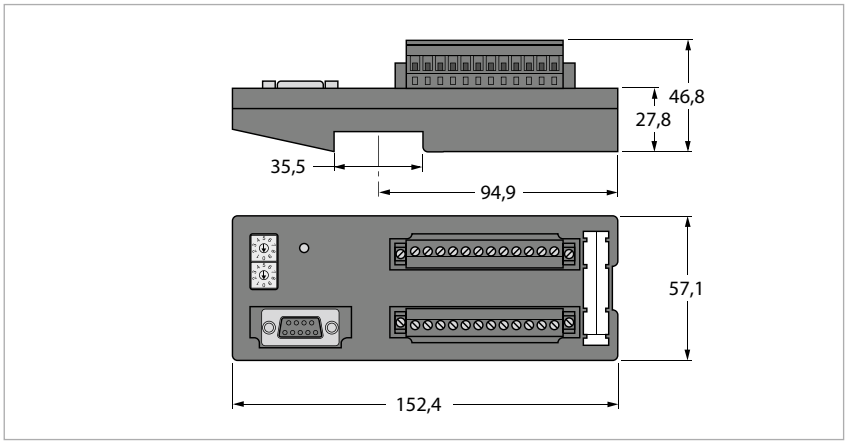

Features

- PROFIBUS-DP slave
- 9-pin SUB-D female, for PROFIBUS fieldbus connection
- Rotary coding switch for setting the PROFIBUS address
- 3 I/O power supply groups each galvanically separated
- 16 digital inputs
- 24 VDC, PNP
- Protection class IP20

Pinning overview

Position	Notice	Pinning assignment
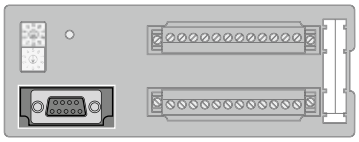	**PROFIBUS-DP** Fieldbus cable (example): D9T451-2M (ident no. 6915759) or RSSW-D9T451-2M (ident no. 6915779)	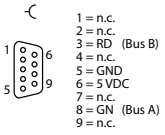
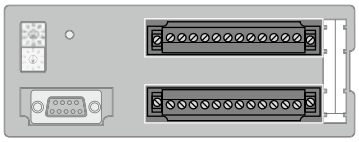	**Power supply and I/O channels** AUX1: Supply of the internal module electronics and the I/O channels 0 to 7 AUX2: Supply of the I/O channels 8 to 13 AUX3: Supply of the I/O channels 14 to 15 Via the terminals V+ and V- more devices can be fed with 24 VDC up to 0.7 A.	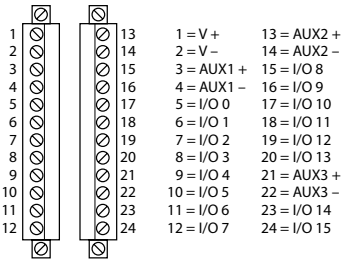

Technical data

Type	FDP20-16S
Ident no.	6611465
Power supply	
Supply voltage	24 VDC
Operating voltage range	18…30 VDC
Galvanic separation	500 V I/Os to PROFIBUS
Number of channels	16
Power loss, typical	≤ 1.8 W
Voltage supply connection	pluggable screw terminal
System data	
Fieldbus transmission rate	9.6 kbps … 12 Mbps
Fieldbus addressing	2 decimally coded rotary switches
Fieldbus address range	1…99
Fieldbus connection technology	1 x female sub-D connector
Inputs	
Number of channels	16
Input voltage	18…30 VDC
Input type	PNP
Type of input diagnostics	common diagnostics
Low level signal voltage	< 4 V
High level signal voltage	8…24 V
Low level signal current	< 0.5 mA
High level signal current	1…3.4 mA
Input delay	2.5 ms
Max. input current	total: 700 mA
Environmental Conditions	
Ambient temperature	-40…+55 °C
MTTF	255 years acc. to SN 29500 (Ed. 99) 20 °C
Mechanical data	
Mounting instruction	for DIN rail
Protection class	IP20
Dimensions	57.1 x 152.2 x 46.8 mm
Approval | Certification	ATEX, IECEx, $_{c}$UL$_{us}$, $_{c}$FM$_{us}$, $_{c}$CSA$_{us}$

16 digital inputs, 24 VDC, PNP

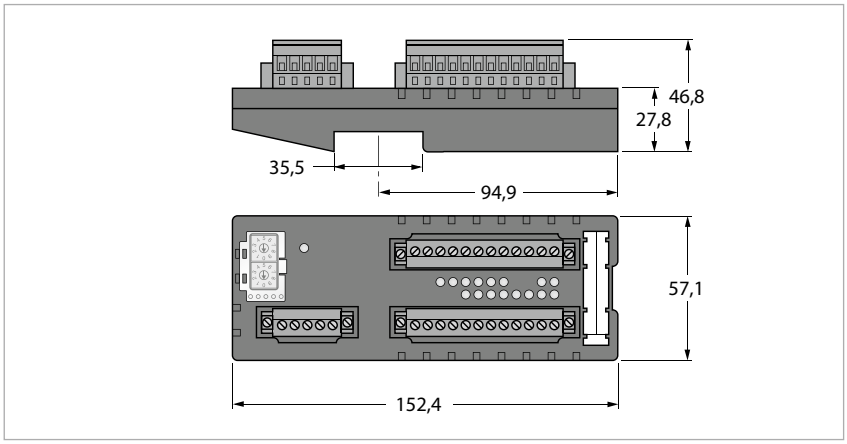

Features

- PROFIBUS-DP slave
- Removable 5-pin screw-clamp terminal block, for PROFIBUS fieldbus connection
- Rotary coding switch for setting the PROFIBUS address
- 3 I/O power supply groups each galvanically separated
- 16 digital inputs
- 24 VDC, PNP
- Protection class IP20

Pinning overview

Position	Notice	Pinning assignment
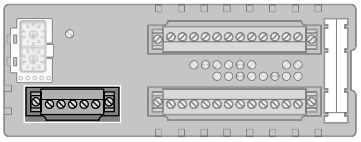	**PROFIBUS-DP** Fieldbus cable (example): D9T451-2M (ident no. 6915759) or RSSW-451-2M (ident no. 6914229)	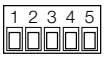 1 = 5 VDC 2 = GN (Bus A) 3 = Shield 4 = RD (Bus B) 5 = GND
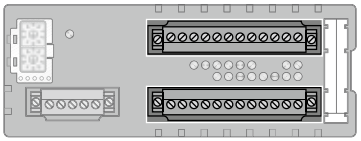	**Power supply and I/O channels** AUX1: Supply of the internal module electronics and the I/O channels 0 to 7 AUX2: Supply of the I/O channels 8 to 13 AUX3: Supply of the I/O channels 14 to 15 Via the terminals V+ and V- more devices can be fed with 24 VDC up to 0.7 A.	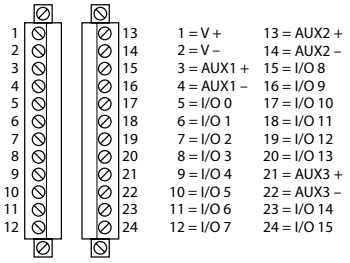

Technical data

Type	FDP20-16S-T
Ident no.	6611485
Power supply	
Supply voltage	24 VDC
Operating voltage range	18…30 VDC
Galvanic separation	500 V I/Os to PROFIBUS
Number of channels	16
Power loss, typical	≤ 1.8 W
Voltage supply connection	pluggable screw terminal
System data	
Fieldbus transmission rate	9.6 kbps … 12 Mbps
Fieldbus addressing	2 decimally coded rotary switches
Fieldbus address range	1…99
Fieldbus connection technology	pluggable screw terminal
Inputs	
Number of channels	16
Input voltage	18…30 VDC
Input type	PNP
Type of input diagnostics	common diagnostics
Low level signal voltage	< 4 V
High level signal voltage	8…24 V
Low level signal current	< 0.5 mA
High level signal current	1…3.4 mA
Input delay	2.5 ms
Max. input current	total: 700 mA
Environmental Conditions	
Ambient temperature	-40…+55 °C
Mechanical data	
Mounting instruction	for DIN rail
Protection class	IP20
Dimensions	57.1 x 152.2 x 46.8 mm
Approval | Certification	ATEX, IECEx, $_{c}UL_{us}$, $_{c}FM_{us}$, $_{c}CSA_{us}$

16 universal digital channels, 24 VDC, PNP

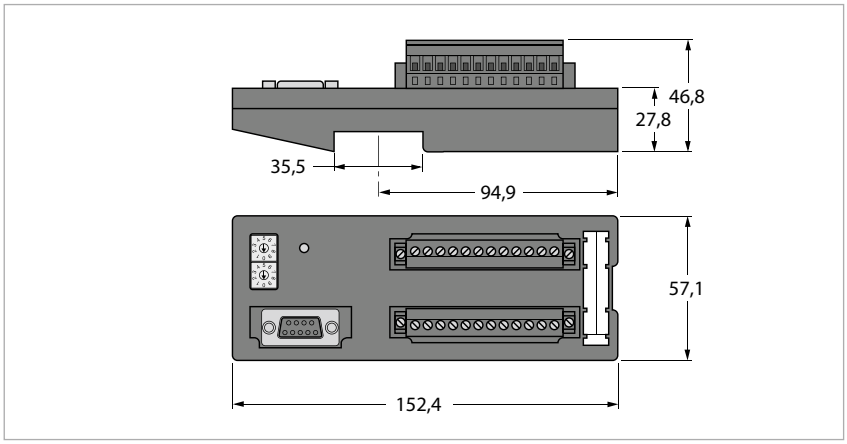

Features

- PROFIBUS-DP slave
- 9-pin SUB-D female, for PROFIBUS fieldbus connection
- Rotary coding switch for setting the PROFIBUS address
- 3 I/O power supply groups each galvanically separated
- 16 universal digital channels, DI / DO
- 24 VDC, PNP
- output current: 0.5 A
- Protection class IP20

Pinning overview

Position	Notice	Pinning assignment
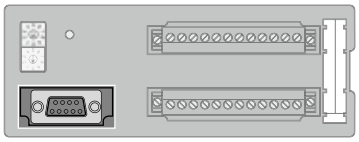	**PROFIBUS-DP** Fieldbus cable (example): D9T451-2M (ident no. 6915759) or RSSW-D9T451-2M (ident no. 6915779)	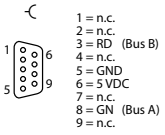
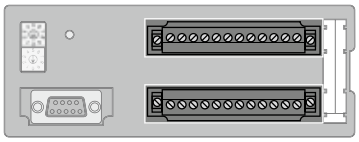	**Power supply and I/O channels** AUX1: Supply of the internal module electronics and the I/O channels 0 to 7 AUX2: Supply of the I/O channels 8 to 13 AUX3: Supply of the I/O channels 14 to 15 Via the terminals V+ and V- more devices can be fed with 24 VDC up to 0.7 A.	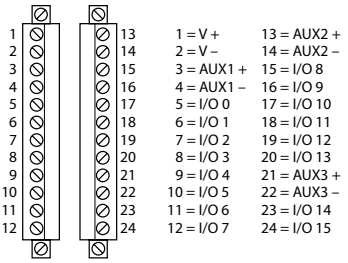

Technical data

Type	FDP20-16XSG
Ident no.	6611466
Power supply	
Supply voltage	24 VDC
Operating voltage range	18…30 VDC
Galvanic separation	500 V I/Os to PROFIBUS
Number of channels	16
Power loss, typical	≤ 1.8 W
Voltage supply connection	pluggable screw terminal
System data	
Fieldbus transmission rate	9.6 kbps … 12 Mbps
Fieldbus addressing	2 decimally coded rotary switches
Fieldbus address range	1…99
Fieldbus connection technology	1 x female sub-D connector
Inputs	
Number of channels	16
Input voltage	18…30 VDC
Input type	PNP
Type of input diagnostics	common diagnostics
Low level signal voltage	< 4 V
High level signal voltage	8…24 V
Low level signal current	< 0.5 mA
High level signal current	1…3.4 mA
Input delay	2.5 ms
Max. input current	total: 700 mA
Outputs	
Number of channels	16
Switching frequency	≤ 100 Hz
Output voltage	18…30 VDC
Output current per channel	0.5A (from Aux)
Output type	PNP
Short-circuit protection	yes
Environmental Conditions	
Ambient temperature	-40…+55 °C
MTTF	170 years acc. to SN 29500 (Ed. 99) 20 °C
Mechanical data	
Mounting instruction	for DIN rail
Protection class	IP20
Dimensions	57.1 x 152.2 x 46.8 mm
Approval | Certification	ATEX, IECEx, $_{c}UL_{us}$, $_{c}FM_{us}$, $_{c}CSA_{us}$

16 universal digital channels, 24 VDC, PNP

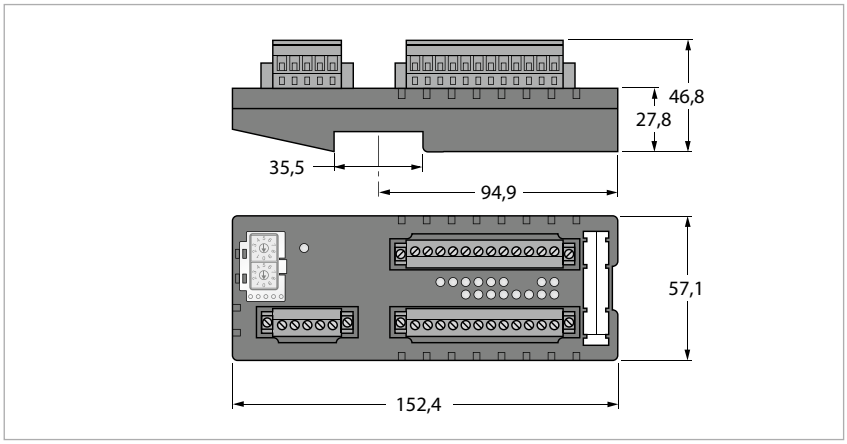

Features

- PROFIBUS-DP slave
- Removable 5-pin screw-clamp terminal block, for PROFIBUS fieldbus connection
- Rotary coding switch for setting the PROFIBUS address
- 3 I/O power supply groups each galvanically separated
- 16 universal digital channels, DI / DO
- 24 VDC, PNP
- output current: 0.5 A
- Protection class IP20

Pinning overview

Position	Notice	Pinning assignment
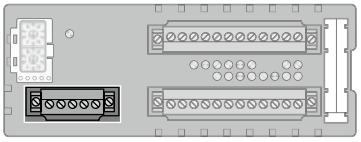	**PROFIBUS-DP** Fieldbus cable (example): D9T451-2M (ident no. 6915759) or RSSW-451-2M (ident no. 6914229)	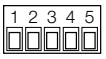 1 = 5 VDC 2 = GN (Bus A) 3 = Shield 4 = RD (Bus B) 5 = GND
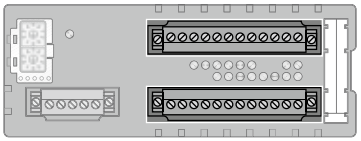	**Power supply and I/O channels** AUX1: Supply of the internal module electronics and the I/O channels 0 to 7 AUX2: Supply of the I/O channels 8 to 13 AUX3: Supply of the I/O channels 14 to 15 Via the terminals V+ and V- more devices can be fed with 24 VDC up to 0.7 A.	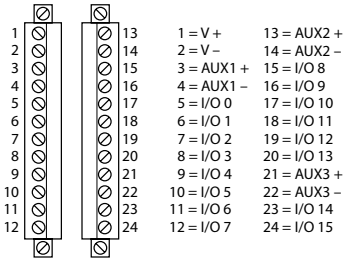

Technical data

Type	FDP20-16XSG-T
Ident no.	6611486
Power supply	
Supply voltage	24 VDC
Operating voltage range	18…30 VDC
Galvanic separation	500 V I/Os to PROFIBUS
Number of channels	16
Power loss, typical	≤ 1.8 W
Voltage supply connection	pluggable screw terminal
System data	
Fieldbus transmission rate	9.6 kbps … 12 Mbps
Fieldbus addressing	2 decimally coded rotary switches
Fieldbus address range	1…99
Fieldbus connection technology	pluggable screw terminal
Inputs	
Number of channels	16
Input voltage	18…30 VDC
Input type	PNP
Type of input diagnostics	common diagnostics
Low level signal voltage	< 4 V
High level signal voltage	8…24 V
Low level signal current	< 0.5 mA
High level signal current	1…3.4 mA
Input delay	2.5 ms
Max. input current	total: 700 mA
Outputs	
Number of channels	16
Switching frequency	≤ 100 Hz
Output voltage	18…30 VDC
Output current per channel	0.5A (from Aux)
Output type	PNP
Short-circuit protection	yes
Environmental Conditions	
Ambient temperature	-40…+55 °C
Mechanical data	
Mounting instruction	for DIN rail
Protection class	IP20
Dimensions	57.1 x 152.2 x 46.8 mm
Approval | Certification	ATEX, IECEx, $_{c}UL_{us}$, $_{c}FM_{us}$, $_{c}CSA_{us}$

4 digital inputs, 4 universal digital channels, 24 VDC, PNP

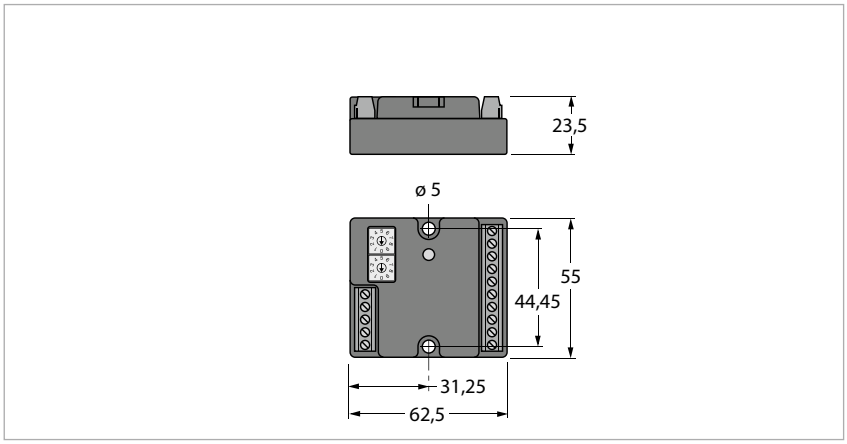

Features

- DeviceNet™ slave
- Screw-clamp terminal block, 5-pin, for DeviceNet™ fieldbus connection
- Rotary coding switch for setting the DeviceNet™ address
- 4 digital Inputs
- 4 universal digital channels, DI / DO
- 24 VDC, PNP
- Output current 0.5 A
- Protection class IP20

Pinning overview

Position	Notice	Pinning assignment
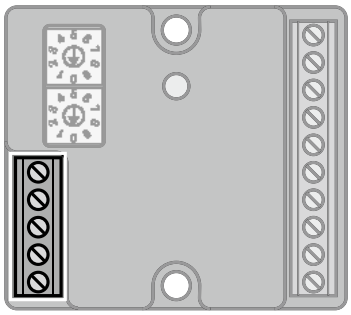	**DeviceNet™ and power supply** Fieldbus cable (example): CBC5-572-2M (ident no. 6606065) or RKC5701-5M (ident no. 6931035)	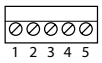 1 = V + 2 = CAN_H 3 = SHD 4 = CAN_L 5 = V –
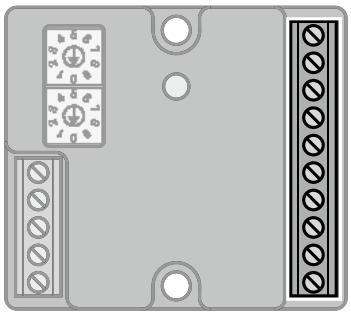	**I/O channels**	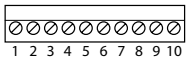 1 = V – 2 = I/O 0 3 = I/O 1 4 = I/O 2 5 = I/O 3 6 = I 4 7 = I 5 8 = I 6 9 = I 7 10 = V +

Technical data

Type	FDN20-4S-4XSG
Ident no.	6611359
Power supply	
Supply voltage	24 VDC
Operating voltage range	11…26 VDC
Number of channels	8
Power loss, typical	≤ 1.2 W
System data	
Fieldbus transmission rate	125…500 kbps
Fieldbus addressing	2 decimally coded rotary switches
Fieldbus address range	0…63
Fieldbus connection technology	screw terminals
Inputs	
Number of channels	8
Input voltage	11…26 VDC
Input type	PNP
Type of input diagnostics	common diagnostics
Low level signal voltage	< 4 V
High level signal voltage	8…24 V
Low level signal current	< 0.5 mA
High level signal current	1…3.4 mA
Max. input current	Total: 700 mA
Outputs	
Number of channels	4
Switching frequency	≤ 100 Hz
Output voltage	18…26 VDC
Output current per channel	0.5 A (from DeviceNet™)
Output type	PNP
Type of output diagnostics	common diagnostics
Short-circuit protection	yes
Connectivity	Screw
Environmental Conditions	
Ambient temperature	-40…+70 °C
Mechanical data	
Mounting instruction	for mounting on panel; on DIN rail with optional adapter FDN20-BKT-DIN (# 6931105)
Protection class	IP20
Dimensions	55 x 62.5 x 23.5 mm
Approval | Certification	ATEX, IECEx, $_{c}UL_{us}$, $_{c}FM_{us}$, $_{c}CSA_{us}$

4 digital inputs, 4 universal digital channels, 24 VDC, PNP

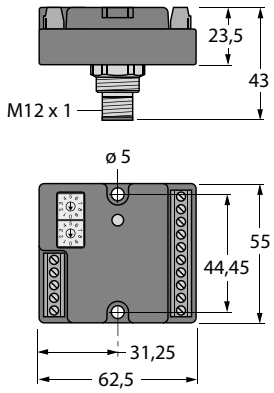

Features

- DeviceNet™ slave
- Screw-clamp terminal block, 5-pin, for DeviceNet™ fieldbus connection
- Rotary coding switch for setting the DeviceNet™ address
- M12 built-in flange for easy mounting and connection to DeviceNet™
- 4 digital Inputs
- 4 universal digital channels, DI / DO
- 24 VDC, PNP
- Output current 0.5 A
- Protection class IP20

Pinning overview

Position	Notice	Pinning assignment
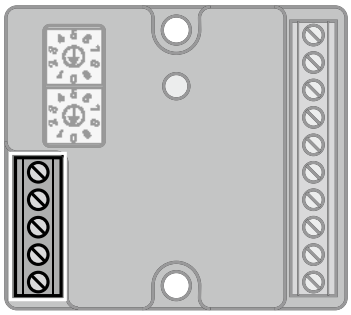	**DeviceNet™ and power supply** Fieldbus cable (example): CBC5-572-2M (ident no. 6606065) or RKC5701-5M (ident no. 6931035)	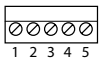 1 2 3 4 5 1 = V + 2 = CAN_H 3 = SHD 4 = CAN_L 5 = V –
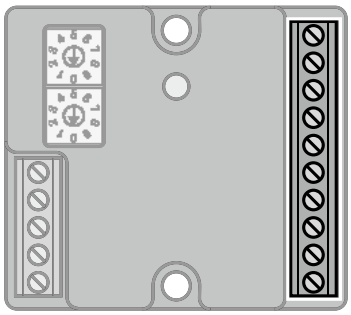	**I/O channels**	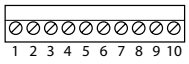 1 2 3 4 5 6 7 8 9 10 1 = V – 2 = I/O 0 3 = I/O 1 4 = I/O 2 5 = I/O 3 6 = I 4 7 = I 5 8 = I 6 9 = I 7 10 = V +
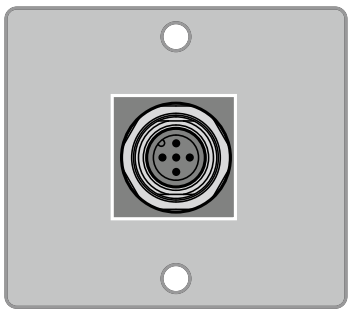	**DeviceNet™ and power supply** Rear M12 connector for direct feeding through the cabinet wall. Fieldbus cable (example): RSC-RKC5701-2M (ident no. 6604833) or RSC-WKC5701-1M (ident no. 6931039)	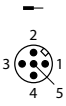 2 3 1 4 5 1 = Shield 2 = RD (V +) 3 = BK (V –) 4 = WH (CAN H) 5 = BU (CAN L)

Technical data

Type	FDN20-4S-4XSG-E
Ident no.	6611343
Power supply	
Supply voltage	24 VDC
Operating voltage range	11…26 VDC
Number of channels	8
Power loss, typical	≤ 1.2 W
Voltage supply connection	Screw terminals or M12
System data	
Fieldbus transmission rate	125…500 kbps
Fieldbus addressing	2 decimally coded rotary switches
Fieldbus address range	0…63
Fieldbus connection technology	Screw terminals or M12
Inputs	
Number of channels	8
Input voltage	11…26 VDC
Input type	PNP
Type of input diagnostics	common diagnostics
Low level signal voltage	< 4 V
High level signal voltage	8…24 V
Low level signal current	< 0.5 mA
High level signal current	1…3.4 mA
Max. input current	Total: 700 mA
Outputs	
Number of channels	4
Switching frequency	≤ 100 Hz
Output voltage	18…26 VDC
Output current per channel	0.5 A (from DeviceNet™)
Output type	PNP
Type of output diagnostics	common diagnostics
Short-circuit protection	yes
Connectivity	Screw
Environmental Conditions	
Ambient temperature	-40…+70 °C
Mechanical data	
Mounting instruction	for mounting on control cabinet wall
Protection class	IP20
Dimensions	55 x 62.5 x 23.5 mm
Approval | Certification	ATEX, IECEx, $_{c}UL_{us}$, $_{c}FM_{us}$, $_{c}CSA_{us}$

16 digital inputs, 24 VDC, PNP

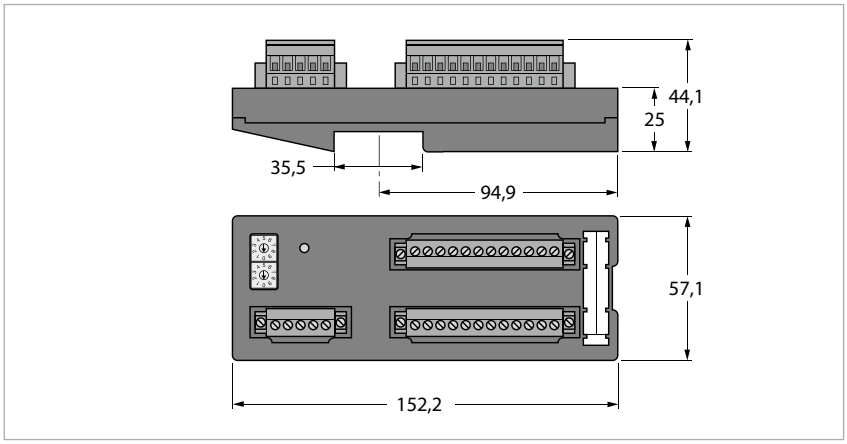

Features

- DeviceNet™ slave
- Removable screw-clamp terminal block, 5-pin, for DeviceNet™ fieldbus connection
- Rotary coding switch for setting the DeviceNet™ address
- 3 I/O power supply groups each galvanically separated
- 16 digital inputs
- 24 VDC, PNP
- Protection class IP20

Pinning overview

Position	Notice	Pinning assignment
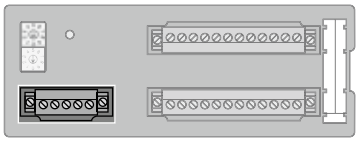	**DeviceNet™ and power supply** Fieldbus cable (example): CBC5-572-2M (ident no. 6606065) or RKC5701-5M (ident no. 6931035)	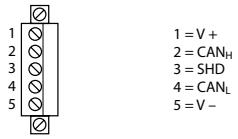
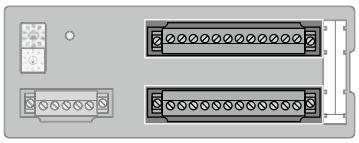	**Power supply and I/O channels** AUX1: Supply of the I/O channels 0 to 7 AUX2: Supply of the I/O channels 8 to 13 AUX3: Supply of the I/O channels 14 to 15 Via terminals V+ and V- more devices can be fed from the DeviceNet™ supply with 24 VDC up to 0.7 A.	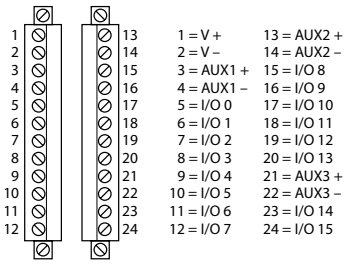

Technical data

Type	FDN20-16S
Ident no.	6611312
Power supply	
Supply voltage	24 VDC
Operating voltage range	11…26 VDC
Number of channels	16
Power loss, typical	≤ 1.2 W
System data	
Fieldbus transmission rate	125…500 kbps
Fieldbus addressing	2 decimally coded rotary switches
Fieldbus address range	0…63
Fieldbus connection technology	pluggable screw terminal
Inputs	
Number of channels	16
Input voltage	11…26 VDC
Input type	PNP
Type of input diagnostics	common diagnostics
Low level signal voltage	< 4 V
High level signal voltage	8…24 V
Low level signal current	< 0.5 mA
High level signal current	1…3.4 mA
Max. input current	Total: 700 mA
Environmental Conditions	
Ambient temperature	-40…+70 °C
Mechanical data	
Mounting instruction	for DIN rail
Protection class	IP20
Dimensions	57.1 x 152.2 x 44.1 mm
Approval | Certification	ATEX, IECEx, $_{c}$UL$_{us}$, $_{c}$FM$_{us}$, $_{c}$CSA$_{us}$

16 universal digital channels, 24 VDC, PNP

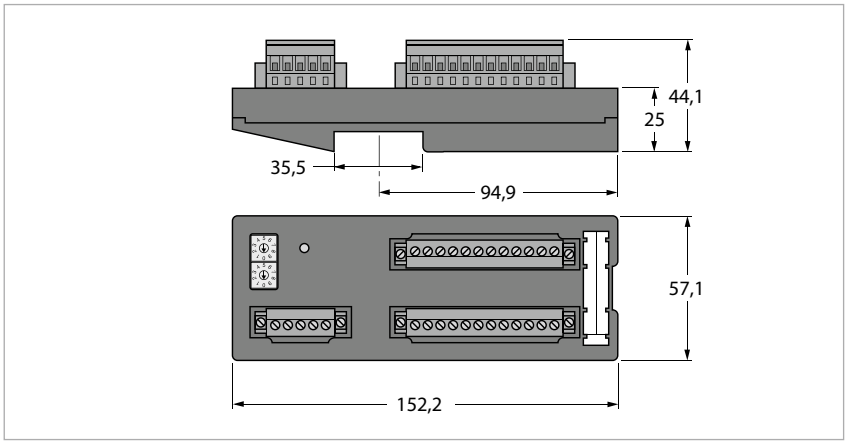

Features

- DeviceNet™ slave
- Removable screw-clamp terminal block, 5-pin, for DeviceNet™ fieldbus connection
- Rotary coding switch for setting the DeviceNet™ address
- 3 I/O power supply groups each galvanically separated
- 16 universal digital channels, DI / DO
- 24 VDC, PNP
- output current: 0.5A
- Protection class IP20

Pinning overview

Position	Notice	Pinning assignment
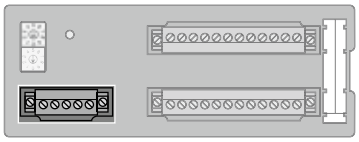	**DeviceNet™ and power supply** Fieldbus cable (example): CBC5-572-2M (ident no. 6606065) or RKC5701-5M (ident no. 6931035)	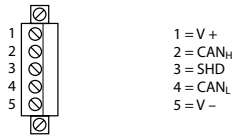
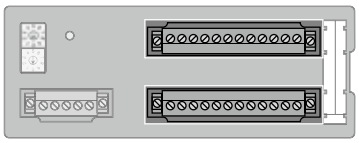	**Power supply and I/O channels** AUX1: Supply of the I/O channels 0 to 7 AUX2: Supply of the I/O channels 8 to 13 AUX3: Supply of the I/O channels 14 to 15 Via terminals V+ and V- more devices can be fed from the DeviceNet™ supply with 24 VDC up to 0.7 A.	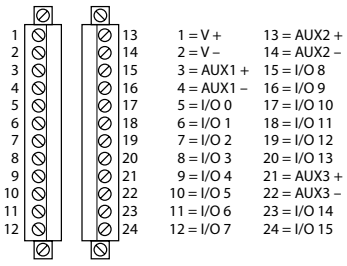

Technical data

Type	FDN20-16XSG
Ident no.	6611373
Power supply	
Supply voltage	24 VDC
Operating voltage range	11…26 VDC
Number of channels	16
Power loss, typical	≤ 1.2 W
System data	
Fieldbus transmission rate	125…500 kbps
Fieldbus addressing	2 decimally coded rotary switches
Fieldbus address range	0…63
Fieldbus connection technology	pluggable screw terminal
Inputs	
Number of channels	16
Input voltage	11…26 VDC
Input type	PNP
Type of input diagnostics	common diagnostics
Low level signal voltage	< 4 V
High level signal voltage	8…24 V
Low level signal current	< 0.5 mA
High level signal current	1…3.4 mA
Max. input current	Total: 700 mA
Outputs	
Number of channels	16
Switching frequency	≤ 100 Hz
Output voltage	18…26 VDC
Output current per channel	0.5A (from Aux)
Output type	PNP
Type of output diagnostics	common diagnostics
Short-circuit protection	yes
Environmental Conditions	
Ambient temperature	-40…+70 °C
Mechanical data	
Mounting instruction	for DIN rail
Protection class	IP20
Dimensions	57.1 x 152.2 x 44.1 mm
Approval | Certification	ATEX, IECEx, $_{c}$UL$_{us}$, $_{c}$FM$_{us}$, $_{c}$CSA$_{us}$

4 digital inputs, 4 universal digital channels, 24 VDC, PNP

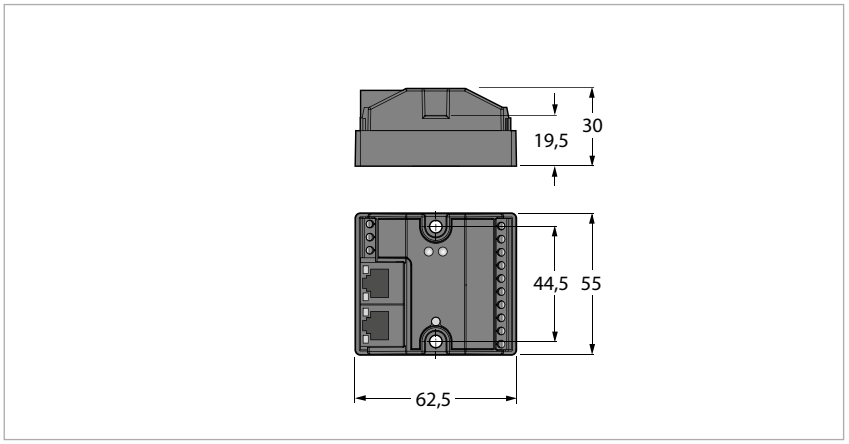

Features

- EtherNet/IP™ slave
- Modbus TCP slave
- PROFINET slave
- 2 RJ45 ports for the Ethernet connection
- Integrated Ethernet switch
- 10/100 Mbps
- 4 digital Inputs
- 4 universal digital channels, DI / DO
- 24 VDC, PNP
- Output current: 1.0 A
- Protection class IP20

Pinning overview

Position	Notice	Pinning assignment
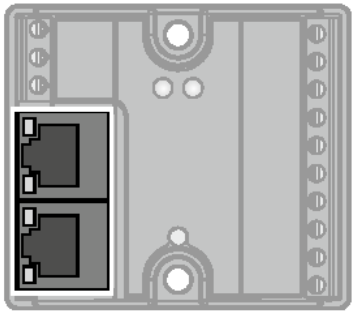	**Ethernet** Fieldbus cable (example): RJ45S-RJ45S-441-2M (ident no. 6932517) or RJ45-FKSDD-441-0.5M/S2174 (ident no. 6914221)	 1 = TX + 2 = TX – 3 = RX + 4 = n.c. 5 = n.c. 6 = RX – 7 = n.c. 8 = n.c.
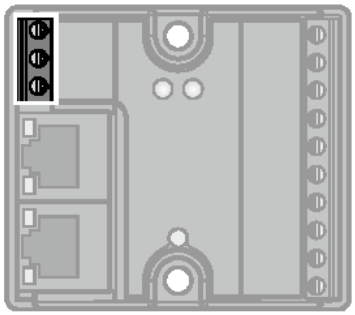	**Power supply**	 1 = ⏚ 2 = V1 – 3 = V1 +
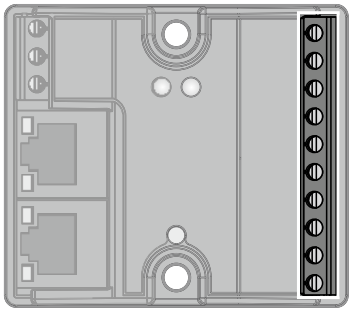	**I/O channels**	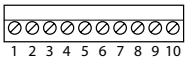 1 = V1 – 2 = I/O 1 3 = I/O 2 4 = I/O 3 5 = I/O 4 6 = I 5 7 = I 6 8 = I 7 9 = I 8 10 = V_{OUT}1 +

Technical data

Type	FEN20-4DIP-4DXP
Ident no.	6931090

Power supply	
Supply voltage	24 VDC
Operating voltage range	12…30 VDC
Galvanic separation	500 V I/Os to Ethernet
Number of channels	8
Power loss, typical	≤ 2.4 W
Voltage supply connection	screw terminals

System data	
Connection technology Ethernet	2 x RJ45 sockets
Protocol detection	automatic
Web server	192.168.1.254 (Default)
Service interface	Ethernet

Modbus TCP	
Addressing	Static IP, BOOTP, DHCP
Supported function codes	FC1, FC2, FC3, FC4, FC5, FC6, FC15, FC16, FC23
Simultaneous CIP connections	6
Input Data Size	max. 1 register
Input register start address	0 (0x0000 hex)
Output Data Size	max. 1 register
Output register start address	2048 (0x0800 hex)

EtherNet/IP™	
Addressing	acc. to EtherNet/IP™ specification
Quick Connect (QC)	< 150 ms
Device Level Ring (DLR)	supported
Simultaneous CIP connections	6

PROFINET	
Addressing	DCP
Conformance Class	B (RT)
MinCycleTime	1 ms
Fast Start-Up (FSU)	< 150 ms
Diagnostics	acc. to PROFINET alarm handling
Topology detection	supported
Automatic addressing	supported

Inputs	
Number of channels	8
Input voltage	24 VDC
Input type	PNP
Type of input diagnostics	summarized diagnostics
Low level signal voltage	< 7 VDC
High level signal voltage	7…30 VDC
Low level signal current	< 1.5 mA
High level signal current	> 2 mA
Input delay	2.5 ms
Max. input current	6 mA

Outputs	
Number of channels	4
Output voltage	12…30 VDC
Output current per channel	1 A
Output total current	4 A
Output type	PNP
Load type	resistive, inductive, lamp load
Short-circuit protection	yes

Environmental Conditions	
Ambient temperature	-40…+70 °C
Storage temperature	-40 … +85 °C

Mechanical data	
Mounting instruction	for mounting on panel; on DIN rail with optional adapter FDN20-BKT-DIN (# 6931105)
Protection class	IP20
Dimensions	55 x 62.5 x 30 mm

Approval | Certification	$_{c}UL_{us}$

16 universal digital channels, 24 VDC, PNP

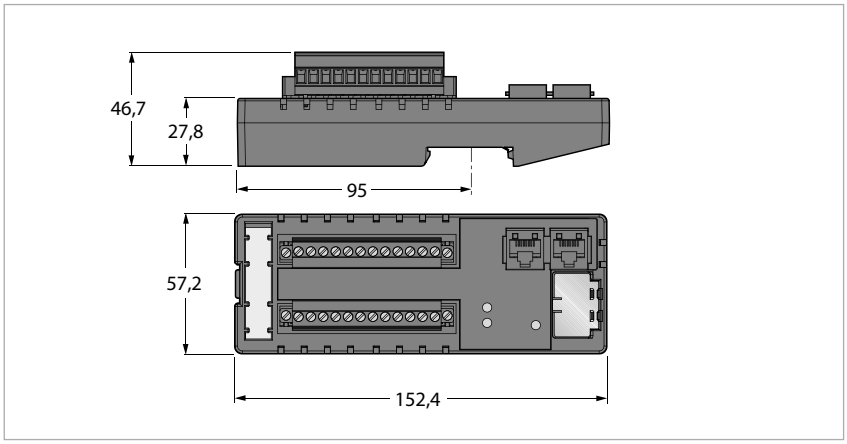

Features

- EtherNet/IP™ slave
- Modbus TCP slave
- PROFINET slave
- 2 RJ45 ports for the Ethernet connection
- Integrated Ethernet switch
- 10/100 Mbps
- 16 universal digital channels, DI / DO
- 24 VDC, PNP
- Output current: 1.0 A
- Protection class IP20

Pinning overview

Position	Notice	Pinning assignment
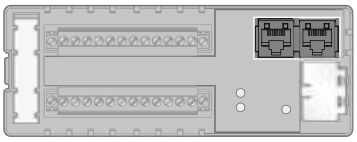	**Ethernet** Fieldbus cable (example): RJ45S-RJ45S-441-2M (ident no. 6932517) or RJ45-FKSDD-441-0.5M/S2174 (ident no. 6914221)	 1 = TX + 2 = TX – 3 = RX + 4 = n.c. 5 = n.c. 6 = RX – 7 = n.c. 8 = n.c.
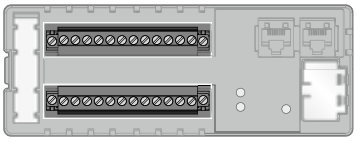	**Power supply and I/O channels** The internal module electronics and the I/O channels 0 to 7 are supplied via AUX1. The I/O channels 8 to 13 are supplied via AUX2. The I/O channels 14 to 15 are supplied via AUX3. Via terminals V+ and V- more devices can be fed with 24 VDC up to 0.7 A.	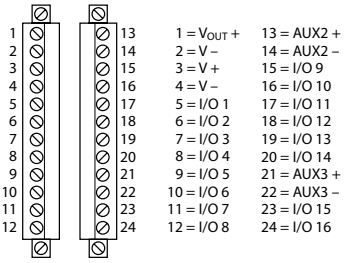

Technical data

Type	FEN20-16DXP
Ident no.	6931089

Power supply	
Supply voltage	24 VDC
Operating voltage range	12…30 VDC
Galvanic separation	500 V I/Os to Ethernet
Number of channels	16
Power loss, typical	≤ 2.4 W
Voltage supply connection	pluggable screw terminal

System data	
Connection technology Ethernet	2 x RJ45 sockets
Protocol detection	automatic
Web server	192.168.1.254 (Default)
Service interface	Ethernet

Modbus TCP	
Addressing	Static IP, BOOTP, DHCP
Supported function codes	FC1, FC2, FC3, FC4, FC5, FC6, FC15, FC16, FC23
Simultaneous CIP connections	6
Input Data Size	max. 1 register
Input register start address	0 (0x0000 hex)
Output Data Size	max. 1 register
Output register start address	2048 (0x0800 hex)

EtherNet/IP™	
Addressing	acc. to EtherNet/IP™ specification
Quick Connect (QC)	< 150 ms
Device Level Ring (DLR)	supported
Simultaneous CIP connections	6

PROFINET	
Addressing	DCP
Conformance Class	B (RT)
MinCycleTime	1 ms
Fast Start-Up (FSU)	< 150 ms
Diagnostics	acc. to PROFINET alarm handling
Topology detection	supported
Automatic addressing	supported

Inputs	
Number of channels	16
Input voltage	24 VDC
Input type	PNP
Type of input diagnostics	summarized diagnostics
Low level signal voltage	< 9 VDC
High level signal voltage	11…30 VDC
Low level signal current	< 1.5 mA
High level signal current	> 2.5 mA
Input delay	2.5 ms
Max. input current	6 mA

Outputs	
Number of channels	16
Output voltage	12…30 VDC
Output current per channel	at 70 °C: 0.5 A (8 A in total) or 0.75 A (6 A in total); at 50 °C: 0.75 A (12 A in total) or 1 A (8 A in total)
Output type	PNP
Load type	resistive, inductive, lamp load
Short-circuit protection	yes

Environmental Conditions	
Ambient temperature	-40…+70 °C
Storage temperature	-40 … +85 °C

Mechanical data	
Mounting instruction	for DIN rail
Protection class	IP20
Dimensions	57.1 x 152.2 x 46.7 mm

Approval | Certification	$_{c}UL_{us}$

Block I/O Modules Fxx20 – Accessories

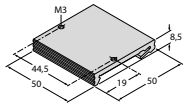

FDN20-BKT-DIN
6931105

Mounting adapter for mounting of 8-channel Fxx20 modules on DIN rail (TS 35)

Fxx20 Accessories

excom® – Remote-I/O system



excom® – Remote-I/O for non-Ex and Ex areas

excom® is a remote I/O system for use in Ex and non-Ex areas. This benefits the user not only in terms of system components optimized for a particular zone, but also because of the standard concept for configuring and parametrizing the periphery and field instrumentation.
The *excom*® system provides bus-capable, decentralized input and output modules with protection to IP20 for connecting intrinsically safe and non-intrinsically safe digital and analog field devices. Depending on the periphery used, the type of explosion protection provided by the system allows operation in zones 1 and 2. The field circuits are approved for zone 0.
The main elements of the modular system consist of power supply units, gateways and I/O modules, as well as the module racks for housing the components. The backplane is integrated in the module racks. The backplane contains the terminal level for the field devices and is used to distribute energy and transmit data. The power supply units provide the power supply of the entire system and the periphery.

All modules can be connected particularly easily: The gateways, power supply units, and I/O modules, are fitted easily to the module rack. This provides all the internal connections; only the peripheral devices have to be connected. All modules can be fitted or removed (hot swapped) during operation. The system checks automatically whether the new module matches the settings of the slot.
The *excom*® DTM (Device Type Manager) makes it possible to easily commission the periphery and the field instrumentation via the PROFIBUS network – even without a higher-level Class 1 master of the distributed control system. The integrated system scan function enables fast and error-free commissioning. The *excom*® system also supports the connection of HART® compatible field devices. This makes it possible to implement end-to-end HART® communication via PROFIBUS-DPV1 right down to the process control system; HART® secondary variables can also be transmitted cyclically via DPV0 communication.

Standard system features

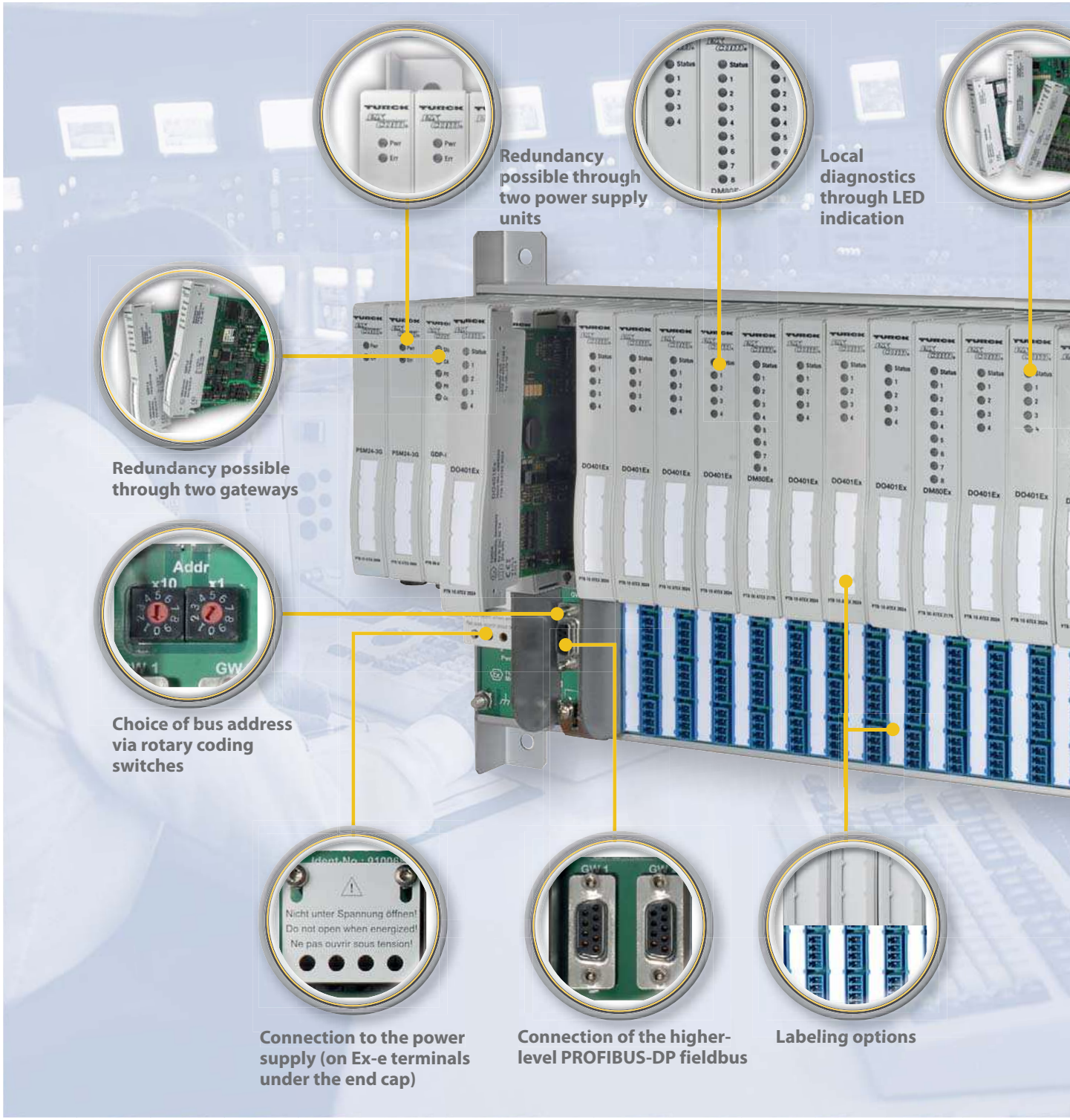

Hans Turck GmbH & Co. KG ▪ Tel. +49 208 49 52-0 ▪ Fax +49 208 49 52-264

features



Different I/O module types

Connection of the Ex-i field devices via removable screw terminals or cage clamp terminals

Application range: non-intrinsically safe applications



MT08



MT16

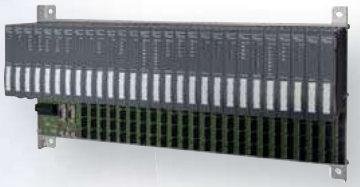

MT24

Application range: intrinsically safe circuits and installation in the non-Ex area and in zone 2



MT08

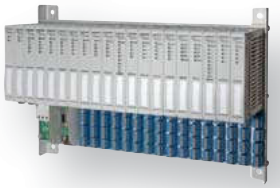

MT16



MT24

Application range: intrinsically safe circuits and installation in zone 1



MT16

Our Strengths – Your advantages



excom® Remote I/O – One system for all zones

The Remote-I/O system *excom*® allows the user to freely select the location of installation. The system can be installed both in zone 1 and in zone 2 or in the non-Ex area. This benefits the user not only in terms of components optimized for a particular zone, but also because of the standard concept for configuring and parametrizing the periphery and field instrumentation. If this system is installed in zones 1 and 2, a specially optimized power supply unit is available that generates the intrinsically safe system voltage. The interface to the fieldbus, in this case PROFIBUS-DP, is also intrinsically safe. A new module rack offers here the possibility of operating up to 24 I/O modules in the non-Ex area and in zone 2, which further reduces the basic installation costs.



Plug and Play – Also during ongoing operation

Hot swapping makes the *excom*® system particularly user-friendly: The system can be serviced and changed at any time. The I/O modules – including the power supply modules – can be plugged and unplugged during ongoing operation, even in zone 1, without disturbing the field communication. This increases plant availability and saves time when the system is commissioned and extended.



DTM-based – Online parametrization and configuration

The new *excom*® DTM and the advanced gateway communication mechanisms in the gateway allow the user to easily operate the periphery and the field instrumentation at any time via the PROFIBUS network, with or without the higher-level master Class 1 control system. With the help of an FDT frame such as PACTware™, all systems present on the PROFIBUS can be scanned and copied to the project tree of the frame application. All peripheral modules and HART® field devices will then be available online for the operator. The entire field wiring can thus be checked and the HART® field devices with their associated DTM diagnosed and configured. In this way, a validated transfer of the field installation to the control system is possible.



HART® – End-to-end parametrization from the process control system down to the field device

excom® takes advantage of the worldwide use of HART® communication and allows field devices to be HART® parametrized seamlessly via the bus. The system transmits the process and diagnostic data of the periphery and communicates, if necessary, with the HART® field instrumentation. This gives the control system additional information on process values, diagnostics and asset management directly in digital form. Since the communication protocol allows the transmission of data over already installed lines, the user can build, service and maintain the last mile with little effort.



High availability – Redundant power supply and communication

The Remote-I/O system *excom*® from TURCK has proven its worth in the process industry and the associated demanding requirements in terms of equipment safety. The system allows a fully redundant setup for the power supply and the communication interface. Either a 24 VDC or 230 VAC power supply is possible. As a standard feature, *excom*® also provides a system-redundancy solution for the bus structure. This allows the redundant *excom*® system to be connected via redundant bus technology to a process control system with a PROFIBUS master. Thanks to the open standard, the redundancy system can be operated with any master available on the market.



System enclosures – Fieldbus system with full approval

TURCK offers a comprehensive enclosure concept for the *excom*® system. The enclosures are made of robust stainless steel, feature ignition protection type Exe and allow installation in zone 1. In order to save the user the trouble of getting approvals for each system component, TURCK has obtained a system approval for the stainless steel enclosures with integrated module rack. All components used have been individually tested and approved. In this way customized solutions are also possible. Assembly and installation are carried out directly at TURCK in order to ensure that the required clearance and creepage distances are met.

System installation – Overview

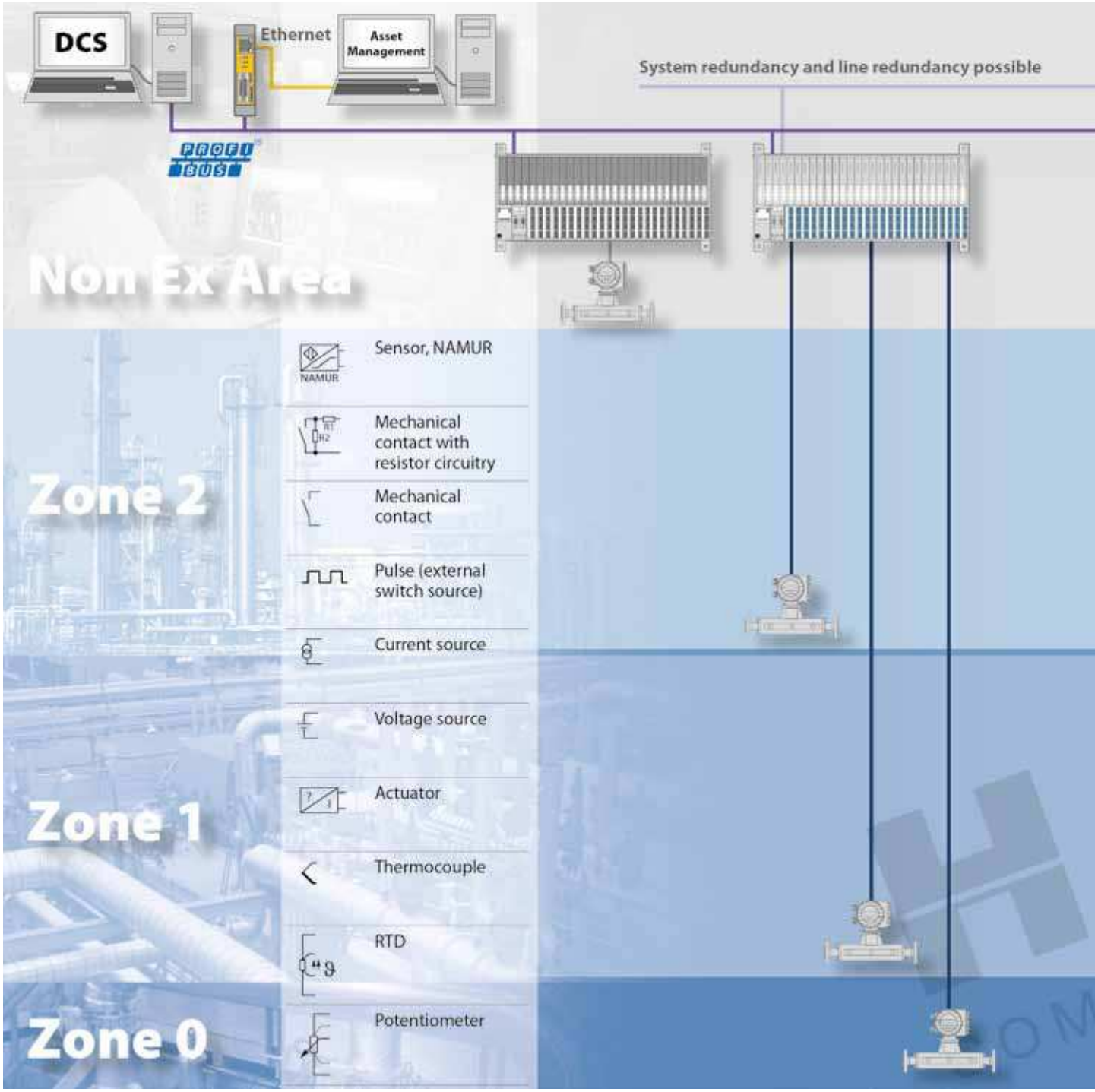

Hans Turck GmbH & Co. KG ▪ Tel. +49 208 49 52-0 ▪ Fax +49 208 49 52-264

Overview

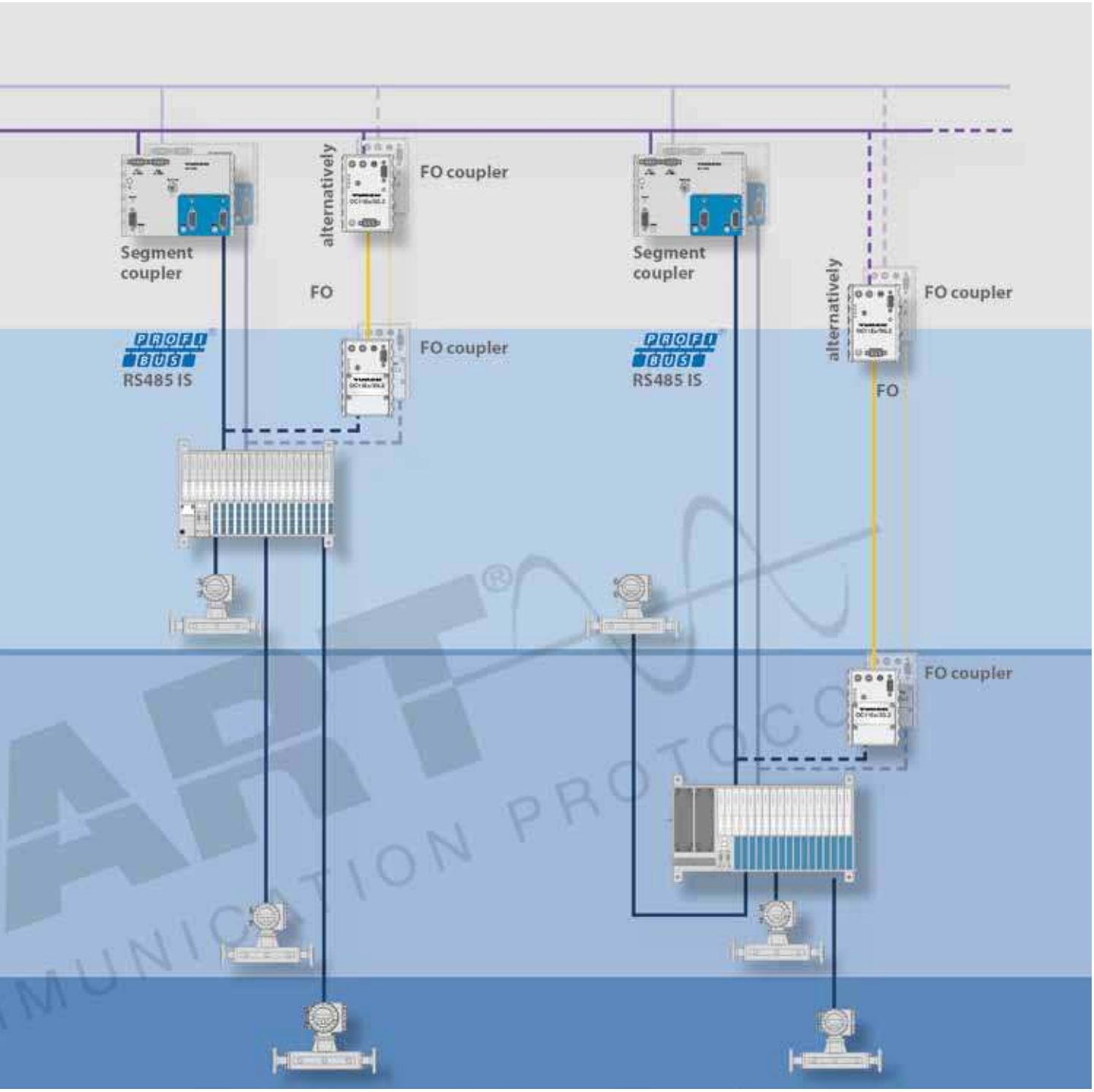
Segment coupler
alternatively
FO coupler
FO
FO coupler
PROFI BUS
RS485 IS
Segment coupler
alternatively
FO coupler
FO
PROFI BUS
RS485 IS
FO coupler

Solutions for the Ex area



***excom*® – Solutions for the Ex area**

The *excom*® series gives the user complete freedom in the choice of the installation location. It can be installed in zones 1 and 2 and in the non-Ex area. The user benefits here not only from the components that were optimized for the particular zone provided, but also from a standard concept for the configuration and parametrization of the periphery and field instrumentation.
A standard Ex-i periphery supports signal processing and field device control from zones 0, 1 and 2. If this periphery is installed in zones 1 and 2 in order to detect signals as closely as possible to the location of the instrumentation, an optimized power supply module is available specially for this application, which generates an intrinsically safe system voltage.
The interface to the fieldbus, in this case PROFIBUS-DP, is also intrinsically safe. This configuration enables the entire system to be fully maintained during operation in the Ex area. In the cabinets previously used in *excom*® installations in zone 2, the space now available can be used for additional components, such as valve blocks or load switches.
A special gateway provides the necessary protection of the Ex-i periphery to the bus so that a separate segment coupler is not required for implementing the intrinsically safe physical bus characteristics of RS485-IS, if the *excom*® system is installed in the safe area.

Type	Ident No.	Description	Page
DM80EX	6884006	I/O module, digital, 8-channel	188
DF20EX	6884061	Frequency module, 2-channel	190
DI401EX	6884232	Input module, digital, 4-channel	192
DO401EX	6884203	Output module, digital, 4-channel	194
AI401Ex	6884204	Input module, analog, 4-channel	196
AI41EX	6884020	Input module, analog, passive, 4-channel	198
AI43EX	6884137	Potentiometer module, 4-channel	200
AO401Ex	6884205	Output module, analog, 4-channel	202
AIH40EX	6884001	Input module, analog, active, HART®, 4-channel	204
AIH41EX	6884005	Input module, analog, passive, HART®, 4-channel	206
AOH40EX	6884003	Output module, analog, HART®, 4-channel	208
TI40Ex	6884000	Input module, temperature, 4-channel	210
TI41Ex	6884190	Input module, temperature, 4-channel	212
GDP-IS/FW2.2	6884210	PROFIBUS-DP interface	214
GDP-NI/FW2.2	6884225	PROFIBUS-DP interface	216
PSD24EX	6881721	Power supply module, 24 VDC, zone 1	218
PPSA230EX	6900293	Converter, 230 VAC	220
PPSA115EX	6900294	Converter, 115 VAC	222
PSM24-3G	6881722	Power supply module, 24 VDC, zone 2	224
MT-PPS	9100516	Upstream subrack for PPSA	226
MT08-2G	9100684	Module rack, zone 1, for 8 modules	228
MT16-2G	9100687	Module rack, zone 1, for 16 modules	230
MT16-2G/MSA	9100688	Module rack, zone 1, for 16 Modules, marine ship approved	232
MT08-3G	9100680	Module rack for 8 modules, zone 2	234
MT16-3G	9100681	Module rack for 16 modules, zone 2	236
MT24-3G	9100682	Module rack for 24 modules, zone 2	238
SC12EX	6884047	PROFIBUS-DP segment coupler	240
OC11Ex/2G.2	6890427	PROFIBUS-DP optocoupler for zone 1	242
OC11Ex/3G.2	6890428	PROFIBUS-DP optocoupler for zone 2	244

I/O module, digital, 8-channel

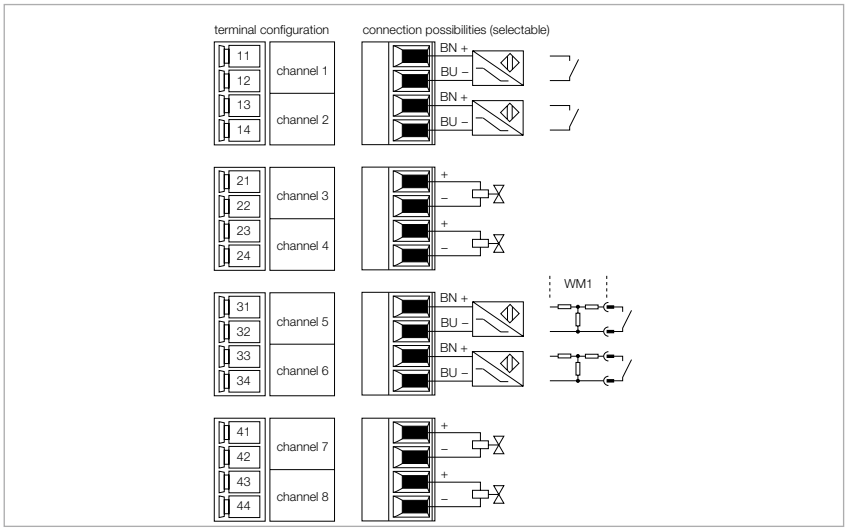

Features

- Input/output module for NAMUR sensors and actuators

The I/O module DM80Ex is designed for the connection of NAMUR sensors (DIN EN 60 60947-5-6) and actuators. When wire-break or short-circuit monitoring are activated, mechanical contacts can only be connected with a corresponding resistor circuitry (WM1, Ident no. 0912101).

The module features protection class Ex ib IIC and can be mounted in zone 1 in combination with *excom*®. The explosion protection category of inputs/outputs is Ex ia IIC.

When connecting the field devices, care has to be taken that all inputs and/or outputs are on a common potential.

Input and output mode can be adjusted via the PROFIBUS-DP master. The following parameters can be adjusted: switching behaviour, switch-on delay, default value, wire-break and short circuit monitoring.

The user can furthermore determine whether an input or an output should be provided at the connecting point. The following configurations are possible: 8 inputs/0 outputs; 6 inputs/2 outputs up to 0 inputs/8 outputs (GSD-file, Mode 2). This guarantees optimal adaptation to the corresponding application environment.



Technical data

Type	DM80EX
Ident no.	6884006

Power supply

Supply voltage	via the backplanes, central power supply
Power consumption	≤ 1 W
Galvanic separation	to int. bus and supply circuit
Number of channels	8-channel

Inputs

Input circuits	acc. to EN 60947-5-6 (NAMUR), intrinsically safe acc. to EN 60079-11
No-load voltage	8 VDC
Short-circuit current	4 mA
Switching frequency	≤ 100 Hz
Short-circuit	< 367 Ω
Wire-break	< 0.2 mA
Switch-on threshold:	1.8 mA
Switch-off threshold:	1.4 mA

Outputs

Output circuits	for intrinsically safe actuators
No-load voltage	8 VDC
Nominal current	4 mA
Switching frequency	≤ 100 Hz
Short circuit	< 367 Ω
Wire-break	< 0.2 mA
Internal resistance R_i	320 Ω

Approvals and declarations

Ex approval acc. to conformity certificate	PTB 00 ATEX 2178
Device designation	⟨Ex⟩ II 2 (1) G Ex ib [ia] IIC T4 ⟨Ex⟩ II (1) D [Ex ia IIIC]
Max. values:	Terminal connection: 1+2 / 3+4
Max. output voltage U_o	≤ 9.6 V
Max. output current I_o	≤ 44 mA
Max. output power P_o	≤ 106 mW
Characteristic	linear

Internal inductance/capacitance L_i/C_i

L_i	negligibly small
C_i	negligibly small

External inductance/capacitance L_o/C_o

	IIC	IIB
L_o [mH]	C_o [µF]	C_o [µF]
2.0	0.9	5.1
1.0	1.1	6.1
0.5	1.3	7.3
0.2	1.7	8.6

Indication

Operational readiness	1 x green / red
State/ Fault	8 x yellow / red

Environmental Conditions

Ambient temperature	-20…+70 °C
Relative humidity	≤ 95 % at 55 °C acc. to EN 60068-2
Vibration test	acc. to IEC 60068-2-6
Shock test	acc. to IEC 60068-2-27
EMC	acc. to EN 61326-1 (2006) acc. to NAMUR NE21 (2007)
MTTF	141 years acc. to SN 29500 (Ed. 99) 40 °C

Mechanical data

Housing material	plastic
Connection mode	module, plugged on rack
Protection class	IP20
Dimensions	18 x 118 x 103 mm

Approval | Certification	ATEX, IECEx, $_cFM_{us}$, TR CU, KOSHA, NEPSI, INMETRO, GL, DNV, BV, LR

Frequency module, 2-channel

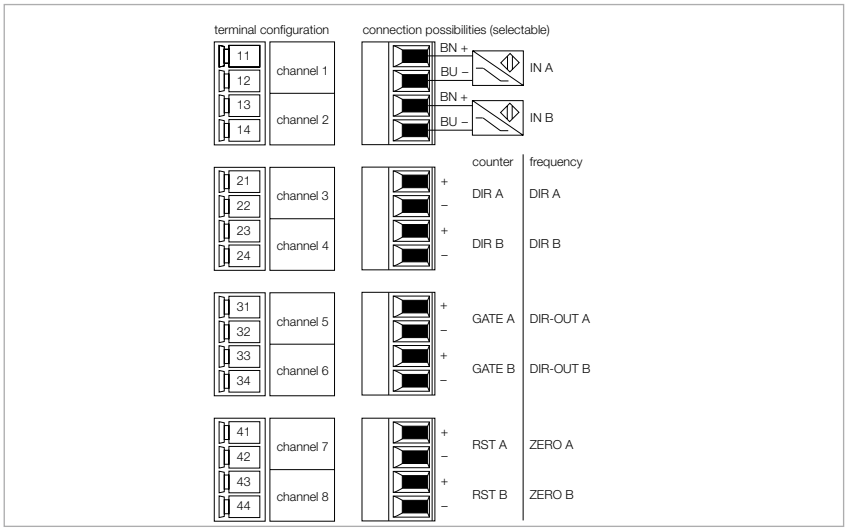

Features

- Frequency module for the connection of intrinsically safe sensors (according to NAMUR)

The input module DF20EX is equipped with 8 channels according to NAMUR which are split into two blocks. There is one frequency input per block and three control inputs/outputs.

The module features protection class Ex ib IIC and can be mounted in zone 1 in combination with *excom*®. When connecting the field devices, care has to be taken that all inputs and/or outputs are on a common potential. The explosion protection category of inputs/outputs is Ex ia IIC.

The module can be used as a counter or frequency module: It is thus suited for pulse counting of binary input signals or frequency measurements of binary pulse sequences of NAMUR sensors.

The counting direction can either be set externally via a control input or internally by setting a parameter. The maximum frequency of one block is 4 kHz; with 2 blocks the frequency is reduced to 2 kHz.

Input and output mode can be adjusted via the PROFIBUS-DP master. Each channel is equipped with parametrizable wire-break/short-circuit monitoring.



Technical data

Type	DF20EX
Ident no.	6884061

Power supply

Supply voltage	via the backplanes, central power supply
Power consumption	≤ 1 W
Galvanic separation	to int. bus and supply circuit
Number of channels	2-channel

Inputs

Input circuits	acc. to EN 60947-5-6 (NAMUR), intrinsically safe acc. to EN 60079-11
No-load voltage	8 VDC
Short-circuit current	4 mA
Switching frequency	≤ 4000 Hz
Short-circuit	< 367 Ω
Wire-break	< 0.2 mA
Switch-on threshold:	1.8 mA
Switch-off threshold:	1.4 mA

Response characteristic

Measuring accuracy	≤ 0.1 % of full scale

Approvals and declarations

Ex approval acc. to conformity certificate	PTB 00 ATEX 2178
Device designation	⟨Ex⟩ II 2 (1) G Ex ib [ia] IIC T4 ⟨Ex⟩ II (1) D [Ex ia IIIC]
Max. values:	Terminal connection: 1+2 / 3+4
Max. output voltage U_o	≤ 9.6 V
Max. output current I_o	≤ 44 mA
Max. output power P_o	≤ 106 mW
Characteristic	linear

Internal inductance/capacitance L_i/C_i

L_i	negligibly small
C_i	negligibly small

External inductance/capacitance L_o/C_o

	IIC	IIB
L_o [mH]	C_o [µF]	C_o [µF]
2.0	0.9	5.1
1.0	1.1	6.1
0.5	1.3	7.3
0.2	1.7	8.6

Indication

Operational readiness	1 x green / red
State/ Fault	8 x yellow / red

Environmental Conditions

Ambient temperature	-20…+70 °C
Relative humidity	≤ 95 % at 55 °C acc. to EN 60068-2
Vibration test	acc. to IEC 60068-2-6
Shock test	acc. to IEC 60068-2-27
EMC	acc. to EN 61326-1 (2006) acc. to NAMUR NE21 (2007)
MTTF	101 years acc. to SN 29500 (Ed. 99) 40 °C

Mechanical data

Housing material	plastic
Connection mode	module, plugged on rack
Protection class	IP20
Dimensions	18 x 118 x 103 mm

Approval | Certification	ATEX, IECEx, $_cFM_{us}$, TR CU, CMI, KOSHA, INMETRO, GL, DNV, BV, LR

Input module, digital, 4-channel

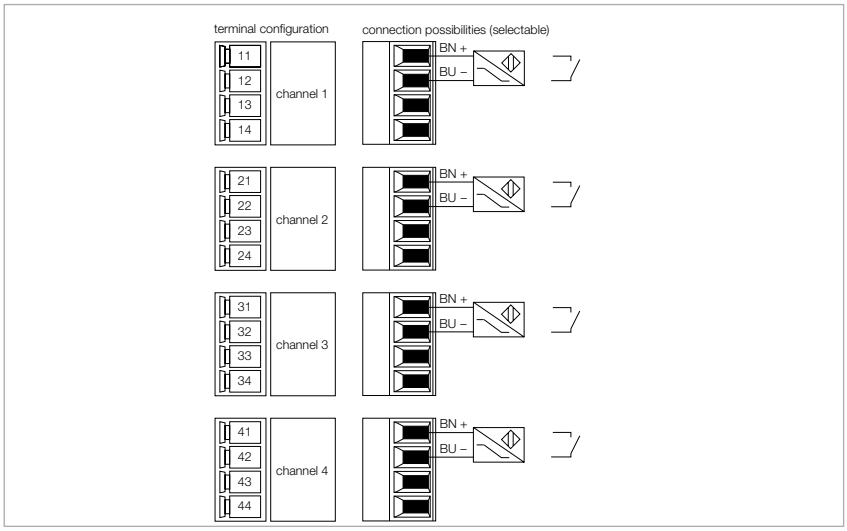

Features

- Input module for intrinsically safe sensors
- Complete galvanic isolation

The input module DI401-EX is designed for the connection of NAMUR sensors (DIN EN 60947-5-6) or mechanical contacts.

When wire-break or short-circuit monitoring are activated, mechanical contacts can only be connected with a corresponding resistor circuitry (WM1, Ident no. 0912101).

The module features protection class Ex ib IIC and can be mounted in zone 1 in combination with *excom*®. The explosion protection category of the inputs is Ex ia IIC. The inputs are galvanically isolated from each other.

The behaviour of the inputs can be adjusted via the PROFIBUS-DP master. The following parameters can be adjusted: switching behaviour, switch-on delay, default value, wire-break and short circuit monitoring.



Technical data

Type	DI401EX
Ident no.	6884232

Power supply	
Supply voltage	via the backplanes, central power supply
Power consumption	≤ 0.75 W
Galvanic separation	complete galvanic isolation acc. to EN 60079-11
Number of channels	4-channel

Inputs	
Input circuits	acc. to EN 60947-5-6 (NAMUR), intrinsically safe acc. to EN 60079-11
No-load voltage	8.2 VDC
Short-circuit current	2.7 mA
Switching frequency	≤ 100 Hz
Short-circuit	< 367 Ω
Wire-break	< 0.15 mA
Switch-on threshold:	1.8 mA
Switch-off threshold:	1.3 mA

Approvals and declarations	
Ex approval acc. to conformity certificate	PTB 14 ATEX 2003
Device designation	⟨Ex⟩ II 2 (1) G Ex ib [ia] IIC T4
	⟨Ex⟩ II (1) D [Ex ia] IIIC
Max. values:	Terminal connection: 1+2
Max. output voltage U_o	≤ 8.7 V
Max. output current I_o	≤ 9.3 mA
Max. output power P_o	≤ 21 mW
Characteristic	linear

Internal inductance/capacitance L_i/C_i

L_i	negligibly small
C_i	≤ 2.0 nF

External inductance/capacitance L_o/C_o

	IIC	IIB
L_o [mH]	2.0	5.0
C_o [µF]	1.2	5.2

Indication	
Operational readiness	1 x green / red
State/ Fault	4 x yellow / red

Environmental Conditions	
Ambient temperature	-20…+70 °C
Relative humidity	≤ 95 % at 55 °C acc. to EN 60068-2
Vibration test	acc. to IEC 60068-2-6
Shock test	acc. to IEC 60068-2-27
EMC	acc. EN 61326-1 (2013) acc. to Namur NE21 (2012)
MTTF	111 years acc. to SN 29500 (Ed. 99) 40 °C

Mechanical data	
Housing material	plastic
Connection mode	module, plugged on rack
Protection class	IP20
Dimensions	18 x 118 x 103 mm

Approval | Certification	ATEX

Output module, digital, 4-channel

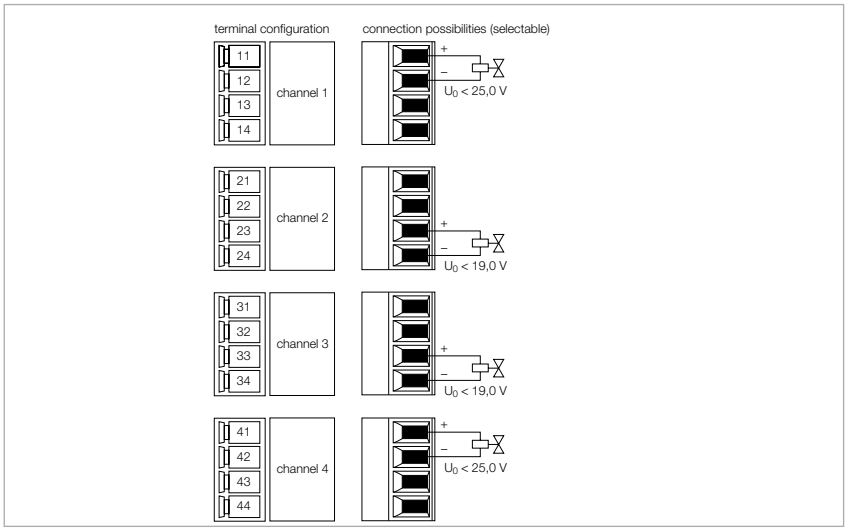

Features

- Output module for intrinsically safe actuators
- Complete galvanic isolation

The output module DO401Ex is designed for the connection of intrinsically safe actuators such as valves or indicator lights.

The module features protection class Ex ib IIC and can be mounted in zone 1 in combination with *excom*®. Explosion protection category is Ex ia IIC. The outputs are galvanically isolated from each other.

One actuator per channel can be connected. The choice of connection enables two intrinsically safe circuits with different Ex-data per channel.

Please see the load curve for the valve control values. Please refer to the Ex-approval of the valve manufacturer for the admissible limit values.

The following values are supported for example:

- 22.5 V / 5 mA
- 19.0 V / 15 mA
- 16.0 V / 25 mA
- 14.0 V / 35 mA
- 12.0 V / 45 mA



Load curve terminal connection 1+2

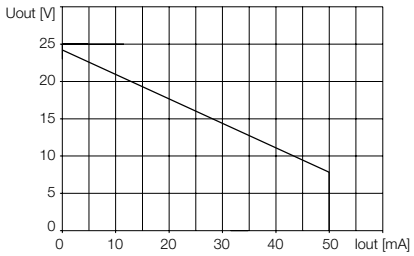

Load curve terminal connection 3+4

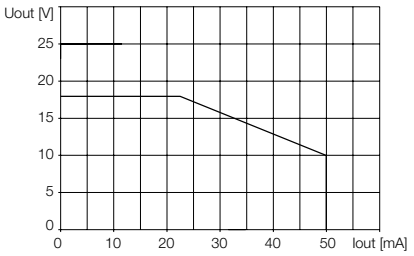

Technical data

Type	DO401EX
Ident no.	6884203

Power supply

Supply voltage	via the backplanes, central power supply
Power consumption	≤ 4.5 W
Galvanic separation	complete galvanic isolation acc. to EN 60079-11
Number of channels	4-channel

Outputs

Output circuits	for intrinsically safe actuators
Switching frequency	≤ 50 Hz
Short circuit	≥ 50 mA
Wire-break	< 1 mA

Approvals and declarations

Ex approval acc. to conformity certificate	PTB 10 ATEX 2024
Device designation	⟨Ex⟩ II 2 (1) G Ex ib [ia] IIC T4
	⟨Ex⟩ II (1) D [Ex ia IIIC]
Max. values:	Terminal connection: 1+2
Max. output voltage U_o	≤ 25 V
Max. output current I_o	≤ 80 mA
Max. output power P_o	≤ 750 mW
Characteristic	angular
Ex-inflexion point U_e/I_e	18.2 V / 41.2 mA

Internal inductance/capacitance L_i/C_i

L_i	negligibly small
C_i	negligibly small

External inductance/capacitance L_o/C_o

	IIC	IIB
L_o [mH]	C_o [nF]	C_o [nF]
2.0	—	350
1.0	—	410
0.5	—	500
0.2	—	660
0.1	110	820

Max. values:	Terminal connection: 3+4
Max. output voltage U_o	≤ 19 V
Max. output current I_o	≤ 100 mA
Max. output power P_o	≤ 710 mW
Characteristic	angular
Ex-inflexion point U_e/I_e	13.0 V / 53.4 mA

Internal inductance/capacitance L_i/C_i

L_i	negligibly small
C_i	negligibly small

External inductance/capacitance L_o/C_o

	IIC	IIB
L_o [mH]	C_o [nF]	C_o [nF]
2.0	—	1000
1.0	130	1000
0.5	140	1000
0.2	170	1100

Indication

Operational readiness	1 x green / red
State/ Fault	4 x yellow / red

Environmental Conditions

Ambient temperature	-20…+70 °C
Relative humidity	≤ 95 % at 55 °C acc. to EN 60068-2
Vibration test	acc. to IEC 60068-2-6
Shock test	acc. to IEC 60068-2-27
EMC	acc. to EN 61326-1 (2006) acc. to NAMUR NE21 (2007)
MTTF	79 years acc. to SN 29500 (Ed. 99) 40 °C

Mechanical data

Housing material	plastic
Connection mode	module, plugged on rack
Protection class	IP20
Dimensions	18 x 118 x 103 mm

Approval | Certification	ATEX, IECEx, $_cFM_{us}$, TR CU, KOSHA, INMETRO, GL, DNV, BV, LR

Input module, analog, 4-channel

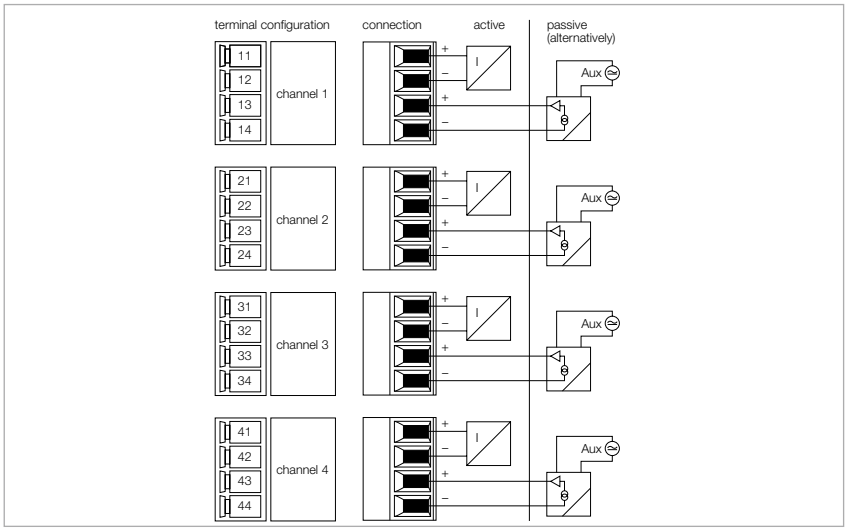

Features

- Input module for the connection of passive transmitters (active inputs) or active transmitters (passive inputs).
- Complete galvanic isolation

The input module AI401Ex is designed for the connection of 2-wire transducers (active input = source mode / transducer passive) or 4-wire transducers (passive input = sink mode / transducer active).

The module features protection class Ex ib IIC and can be mounted in zone 1 in combination with *excom*®. The field circuits feature protection class Ex ia IIC resp. Ex iaD.

The field circuits are galvanically isolated from each other.

HART® compatible transducers can be connected to the module. The field device can thus be parametrized directly at the terminals on the DIN rail with a licensed modem. An additional impedance in the circuit is not necessary.

The measuring range is digitized in the scope of 0…21 mA. For clear reading, the digitized value is displayed in a range of 0 … 21000 (independent of the parametrized measuring range) and transmitted to the host system.



Technical data

Type	AI401Ex
Ident no.	6884204

Power supply

Supply voltage	via the backplanes, central power supply
Power consumption	≤ 2.2 W
Galvanic separation	complete galvanic isolation acc. to EN 60079-11
Number of channels	4-channel

Inputs

Input circuits	intrinsically safe acc. to EN 60079-11, 0/4…20 mA
Supply voltage	15 VDC at 20 mA
Overload capability	> 21 mA
Low level control	< 3.6 mA
Short-circuit	> 24 mA (only in live zero mode)
Wire-break	< 2 mA (only in live zero mode)

Response characteristic

Resolution	14 Bit
Linearity deviation	≤ 0.05 % full scale
Temperature drift	≤ 0.005 % / K
Rise time/fall time	≤ 50 ms (10 … 90 %)
Max. measurement tolerance under EMC influence	≤ 0.1 %

Approvals and declarations

Ex approval acc. to conformity certificate	PTB 03 ATEX 2217
Device designation	⟨Ex⟩ II 2 (1) G Ex ib [ia] IIC T4 ⟨Ex⟩ II (1) D [Ex iaD]
Max. values:	Terminal connection: 1+2
Max. output voltage U_o	≤ 19.1 V
Max. output current I_o	≤ 90 mA
Max. output power P_o	≤ 615 mW
Internal resistance R_i	304 Ω
Characteristic	trapezoidal

Internal inductance/capacitance L_i/C_i

L_i	negligibly small
C_i	negligibly small

External inductance/capacitance L_o/C_o

	IIC	IIB
L_o [mH]	0.20	1.0
C_o [nF]	170	960

Max. values:	Terminal connection: 3+4
Max. output voltage U_o	≤ 6 V
Max. output current I_o	≤ 2.5 mA
Max. output power P_o	≤ 4 mW
Characteristic	linear

Internal inductance/capacitance L_i/C_i

L_i	negligibly small
C_i	negligibly small

External inductance/capacitance L_o/C_o

	IIC	IIB
L_o [mH]	10	20
C_o [nF]	1900	8600

Indication

Operational readiness	1 x green / red
State/ Fault	4 x red

Environmental Conditions

Ambient temperature	-20…+70 °C
Relative humidity	≤ 95 % at 55 °C acc. to EN 60068-2
Vibration test	acc. to IEC 60068-2-6
Shock test	acc. to IEC 60068-2-27
EMC	acc. to EN 61326-1 (2006) acc. to NAMUR NE21 (2007)
MTTF	77 years acc. to SN 29500 (Ed. 99) 40 °C

Mechanical data

Housing material	plastic
Connection mode	module, plugged on rack
Protection class	IP20
Dimensions	18 x 118 x 103 mm

Approval | Certification	ATEX, $_cFM_{us}$, TR CU, CMI, INMETRO, GL, DNV, BV, LR

Input module, analog, passive, 4-channel

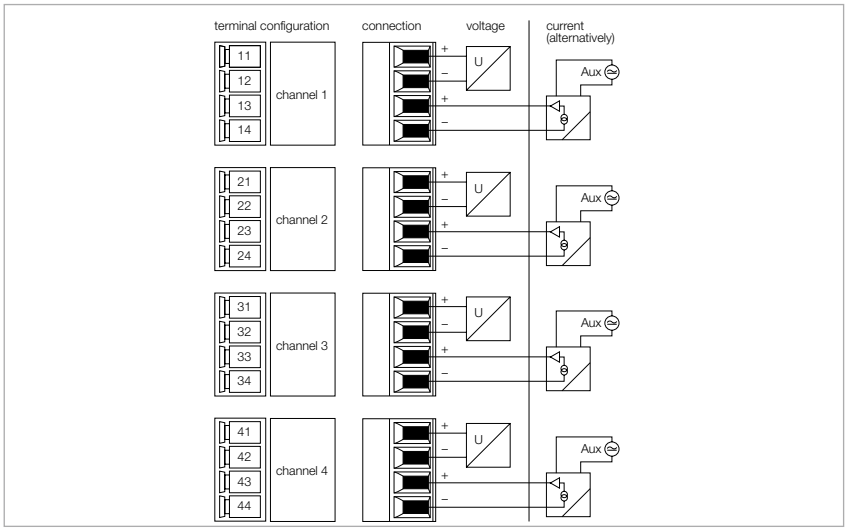

Features

- Input module for the connection of active transmitters (passive inputs)
- Complete galvanic isolation

The input module AI41Ex is designed for the connection of 4-wire transducers (passive input = sink mode / transducer active).

The module features protection class Ex ib IIC and can be mounted in zone 1 in combination with *excom*®. The explosion protection category of the inputs is Ex ia IIC. The inputs are galvanically isolated from each other.

The resolution is 14 bit, i.e. the analog value between 0…21 mA is represented as a number between 0 and 16383. For clear reading, the digitized value is displayed in a range of 0…21000 and transmitted to the host system. For transmission to the host system, voltage is indicated as a value in a range between 0…10000.



Technical data

Type	AI41EX
Ident no.	6884020

Power supply	
Supply voltage	via the backplanes, central power supply
Power consumption	≤ 1 W
Galvanic separation	complete galvanic isolation acc. to EN 60079-11
Number of channels	4-channel

Inputs	
Input circuits	intrinsically safe acc. to EN 60079-11, 0/4…20 mA
Overload capability	> 22 mA
Low level control	< 3.6 mA
Short-circuit	< 5 V (only in live zero mode)
Wire-break	< 2 mA (only in live zero mode)

Response characteristic	
Resolution	14 Bit
Linearity deviation	≤ 0.1 % full scale
Temperature drift	≤ 0.005 % / K
Rise time/fall time	≤ 50 ms (10 … 90 %)

Approvals and declarations	
Ex approval acc. to conformity certificate	PTB 03 ATEX 2023
Device designation	Ⓔx II 2 (1GD) G Ex ib [ia] IIC T4
Max. values:	Terminal connection: 1+2
Max. output voltage U_o	≤ 6.6 V
Max. output current I_o	≤ 2.1 mA
Max. output power P_o	≤ 3.5 mW
Characteristic	linear

Internal inductance/capacitance L_i/C_i

L_i	negligibly small
C_i	negligibly small

External inductance/capacitance L_o/C_o

	IIC	IIB
L_o [mH]	C_o [µF]	C_o [µF]
2.0	2.0	11
1.0	2.3	12
0.5	2.7	15
0.2	3.3	19

Max. values:	Terminal connection: 3+4
Max. output voltage U_o	≤ 6.6 V
Max. output current I_o	≤ 2.1 mA
Max. output power P_o	≤ 3.5 mW
Characteristic	linear

Internal inductance/capacitance L_i/C_i

L_i	negligibly small
C_i	negligibly small

External inductance/capacitance L_o/C_o

	IIC	IIB
L_o [mH]	C_o [µF]	C_o [µF]
2.0	2.0	11
1.0	2.3	12
0.5	2.7	15
0.2	3.3	19

Indication	
Operational readiness	1 x green / red
State/ Fault	4 x red

Environmental Conditions	
Ambient temperature	-20…+60 °C
Relative humidity	≤ 95 % at 55 °C acc. to EN 60068-2
Vibration test	acc. to IEC 60068-2-6
Shock test	acc. to IEC 60068-2-27
EMC	acc. to EN 61326-1 (2006) acc. to NAMUR NE21 (2007)
MTTF	98 years acc. to SN 29500 (Ed. 99) 40 °C

Mechanical data	
Housing material	plastic
Connection mode	module, plugged on rack
Protection class	IP20
Dimensions	18 x 118 x 103 mm

Approval | Certification	ATEX, TR CU, CMI, INMETRO

Potentiometer module, 4-channel

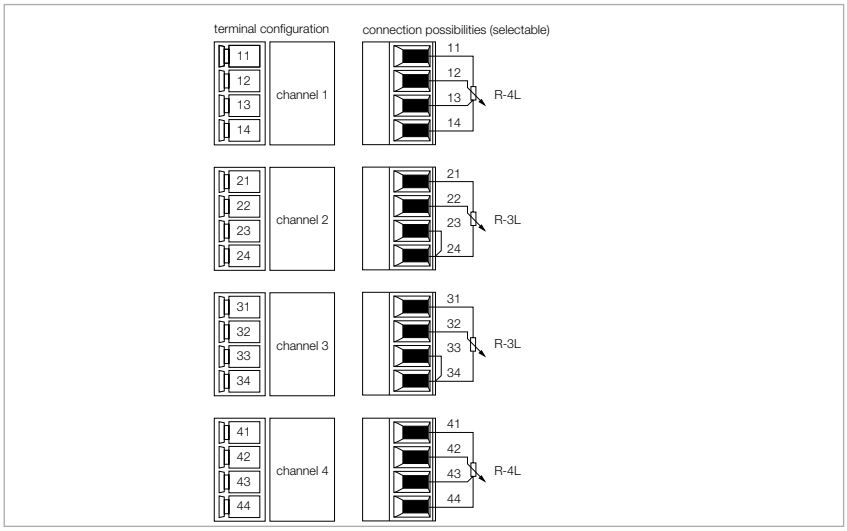

Features

- Input module for the connection of potentiometers
- Complete galvanic isolation

The analog input module AI43Ex is designed for the connection of potentiometers in 3 or 4-wire technology. If 3-wire potentiometers are used, the terminals at the module rack have to be bridged. Resistance measurements, i.e. the evaluation of potentiometers with a 2-wire connection, is not possible.

The module has four field circuits to control 3 or 4-wire potentiometers. The field circuits are galvanically isolated from the power supply, from the internal bus and from each other. The module features protection class Ex ib IIC and can be mounted in zone 1 in combination with *excom*®. The explosion protection category of the inputs is Ex ia IIC.

Each potentiometer input is monitored for wire break. The interruption of a single connection line is securely detected, as well as any combination of interruptions occuring at the four input connection lines. Short-circuit monitoring is not carried out. In case of a line error, the parametrized substitute value is immediately output and the output value is set to ‚invalid-bit'. This state is maintained until valid measured values are provided again.

The resolution is 14 bit. For clear reading, 0…100 % is digitized and displayed in a range of 0…10000 (independent of the parametrized measuring range) and transmitted to the host system.



Technical data

Type	AI43EX
Ident no.	6884137

Power supply	
Supply voltage	via the backplanes, central power supply
Power consumption	≤ 1.5 W
Galvanic separation	complete galvanic isolation acc. to EN 60079-11
Number of channels	4-channel

Inputs	
Input circuits	intrinsically safe acc. to EN 60079-11, potentiometer
Nominal resistance	400 Ω … 12 kΩ

Response characteristic	
Resolution	14 Bit
Linearity deviation	≤ 0.1 % full scale
Temperature drift	≤ 0.005 % / K
Rise time/fall time	≤ 50 ms (10 … 90 %)
Max. measurement tolerance under EMC influence	≤ 0.1 % with shielded signal cable ≤ 1 % with unshielded signal cable

Approvals and declarations	
Ex approval acc. to conformity certificate	PTB 06 ATEX 2026
Device designation	⟨Ex⟩ II 2 (1GD) G Ex ib [ia] IIC T4
Max. values:	Terminal connection: 1…4
Max. output voltage U_o	≤ 6.6 V
Max. output current I_o	≤ 25 mA
Max. output power P_o	≤ 42 mW
Characteristic	linear

Internal inductance/capacitance L_i/C_i

L_i	negligibly small
C_i	≤ 150 nF

External inductance/capacitance L_o/C_o

	IIC	IIB
L_o [mH]	C_o [µF]	C_o [µF]
5.0	1.6	8.5
1.0	2.2	12

Indication	
Operational readiness	1 x green / red
State/ Fault	4 x red

Environmental Conditions	
Ambient temperature	-20…+60 °C
Relative humidity	≤ 95 % at 55 °C acc. to EN 60068-2
Vibration test	acc. to IEC 60068-2-6
Shock test	acc. to IEC 60068-2-27
EMC	acc. to EN 61326-1 (2006) acc. to NAMUR NE21 (2007)
MTTF	71 years acc. to SN 29500 (Ed. 99) 40 °C

Mechanical data	
Housing material	plastic
Connection mode	module, plugged on rack
Protection class	IP20
Dimensions	18 x 118 x 103 mm

Approval | Certification	ATEX, TR CU, CMI, GL, DNV, BV, LR

Output module, analog, 4-channel

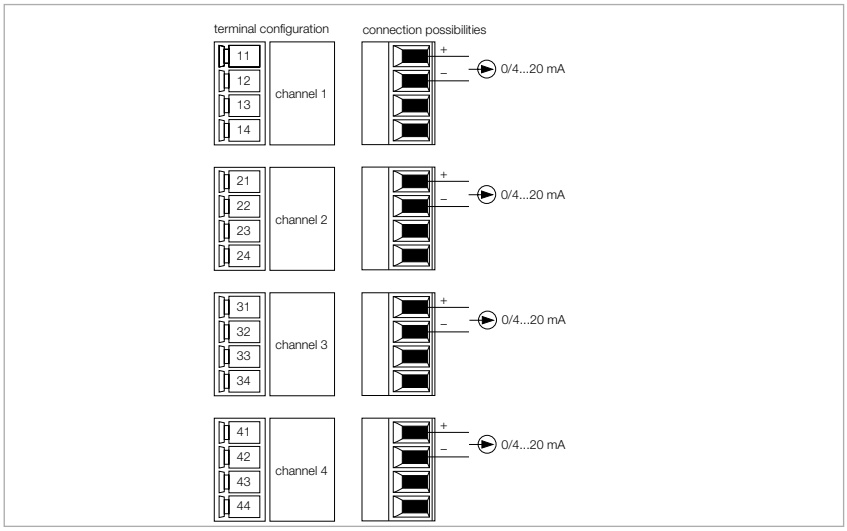

Features

- Output module for the connection of analog actuators
- Complete galvanic isolation

The output module AO401Ex is designed for the connection of intrinsically safe analog actuators such as control valves or process indicators.

The module features protection class Ex ib IIC and can be mounted in zone 1 in combination with *excom*®. The explosion protection category of the outputs is Ex ia IIC resp. Ex iaD. The outputs are galvanically isolated from each other.

HART® compatible transducers can be connected to the module. The field device can thus be parametrized directly at the terminals on the DIN rail with a licensed modem. An additional impedance in the circuit is not necessary.

The host system transmits a digitized control value 0…21000 (independent of the parametrized measuring range). This raw value is then transformed by the AO401Ex into a signal between 0…21 mA.



Technical data

Type	AO401Ex
Ident no.	6884205

Power supply

Supply voltage	via the backplanes, central power supply
Power consumption	≤ 2.2 W
Galvanic separation	complete galvanic isolation acc. to EN 60079-11
Number of channels	4-channel

Outputs

Output circuits	intrinsically safe acc. to EN 60079-11, 0/4…20 mA
No-load voltage	16 VDC
External load	≤ 640 Ω
Short circuit	< 50 Ω (only in live zero mode)
Wire-break	< 2 mA (only in live zero mode)

Response characteristic

Resolution	13 Bit
Linearity deviation	≤ 0.05 % full scale
Temperature drift	≤ 0.005 % / K
Rise time/fall time	≤ 50 ms (10 … 90 %)
Max. measurement tolerance under EMC influence	≤ 0.1 %

Approvals and declarations

Ex approval acc. to conformity certificate	PTB 00 ATEX 2179
Device designation	⟨Ex⟩ II 2 (1) G Ex ib [ia] IIC T4 ⟨Ex⟩ II (1) D [Ex iaD]
Max. values:	Terminal connection: 1+2
Max. output voltage U_o	≤ 18.9 V
Max. output current I_o	≤ 80 mA
Max. output power P_o	≤ 510 mW
Internal resistance R_i	334 Ω
Characteristic	trapezoidal

Internal inductance/capacitance L_i/C_i

L_i	negligibly small
C_i	negligibly small

External inductance/capacitance L_o/C_o

	IIC	IIB
L_o [mH]	C_o [µF]	C_o [µF]
2.0	0.12	1.00
1.0	0.12	1.00
0.5	0.14	1.00
0.2	0.18	1.20

Indication

Operational readiness	1 x green / red
State/ Fault	4 x red

Environmental Conditions

Ambient temperature	-20…+70 °C
Relative humidity	≤ 95 % at 55 °C acc. to EN 60068-2
Vibration test	acc. to IEC 60068-2-6
Shock test	acc. to IEC 60068-2-27
EMC	acc. to EN 61326-1 (2006) acc. to NAMUR NE21 (2007)
MTTF	78 years acc. to SN 29500 (Ed. 99) 40 °C

Mechanical data

Housing material	plastic
Connection mode	module, plugged on rack
Protection class	IP20
Dimensions	18 x 118 x 103 mm

Approval | Certification	ATEX, $_{c}FM_{us}$, TR CU, CMI, INMETRO, GL, DNV, BV, LR

Input module, analog, active, HART®, 4-channel

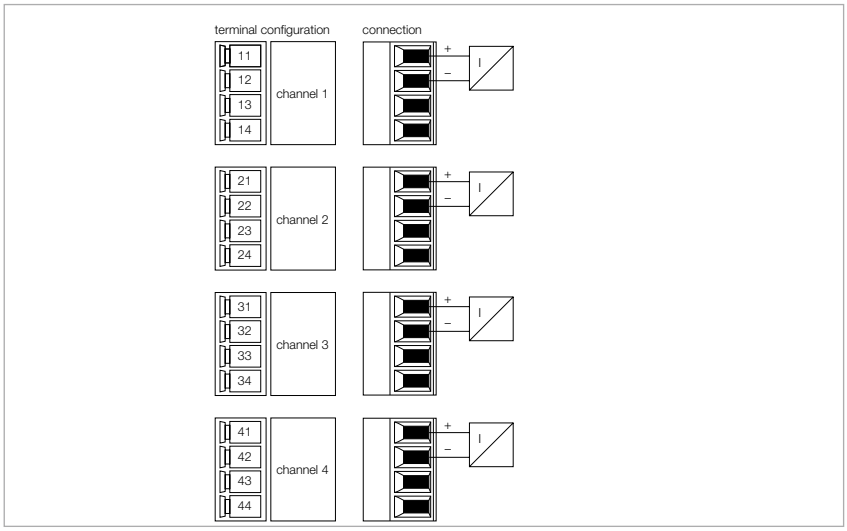

Features

- Input module for connection of 2-wire transmitters
- Transmission of HART® data

The input module AIH40Ex is designed for the connection of 2-wire transducers (active input = source mode/transducer passive).

The module features protection class Ex ib IIC and can be mounted in zone 1 in combination with *excom*®. The explosion protection category of the inputs is Ex ia IIC.

The inputs are not galvanically isolated from each other. When connecting the field devices, care has to be taken that all inputs are on a common potential.

HART® compatible sensors connected to the module communicate with the integrated HART® controller.

The resolution is 14 bit, i.e. the analog value between 0…21 mA is represented as a number between 0 and 16383. For clear reading, the digitized value is displayed in a range of 0…21000 and transmitted to the host system.

Up to 8 HART® variables (max. 4 per channel) can be read via the cyclical PROFIBUS data traffic. The bidirectional exchange of variables between the host system and the HART® transmitter is implemented via PROFIBUS-DPV1.

Parameters like wire-break or short-circuit monitoring, measuring range, HART® communication etc., can be adjusted for each channel separately and are solely initialized by the PROFIBUS master.



Technical data

Type	AIH40EX
Ident no.	6884001

Power supply

Supply voltage	via the backplanes, central power supply
Power consumption	≤ 3 W
Galvanic separation	to int. bus and supply circuit
Number of channels	4-channel

Inputs

Input circuits	intrinsically safe acc. to EN 60079-11, 0/4…20 mA
Supply voltage	15 VDC at 22 mA
HART® Impedance	> 240 Ω
Overload capability	> 22 mA
Low level control	< 3.6 mA
Short-circuit	< 5 V (only in live zero mode)
Wire-break	< 2 mA (only in live zero mode)

Response characteristic

Resolution	14 Bit
Linearity deviation	≤ 0.1 % full scale
Temperature drift	≤ 0.005 % / K
Rise time/fall time	≤ 50 ms (10 … 90 %)
Max. measurement tolerance under EMC influence	≤ 0.1 % with shielded signal cable ≤ 1 % with unshielded signal cable

Approvals and declarations

Ex approval acc. to conformity certificate	PTB 00 ATEX 2059 X
Device designation	⟨Ex⟩ II 2 (1) G Ex ib [ia] IIC T4 ⟨Ex⟩ II (1) D [Ex ia IIIC]
Max. values:	Terminal connection: 1+2
Max. output voltage U_o	≤ 22.1 V
Max. output current I_o	≤ 93 mA
Max. output power P_o	≤ 640 mW
Characteristic	trapezoidal

Internal inductance/capacitance L_i/C_i

L_i	≤ 0.22 mH
C_i	≤ 1.1 nF

External inductance/capacitance L_o/C_o

	IIC	IIB
L_o [mH]	0.5	2.0
C_o [nF]	65	270

Indication

Operational readiness	1 x green / red
State/ Fault	4 x red

Environmental Conditions

Ambient temperature	-20…+60 °C
Relative humidity	≤ 95 % at 55 °C acc. to EN 60068-2
Vibration test	acc. to IEC 60068-2-6
Shock test	acc. to IEC 60068-2-27
EMC	acc. to EN 61326-1 (2006) acc. to NAMUR NE21 (2007)
MTTF	61 years acc. to SN 29500 (Ed. 99) 40 °C

Mechanical data

Housing material	plastic
Connection mode	module, plugged on rack
Protection class	IP20
Dimensions	18 x 118 x 103 mm

Approval | Certification	ATEX, IECEx, $_cFM_{us}$, TR CU, CMI, KOSHA, NEPSI, INMETRO, GL, DNV, BV, LR

Input module, analog, passive, HART®, 4-channel

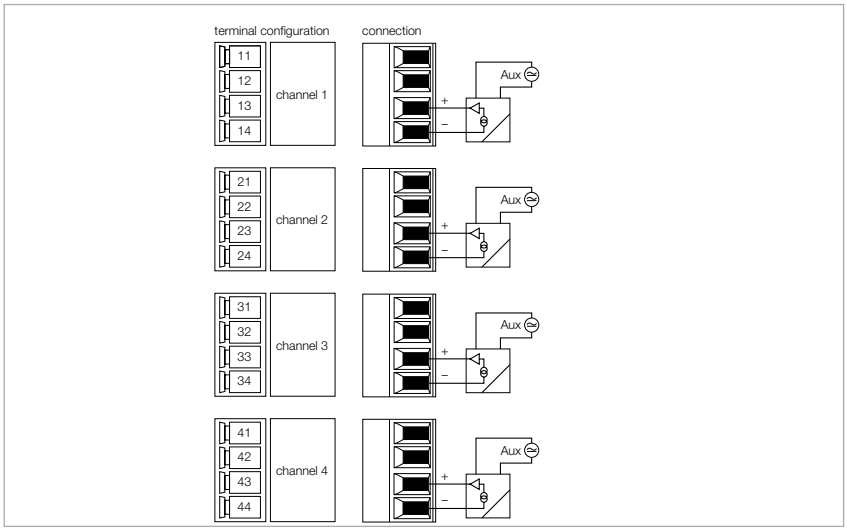

Features

- Input module for connection of 4-wire transmitters
- Transmission of HART® data

The input module AIH41Ex is designed for the connection of 4-wire transducers (passive input = sink mode / transducer active).

The module features protection class Ex ib IIC and can be mounted in zone 1 in combination with *excom*®. The explosion protection category of the inputs is Ex ia IIC.

The inputs are not galvanically isolated from each other. When connecting the field devices, care has to be taken that all inputs are on a common potential.

HART® compatible sensors connected to the module communicate with the HART® controller.

The resolution is 14 bit, i.e. the analog value between 0…21 mA is represented as a number between 0 and 16383. For clear reading, the digitized value is displayed in a range of 0…21000 and transmitted to the host system.

Up to 8 HART® variables (max. 4 per channel) can be read via the cyclical PROFIBUS data traffic. The bidirectional exchange of variables between the host system and the HART® transmitter is implemented via PROFIBUS-DPV1.

Parameters like wire-break or short-circuit monitoring, measuring range, HART® communication etc., can be adjusted for each channel separately and are solely initialized by the PROFIBUS master.



Technical data

Type	AIH41EX
Ident no.	6884005

Power supply

Supply voltage	via the backplanes, central power supply
Power consumption	≤ 1 W
Galvanic separation	to int. bus and supply circuit
Number of channels	4-channel

Inputs

Input circuits	intrinsically safe acc. to EN 60079-11, 0/4…20 mA
HART® Impedance	> 240 Ω
Overload capability	> 22 mA
Low level control	< 3.6 mA
Short-circuit	< 5 V (only in live zero mode)
Wire-break	< 2 mA (only in live zero mode)

Response characteristic

Resolution	14 Bit
Linearity deviation	≤ 0.1 % full scale
Temperature drift	≤ 0.005 % / K
Rise time/fall time	≤ 50 ms (10 … 90 %)
Max. measurement tolerance under EMC influence	≤ 0.1 % with shielded signal cable ≤ 1 % with unshielded signal cable

Approvals and declarations

Ex approval acc. to conformity certificate	PTB 00 ATEX 2059 X
Device designation	⟨Ex⟩ II 2 (1) G Ex ib [ia] IIC T4 ⟨Ex⟩ II (1) D [Ex ia IIIC]
Max. values:	Terminal connection: 3+4
Max. output voltage U_o	≤ 7.2 V
Max. output current I_o	≤ 16 mA
Max. output power P_o	≤ 29 mW
Characteristic	linear

Internal inductance/capacitance L_i/C_i

L_i	≤ 0.11 mH
C_i	≤ 1.1 nF

External inductance/capacitance L_o/C_o

	IIC	IIB
L_o [mH]	0.39	1.89
C_o [nF]	63.9	268

Indication

Operational readiness	1 x green / red
State/ Fault	4 x red

Environmental Conditions

Ambient temperature	-20…+60 °C
Relative humidity	≤ 95 % at 55 °C acc. to EN 60068-2
Vibration test	acc. to IEC 60068-2-6
Shock test	acc. to IEC 60068-2-27
EMC	acc. to EN 61326-1 (2006) acc. to NAMUR NE21 (2007)
MTTF	93 years acc. to SN 29500 (Ed. 99) 40 °C

Mechanical data

Housing material	plastic
Connection mode	module, plugged on rack
Protection class	IP20
Dimensions	18 x 118 x 103 mm

Approval | Certification	ATEX, IECEx, $_cFM_{us}$, TR CU, CMI, KOSHA, INMETRO, GL, DNV, BV, LR

Output module, analog, HART®, 4-channel

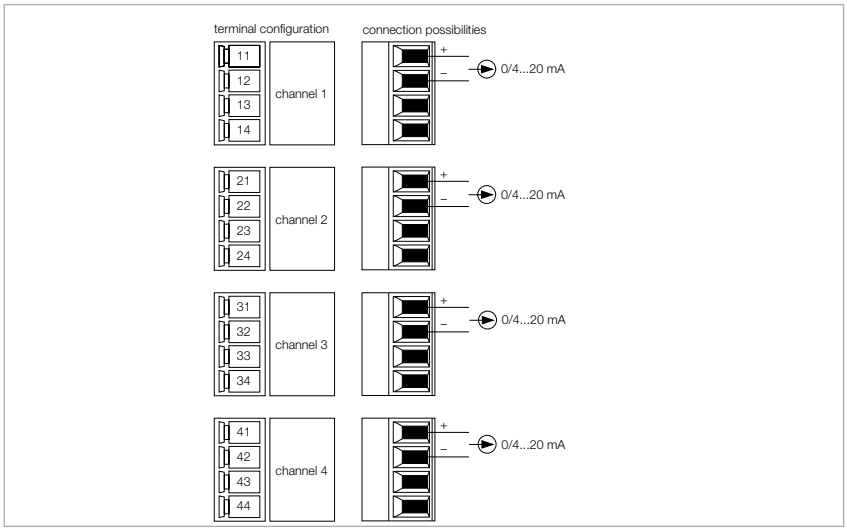

Features

- Output module for the connection of analog actuators
- Transmission of HART® data

The output module AOH40Ex is designed for the connection of intrinsically safe analog actuators such as control valves or process indicators.

The module features protection class Ex ib IIC and can be mounted in zone 1 in combination with *excom*®. Explosion protection category is Ex ia IIC.

The outputs are not galvanically isolated from each other. When connecting the field devices, care has to be taken that all outputs are on a common potential.

HART® compatible actuators connected to the module communicate directly with the HART® controller.

The resolution is 13 bit, i.e. the analog value of 0…21 mA is represented as a number between 0 and 8191. For easier operation, the host system operates in a value range between 0…21000. This raw value is reduced by the AOH40EX to a 13-bit resolution.

Parameters such as line monitoring, substitute values etc. can be adjusted for each channel separately and are initialized solely by the master.



Technical data

Type	AOH40EX
Ident no.	6884003

Power supply

Supply voltage	via the backplanes, central power supply
Power consumption	≤ 3 W
Galvanic separation	to int. bus and supply circuit
Number of channels	4-channel

Outputs

Output circuits	intrinsically safe acc. to EN 60079-11, 0/4…20 mA
No-load voltage	16 VDC
HART® Impedance	> 240 Ω
External load	≤ 600 Ω
Short circuit	< 50 Ω (only in live zero mode)
Wire-break	> 15 V (only in live zero mode)

Response characteristic

Resolution	13 Bit
Linearity deviation	≤ 0.1 % full scale
Temperature drift	≤ 0.005 % / K
Rise time/fall time	≤ 50 ms (10 … 90 %)
Max. measurement tolerance under EMC influence	≤ 0.1 % with shielded signal cable ≤ 1 % with unshielded signal cable

Approvals and declarations

Ex approval acc. to conformity certificate	PTB 02 ATEX 2051
Device designation	⟨Ex⟩ II 2 (1) G Ex ib [ia] IIC T4 ⟨Ex⟩ II (1) D [Ex ia IIIC]
Max. values:	Terminal connection: 1+2
Max. output voltage U_o	≤ 22.1 V
Max. output current I_o	≤ 93 mA
Max. output power P_o	≤ 640 mW
Characteristic	trapezoidal

Internal inductance/capacitance L_i/C_i

L_i	≤ 0.22 mH
C_i	≤ 1.1 nF

External inductance/capacitance L_o/C_o

	IIC	IIB
L_o [mH]	0.5	2.0
C_o [nF]	65	270

Indication

Operational readiness	1 x green / red
State/ Fault	4 x red

Environmental Conditions

Ambient temperature	-20…+60 °C
Relative humidity	≤ 95 % at 55 °C acc. to EN 60068-2
Vibration test	acc. to IEC 60068-2-6
Shock test	acc. to IEC 60068-2-27
EMC	acc. to EN 61326-1 (2006) acc. to NAMUR NE21 (2007)
MTTF	66 years acc. to SN 29500 (Ed. 99) 40 °C

Mechanical data

Housing material	plastic
Connection mode	module, plugged on rack
Protection class	IP20
Dimensions	18 x 118 x 103 mm

Approval | Certification	ATEX, IECEx, TR CU, CMI, KOSHA, NEPSI, INMETRO, GL, DNV, BV, LR

Input module, temperature, 4-channel

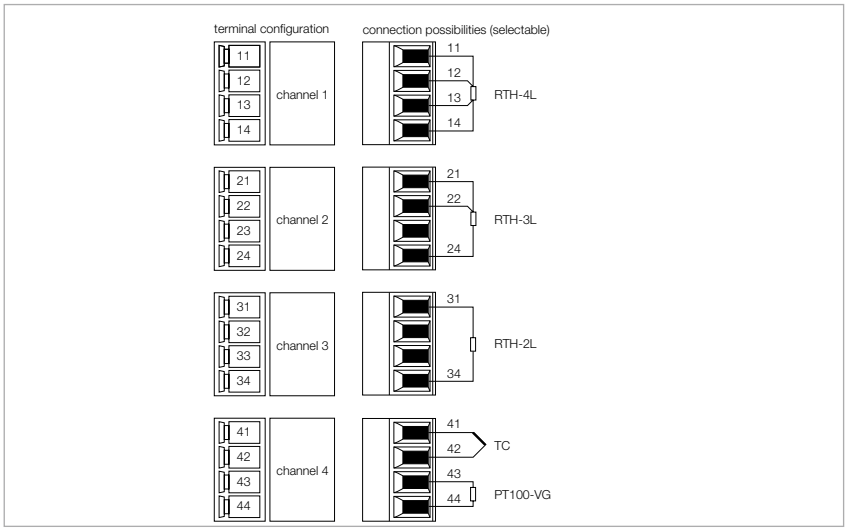

Features

- Input module for the connection of temperature probes
- Complete galvanic isolation

The input module TI40Ex is designed for the connection of 2, 3 and 4-wire temperature probes of the types Pt100, Pt200, Pt500, Pt1000, Ni100 and CU100, as well as for the connection of thermocouples of the types B, E, D, J, K, L, N, R, S, T and U. The module can also be used for the measurement of low voltages (-75…+75 mV, -1.2…+1.2 V) and resistance measurements (0…30 Ω, 0…300 Ω, 0…3 kΩ)

The module features protection class Ex ib IIC and can be mounted in zone 1 in combination with *excom*®. The explosion protection category of the inputs is Ex ia IIC.

Line compensation of 2-wire temperature resistors is done by means of parametrized resistance values. These values have to be determined first through measurements.

When using thermocouples, external cold junction compensation can be carried out separately for each channel by connecting resistors such as the Pt100 to the two unused terminals. Internal compensation instead is parametrized for all channels via an integrated PT100 resistor.

The internal resolution is 16 bit, the analog value is represented as a number between 0 and 32767 on the PROFIBUS-DP. The temperature is indicated in Kelvin. For conversion to °C, please observe an offset of 273.2.

Parameters such as line monitoring, substitute values etc. can be adjusted for each channel separately and are initialized solely by the master.



Technical data

Type	TI40Ex
Ident no.	6884000

Power supply

Supply voltage	via module rack, central power supply module
Power consumption	≤ 1 W
Galvanic separation	complete galvanic isolation acc. to EN 60079-11
Number of channels	4-channel

Inputs

Input circuits	intrinsically safe acc. to EN 60079-11, Cu100, Ni 100, Pt100, Pt200, Pt500, Pt1000, thermocouple

Response characteristic

Resolution	16 Bit
Linearity deviation	≤ 0.05 % measuring range
Temperature drift	≤ 0.005 % / K
Rise time/fall time	≤ 1.3 s (10 … 90 %)
Max. measurement tolerance under EMC influence	≤ 0.1 % with shielded signal cable ≤ 1 % with unshielded signal cable

Approvals and declarations

Ex approval acc. to conformity certificate	PTB 00 ATEX 2181
Device designation	⟨Ex⟩ II 2 (1) G Ex ib [ia] IIC T4 ⟨Ex⟩ II (1) D [Ex ia IIIC]
Max. values:	passive transducer connection
Max. output voltage U_o	≤ 5.5 V
Max. output current I_o	≤ 25 mA
Max. output power P_o	≤ 35 mW
Characteristic	linear

Internal inductance/capacitance L_i/C_i

L_i	negligibly small
C_i	≤ 60.0 nF

External inductance/capacitance L_o/C_o

	IIC	IIB
L_o [mH]	C_o [µF]	C_o [µF]
2.0	2.6	15
1.0	2.9	17
0.5	3.6	21
0.2	4.5	27

Max. values:	Active transducer connection:
Max. output voltage U_o	≤ 1.2 V
Max. output current I_o	≤ 50 mA
Max. output power P_o	≤ 60 mW
Characteristic	rectangular

Internal inductance/capacitance L_i/C_i

L_i	negligibly small
C_i	negligibly small

External inductance/capacitance L_o/C_o

	IIC	IIB
L_o [mH]	C_o [µF]	C_o [µF]
2.0	1.6	9.8
1.0	1.9	12
0.5	2.3	14
0.2	3.0	19

Indication

Operational readiness	1 x green / red
State/ Fault	4 x red

Environmental Conditions

Ambient temperature	-20…+60 °C
Relative humidity	≤ 95 % at 55 °C acc. to EN 60068-2
Vibration test	acc. to IEC 60068-2-6
Shock test	acc. to IEC 60068-2-27
EMC	acc. to EN 61326-1 (2006) acc. to NAMUR NE21 (2007)
MTTF	62 years acc. to SN 29500 (Ed. 99) 40 °C

Mechanical data

Housing material	plastic
Connection mode	module, plugged on rack
Protection class	IP20
Dimensions	18 x 118 x 103 mm

Approval | Certification	ATEX, IECEx, $_cFM_{us}$, TR CU, CMI, KOSHA, NEPSI, INMETRO, GL, DNV, BV, LR

Input module, temperature, 4-channel

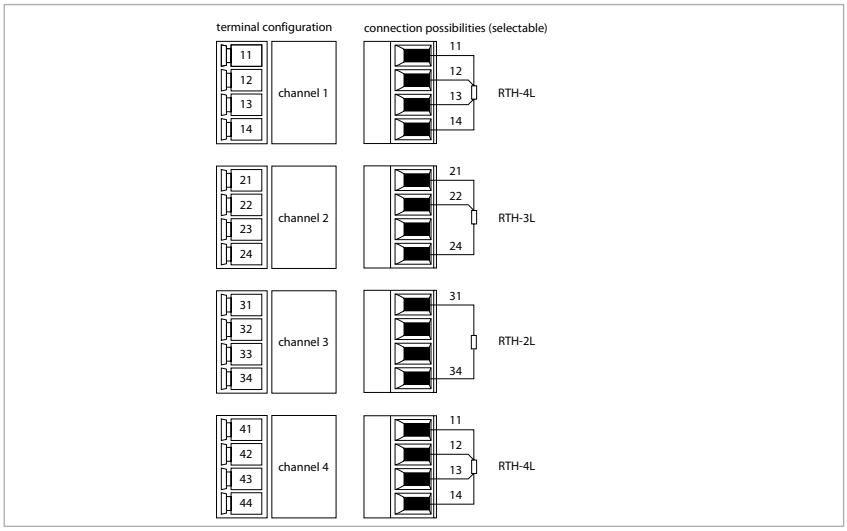

Features

- Input module for the connection of RTDs (resistance thermo detectors)
- Complete galvanic isolation

The input module TI41Ex is designed for the connection of the 2, 3 and 4-wire temperature probes Pt100, Ni100 and CU100.

The module features protection class Ex ib IIC and can be mounted in zone 1 in combination with *excom*®. The explosion protection category of the inputs is Ex ia IIC.

Line compensation of 2-wire temperature resistors is done by means of parametrized resistance values. These values have to be determined first through measurements.

The analog resistance value is digitized to 16-bit. The temperature is given in Kelvin, the resolution in 0.1 K steps. For conversion to °C, please observe an offset of 273.2.

Parameters such as line monitoring, substitute values etc. can be adjusted for each channel separately and are initialized solely by the master.



Technical data

Type	TI41Ex
Ident no.	6884190

Power supply

Supply voltage	via module rack, central power supply module
Power consumption	≤ 1 W
Galvanic separation	complete galvanic isolation acc. to EN 60079-11
Number of channels	4-channel

Inputs

Input circuits	intrinsically safe acc. to EN 60079-11, Cu100, Ni 100, Pt100

Response characteristic

Resolution	16 Bit
Linearity deviation	≤ 0.01 % measuring range
Temperature drift	≤ 0.002 % / K
Rise time/fall time	≤ 50 ms (10 … 90 %)
Max. measurement tolerance under EMC influence	≤ 0.1 % with shielded signal cable ≤ 0.5 % with unshielded signal cable

Approvals and declarations

Ex approval acc. to conformity certificate	PTB 13 ATEX 2014
Device designation	⟨Ex⟩ II 2 (1) G Ex ib [ia] IIC T4 ⟨Ex⟩ II (1) D [Ex ia] IIIC
Max. values:	passive transducer connection
Max. output voltage U_o	≤ 5.3 V
Max. output current I_o	≤ 4.5 mA
Max. output power P_o	≤ 6 mW
Characteristic	linear

Internal inductance/capacitance L_i/C_i

L_i	≤ 2.0 mH
C_i	≤ 1.0 µF

External inductance/capacitance L_o/C_o

	IIC	IIB
L_o [mH]	C_o [µF]	C_o [µF]
3.0	1.6	12
2.0	2.0	15
1.0	2.5	18
0.5	3.0	22
0.2	4.0	29
0.1	5.1	37

Indication

Operational readiness	1 x green / red
State/ Fault	4 x red

Environmental Conditions

Ambient temperature	-20…+70 °C
Relative humidity	≤ 95 % at 55 °C acc. to EN 60068-2
Vibration test	acc. to IEC 60068-2-6
Shock test	acc. to IEC 60068-2-27

EMC	acc. to EN 61326-1 (2006) acc. to NAMUR NE21 (2007)
MTTF	80 years acc. to SN 29500 (Ed. 99) 40 °C

Mechanical data

Housing material	plastic
Connection mode	module, plugged on rack
Protection class	IP20
Dimensions	18 x 118 x 103 mm

Approval | Certification	ATEX, GL, DNV, BV, LR

PROFIBUS-DP interface

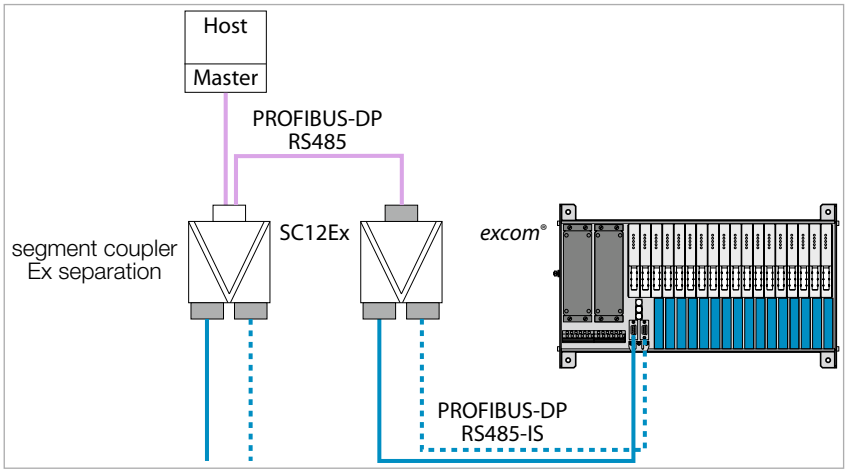

Features

- Intrinsically safe gateway for PROFIBUS-DPV1
- Connection of the *excom*® station to the PROFIBUS-DP networks
- Baud rate max. 1.5 Mbps
- PROFIBUS interface acc. to PROFIBUS user organization (PNO) with RS485-IS layer

The GDP-IS gateway serves to connect the *excom*® system to PROFIBUS-DP networks. Connection to the PROFIBUS-DP is established via optical fibers or copper cables. When using optical fibers for data transmission an optocoupler pair must be installed between wired and optical PROFIBUS which also adapts the level to the IS layer. When using copper cables a segment coupler (RS485-IS coupler) must be installed to ensure explosion protection.

The gateway can be operated at a maximum transmission rate of 1500 kbps. The bus is connected to a standard miniature SUB-D slot on the module rack.

A GSD file containing all configuration files and parameter sets is available for system configuration. When connected to suitable host systems, you can change the system configuration during operation.

The gateway provides the entire range of PROFIBUS diagnostic functions including port-related diagnostics. Additionally, manufacturer-specific error codes are generated. For example HART® communication errors, power supply errors, planning errors as well as information on simulators, internal communication and redundancy status.

Redundancy: The use of two gateways and two bus cables ensures error-free communication, in case one gateway or one bus line may fail. If one gateway fails, the other takes over smoothly, this is called line redundancy. System redundancy (two masters, each connected to a gateway) is also supported.

Recommended wiring components:
- PROFIBUS-DP cable, type 452B
- D9T-RS485IS male
- Segment coupler SC12Ex
- Fiber-optic coupler OC11Ex/…



Technical data

Type	GDP-IS/FW2.2
Ident no.	6884210

Power supply	
Supply voltage	via module rack, central power supply module
Power consumption	≤ 1 W
Galvanic separation	complete galvanic isolation acc. to EN 60079-11

System data	
Fieldbus transmission rate	9.6 kbps … 1.5 Mbps
Fieldbus address range	1…99

Approvals and declarations	
Ex approval acc. to conformity certificate	PTB 09 ATEX 2013
Device designation	⟨Ex⟩ II 2 G Ex ib IIC T4
Max. values:	RS485-IS fieldbus connection
Max. output voltage U_o	≤ 3.6 V
Max. output current I_o	≤ 125 mA
Max. output power P_o	≤ 112.5 mW
Characteristic	linear
Max. input voltage U_i	≤ 4.2 V

External RS485 fieldbus system:
Protection type Ex ib IIC
Highest value of each terminal pair: $U_i = 4.2$ V
Highest value of the terminal pairs: $\sum I_i = 4.8$ A
Cables type A resp. B acc. to EN 60079-25 with the following assignments:
L'/R' ≤ 15 µH/Ω
C' ≤ 250 nF/km
Ø lead ≥ 0.2 mm
massed inductances and capacitances in the external fieldbus system are **not** permitted

Indication	
Operational readiness	1 x green / red
Int. communication (CAN)	1 x yellow / red
Ext. Communication (PDP)	1 x yellow / red
Redundancy readiness (PRIO)	1 x yellow / red
Error indication	1 x red

Environmental Conditions	
Ambient temperature	-20…+70 °C
Relative humidity	≤ 95 % at 55 °C acc. to EN 60068-2
Vibration test	acc. to IEC 60068-2-6
Shock test	acc. to IEC 60068-2-27
EMC	acc. to EN 61326-1 (2006) acc. to NAMUR NE21 (2007)
MTTF	126 years acc. to SN 29500 (Ed. 99) 40 °C

Mechanical data	
Housing material	plastic
Connection mode	module, plugged on rack
Protection class	IP20
Dimensions	18 x 118 x 103 mm

Approval | Certification	ATEX, IECEx, $_cFM_{us}$, TR CU, KOSHA, INMETRO, GL, DNV, BV, LR

PROFIBUS-DP interface

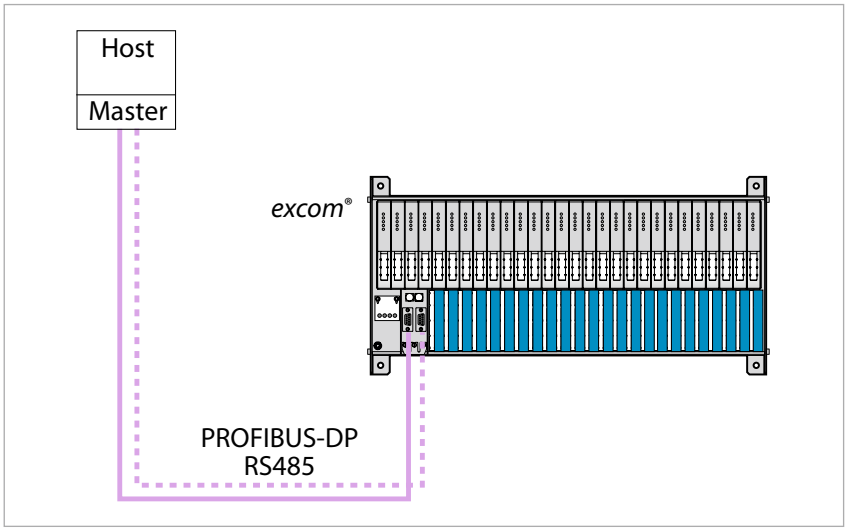

Features

- Gateway for PROFIBUS-DPV1 communication
- Connection of the *excom*® station to the PROFIBUS-DP networks
- Baud rate max. 1.5 Mbps
- PROFIBUS interface acc. to PROFIBUS user organization (PNO)

The GDP-NI gateway serves to connect the *excom*® system to PROFIBUS-DP networks. Connection to the PROFIBUS-DP is established via optical fibers or copper cables. When using optical fibers for data transmission, an optocoupler pair must be installed between wired and optical PROFIBUS.

The gateway can be operated at a maximum transmission rate of 1500 kbps. The bus is connected to a standard miniature SUB-D slot on the module rack.

A GSD file containing all configuration files and parameter sets is available for system configuration. When connected to suitable host systems, you can change the system configuration during operation.

The gateway provides the entire range of PROFIBUS diagnostic functions including port-related diagnostics. Additionally, manufacturer-specific error codes are generated. For example HART® communication errors, power supply errors, planning errors as well as information on simulators, internal communication and redundancy status.

Redundancy: The use of two gateways and two bus cables ensures error-free communication, in case one gateway or one bus line may fail. If one gateway fails, the other takes over smoothly, this is called line redundancy. System redundancy (two masters, each connected to a gateway) is also supported.

Recommended wiring components:
- PROFIBUS-DP cable, type 452
- D9T-RS485 male



Technical data

Type	GDP-NI/FW2.2
Ident no.	6884225
Power supply	
Supply voltage	via module rack, central power supply module
Power consumption	≤ 1 W
Galvanic separation	complete galvanic isolation
System data	
Fieldbus transmission rate	9.6 kbps … 1.5 Mbps
Fieldbus address range	1…99
Approvals and declarations	
Ex approval acc. to conformity certificate	PTB 13 ATEX 2013 X
Device designation	Ex II (2) G [Ex ib] IIC
Indication	
Operational readiness	1 x green / red
Int. communication (CAN)	1 x yellow / red
Ext. Communication (PDP)	1 x yellow / red
Redundancy readiness (PRIO)	1 x yellow / red
Error indication	1 x red
Environmental Conditions	
Ambient temperature	-20…+70 °C
Relative humidity	≤ 95 % at 55 °C acc. to EN 60068-2
Vibration test	acc. to IEC 60068-2-6
Shock test	acc. to IEC 60068-2-27
EMC	acc. to EN 61326-1 (2006) acc. to NAMUR NE21 (2007)
MTTF	acc. to SN 29500 (Ed. 99) 40 °C
Mechanical data	
Housing material	plastic
Connection mode	module, plugged on rack
Protection class	IP20
Dimensions	18 x 118 x 103 mm
Approval | Certification	ATEX

Power supply module, 24 VDC, zone 1

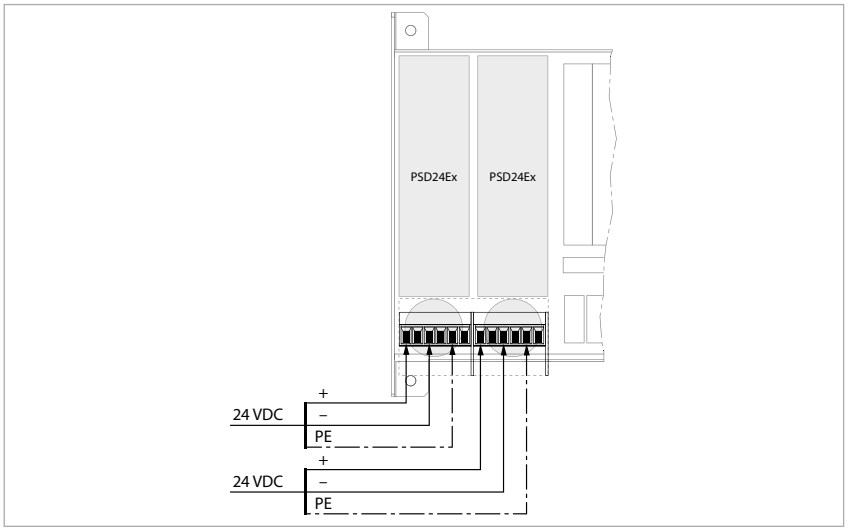

Features

- DC power supply module, supplies a fully assembled module rack in zone 1

The PSD24Ex module supplies the *excom*® system with power to the full extension. The module rack is designed in a combined protection rating of Ex m, Ex e and Ex i and can therefore be used in zone 1. It is also fully potted and installed in a die-cast aluminium enclosure.

The module is powered with 24 VDC. The external power supply is plugged on the module rack via Ex e clamps. Any contact with the clamps under power should be avoided. The clamps are located under a closure cap. Interventions are only allowed after switching off the respective supply voltage.

Redundancy: Two power supply modules can be installed together with an appropriate module rack. In case of power cut or failure of one device, the second unit provides the power for the whole system. Different potentials can be supplied.



Technical data

Type	PSD24EX
Ident no.	6881721
Power supply	
Nominal voltage	24 VDC
Operating voltage range	19.2…32 VDC
Power consumption	≤ 66.5 W
Output power	≤ 60 W
Galvanic separation	Galvanically isolated input and output circuit, rated voltage 60 V
Approvals and declarations	
Ex approval acc. to conformity certificate	PTB 00 ATEX 2193
Device designation	Ex II 2 G Ex eb mb [ib] IIC T4
Indication	
Operational readiness	1 x green
Supply voltage	1 x green
Environmental Conditions	
Ambient temperature	-20…+70 °C
Relative humidity	≤ 95 % at 55 °C acc. to EN 60068-2
Vibration test	acc. to IEC 60068-2-6
Shock test	acc. to IEC 60068-2-27
EMC	acc. to EN 61326-1 (2006) acc. to NAMUR NE21 (2007)
MTTF	78 years acc. to SN 29500 (Ed. 99) 40 °C
Mechanical data	
Electrical connection	via backplane
Terminal cross-section	2.5 mm² flexible / 4.0 mm² rigid
Housing material	Aluminium
Connection mode	Flange, 4 x M4 screws
Protection class	IP50
Dimensions	45 x 155 x 106 mm
Approval | Certification	ATEX, IECEx, cFMus, TR CU, KOSHA, NEPSI, INMETRO, GL, DNV, BV, LR

Converter, 230 VAC

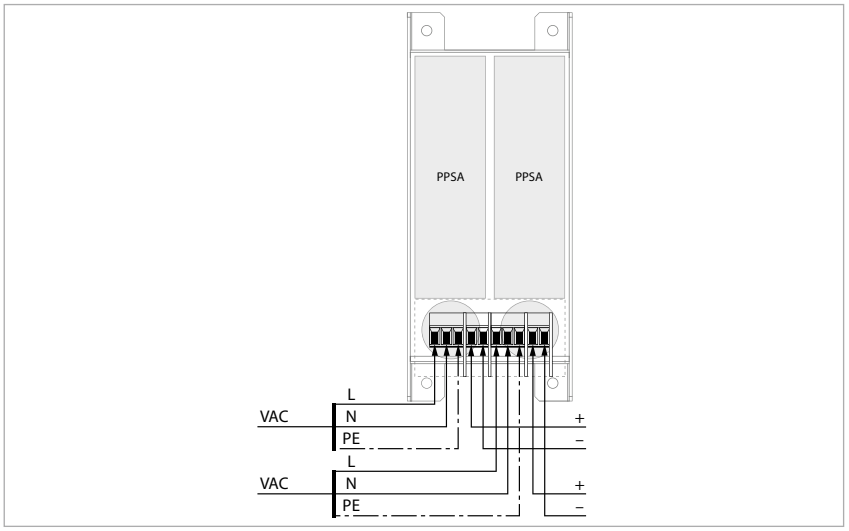

Features

- AC/DC converter for AC supply of DC power supply module

The AC/DC converter PPSA230Ex supplies the *excom*® system with power to the full extension. A combined protection rating of Ex m and Ex e enables application in zone 1. It is also fully potted and installed in a die-cast aluminium enclosure.

The module is powered with 230 VAC. The external power supply is plugged on the module rack via Ex e clamps. Any contact with the clamps under power should be avoided. The clamps are located under a closure cap. Interventions are only allowed after switching off the respective supply voltage.

Redundancy: Two power supply modules can be installed together with an appropriate module rack. In case of power cut or failure of one device, the second unit provides the power for the whole system. Different potentials can be supplied.



Technical data

Type	PPSA230EX
Ident no.	6900293
Power supply	
Nominal voltage	230 VAC
Operating voltage range	200…250 VAC
Power consumption	≤ 85 VA
Output power	≤ 66.5 W
Galvanic separation	Galvanically isolated input and output circuit, rated voltage 250 V
Approvals and declarations	
Ex approval acc. to conformity certificate	PTB 04 ATEX 2047
Device designation	⟨Ex⟩ II 2 G Ex e m IIC T4
Environmental Conditions	
Ambient temperature	-20…+70 °C
Relative humidity	≤ 95 % at 55 °C acc. to EN 60068-2
Vibration test	acc. to IEC 60068-2-6
Shock test	acc. to IEC 60068-2-27
EMC	acc. to EN 61326-1 (2006) acc. to NAMUR NE21 (2007)
MTTF	919 years acc. to SN 29500 (Ed. 99) 40 °C
Mechanical data	
Electrical connection	via backplane
Terminal cross-section	2.5 mm² flexible / 4.0 mm² rigid
Housing material	Aluminium
Connection mode	Flange, 4 x M4 screws (Torx)
Protection class	IP50
Dimensions	45 x 155 x 106 mm
Approval | Certification	ATEX, TR CU, INMETRO

Converter, 115 VAC

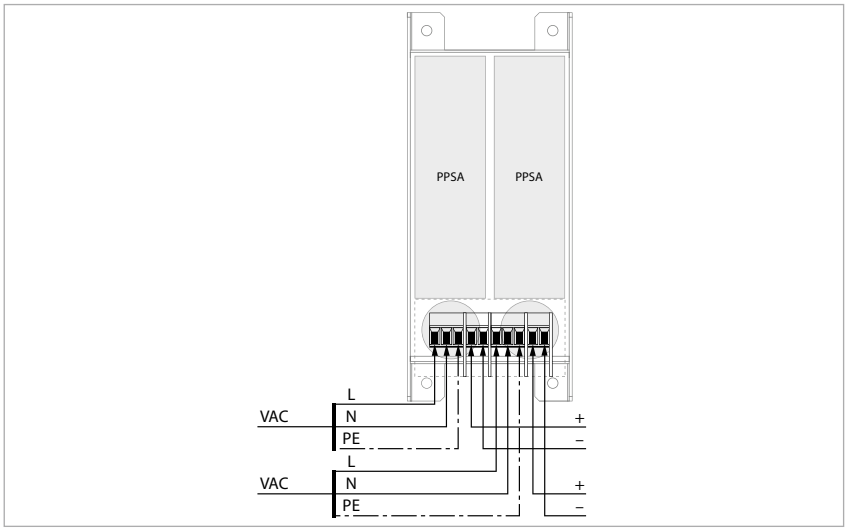

Features

- AC/DC converter for AC supply of DC power supply module

The AC/DC converter PPSA115Ex supplies the *excom*® system with power to the full extension. A combined protection rating of Ex m and Ex e enables application in zone 1. It is also fully potted and installed in a die-cast aluminium enclosure.

The module is powered with 115 VAC. The external power supply is plugged on the module rack via Ex e clamps. Any contact with the clamps under power should be avoided. The clamps are located under a closure cap. Interventions are only allowed after switching off the respective supply voltage.

Redundancy: Two power supply modules can be installed together with an appropriate module rack. In case of power cut or failure of one device, the second unit provides the power for the whole system. Different potentials can be supplied.



Technical data

Type	PPSA115EX
Ident no.	6900294
Power supply	
Nominal voltage	115 VAC
Operating voltage range	100…125 VAC
Power consumption	≤ 85 VA
Output power	≤ 66.5 W
Galvanic separation	Galvanically isolated input and output circuit, rated voltage 250 V
Approvals and declarations	
Ex approval acc. to conformity certificate	PTB 04 ATEX 2047
Device designation	II 2 G Ex e m IIC T4
Environmental Conditions	
Ambient temperature	-20…+70 °C
Relative humidity	≤ 95 % at 55 °C acc. to EN 60068-2
Vibration test	acc. to IEC 60068-2-6
Shock test	acc. to IEC 60068-2-27
EMC	acc. to EN 61326-1 (2006) acc. to NAMUR NE21 (2007)
MTTF	829 years acc. to SN 29500 (Ed. 99) 40 °C
Mechanical data	
Electrical connection	via backplane
Terminal cross-section	2.5 mm² flexible / 4.0 mm² rigid
Housing material	Aluminium
Connection mode	Flange, 4 x M4 screws (Torx)
Protection class	IP50
Dimensions	45 x 155 x 106 mm
Approval | Certification	ATEX, TR CU, INMETRO

Power supply module, 24 VDC, zone 2

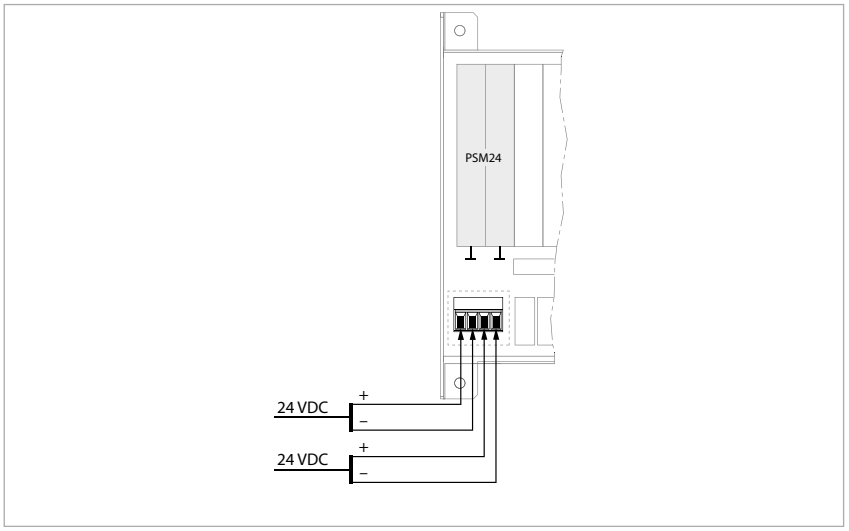

Features

- DC power supply module, supplies a fully assembled module rack in zone 2

The PSM24-3G module supplies the *excom*® system with power to the full extension. The power supply module can be used in zone 2.
The module is powered with 24 VDC. The external power supply is plugged on the module rack via Ex e clamps. The clamps are located under a closure cap. Any contact with the clamps under power should be avoided. Interventions are only allowed after switching off the respective supply voltage.

Redundancy: Two power supply modules can be installed together with an appropriate module rack. In case of power cut or failure of one device, the second unit provides the power for the whole system. Different potentials can be supplied.



Technical data

Type	PSM24-3G
Ident no.	6881722
Power supply	
Nominal voltage	24 VDC
Operating voltage range	19.2…32 VDC
Power consumption	≤ 66.5 W
Output power	≤ 60 W
Galvanic separation	Galvanically isolated input and output circuit, rated voltage 40 V
Approvals and declarations	
Ex approval acc. to conformity certificate	PTB 12 ATEX 2009
Device designation	II 3 (2) G Ex nAc ic [ib] IIC T4
Indication	
Operational readiness	1 x green
Error indication	1 x red
Environmental Conditions	
Ambient temperature	-20…+70 °C
Relative humidity	≤ 95 % at 55 °C acc. to EN 60068-2
Vibration test	acc. to IEC 60068-2-6
Shock test	acc. to IEC 60068-2-27
EMC	acc. to EN 61326-1 (2006) acc. to NAMUR NE21 (2007)
MTTF	61 years acc. to SN 29500 (Ed. 99) 40 °C
Mechanical data	
Electrical connection	via backplane
Terminal cross-section	2.5 mm² flexible / 4.0 mm² rigid
Housing material	plastic
Connection mode	module, plugged on rack
Protection class	IP20
Dimensions	18 x 118 x 103 mm
Approval | Certification	ATEX, TR CU, INMETRO

Upstream subrack for PPSA

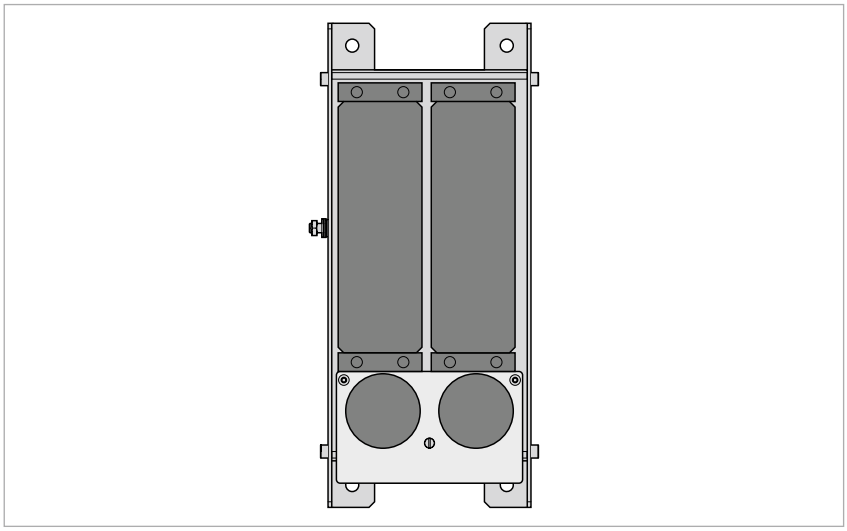

Features

- Upstream connected subrack for up to 2 AC/DC converters

The module rack MT-PPS consists of a backplane and the actual rack system. It can accommodate two AC converters for the supply of downstream connected 24 VDC module racks.

To plug and unplug AC converters power has to be switched off first. (Do not work on connecting terminals prior to removing the AC converters).

The module rack is designed in a combined protection rating of Ex e and Ex q and can therefore be used in zone 1.

The rack system is made of continuously cast aluminium. This ensures increased stability and shielding. The module rack is suited for wall mounting and fits in the system enclosures.

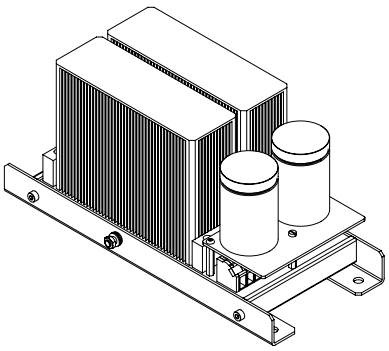

Technical data

Type	MT-PPS
Ident no.	9100516
Ports	
AC converter	2
Approvals and declarations	
Ex approval acc. to conformity certificate	PTB 04 ATEX 2091 X
Device designation	II 2 G Ex eb IIC T4
Environmental Conditions	
Ambient temperature	-20…+70 °C
Relative humidity	≤ 95 % at 55 °C acc. to EN 60068-2
Vibration test	acc. to IEC 60068-2-6
Shock test	acc. to IEC 60068-2-27
EMC	acc. to EN 61326-1 (2006) acc. to NAMUR NE21 (2007)
MTTF	1211 years acc. to SN 29500 (Ed. 99) 40 °C
Mechanical data	
Housing material	continuously cast aluminium
Connection mode	wall mounting
Protection class	IP20
Dimensions	110 x 260 x 130 mm

Module rack, zone 1, for 8 modules

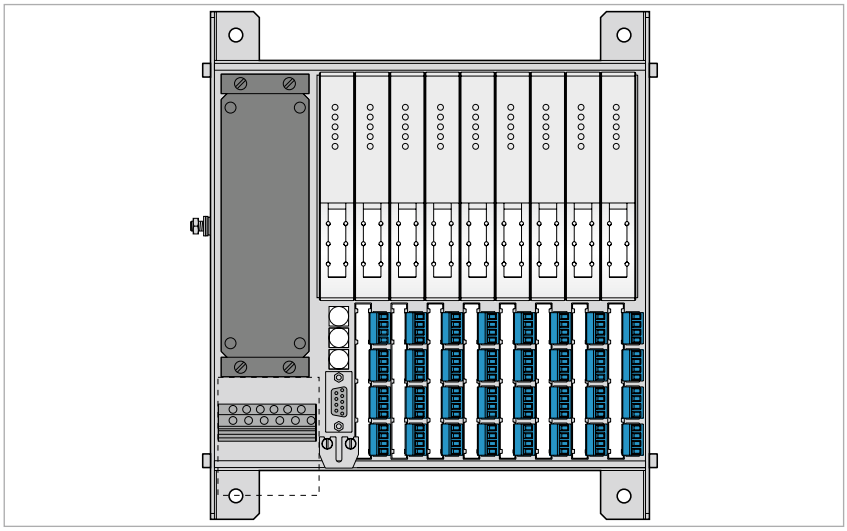

Features

- Module rack for max. 8 I/O modules, 1 gateway and 1 power supply module
- The terminals for the signal connection level are available as accessories

The module rack MT08-2G consists of a backplane and the actual rack system. It can accommodate a gateway, a power supply unit as well as 8 I/O modules. Up to 64 binary inputs/outputs or 32 analog inputs/outputs resp. a mix of both can be connected to it. Unlike the MT16, neither gateways nor power supply units can be connected redundantly to the MT08.

All modules can be plugged and unplugged under power without interrupting the data transmission.

The module rack is designed in a combined protection rating of Ex e and Ex i and can therefore be used in zone 1.

The power supply of modules on the backplane is limited to prevent sparking.

This allows you to pull and plug modules in powered state with *excom*® mounted in zone 1.

The rack system is made of continuously cast aluminium. This ensures increased stability and shielding. The module rack is suited for wall and 19“ rack mounting.

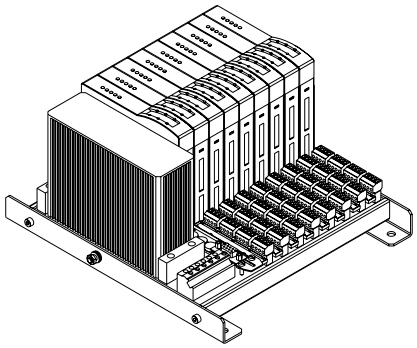

Technical data

Type	MT08-2G
Ident no.	9100684
System data	
Fieldbus addressing	3 x decimal-coded rotary switches
Fieldbus connection technology	1 x 9-pin D-SUB
Ports	
DC power supply	1
Gateway	1
Block I/O	8
Approvals and declarations	
Ex approval acc. to conformity certificate	PTB 00 ATEX 2194 U
Device designation	Ⓔx II 2 (1) G Ex eb ib [ia] IIC T4
Environmental Conditions	
Ambient temperature	-20…+70 °C
Relative humidity	≤ 95 % at 55 °C acc. to EN 60068-2
Vibration test	acc. to IEC 60068-2-6
Shock test	acc. to IEC 60068-2-27
EMC	acc. to EN 61326-1 (2006) acc. to NAMUR NE21 (2007)
MTTF	1211 years acc. to SN 29500 (Ed. 99) 40 °C
Mechanical data	
Electrical connection	4 x 4 clamps per module
Terminal cross-section	1.5 mm²
Housing material	continuously cast aluminium
Connection mode	wall mounting
Protection class	IP20
Dimensions	227 x 260 x 130 mm
Approval | Certification	ATEX

Module rack, zone 1, for 16 modules

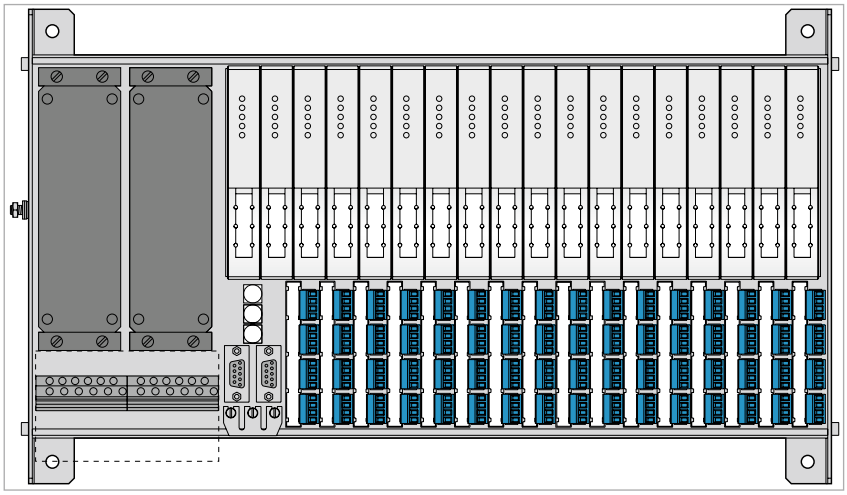

Features

- Module rack for max. 16 I/O modules, 2 gateways and 2 power supply modules
- The terminals for the signal connection level are available as accessories

The module rack MT16-2G consists of a backplane and the actual rack system. It can accommodate 2 gateways, 2 power supply units as well as 16 I/O modules. Up to 128 binary inputs/outputs or 64 analog inputs/outputs resp. a mix of both can be connected to it.

All modules can be plugged and unplugged under power without interrupting the data transmission. The same applies to redundant gateways and power supply modules.

The module rack is designed in a combined protection rating of Ex e and Ex i and can therefore be used in zone 1.

The power supply of modules on the backplane is limited to prevent sparking. This allows you to pull and plug modules in powered state with *excom*® mounted in zone 1.

The rack system is made of continuously cast aluminium. This ensures increased stability and shielding. The module rack is suited for wall and 19“ rack mounting.

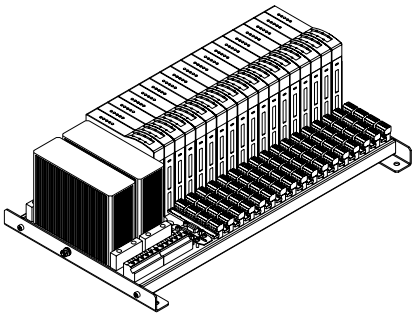

Technical data

Type	MT16-2G
Ident no.	9100687
System data	
Fieldbus addressing	3 x decimal-coded rotary switches
Fieldbus connection technology	2 x 9-pin D-SUB
Ports	
DC power supply	2
Gateway	2
Block I/O	16
Approvals and declarations	
Ex approval acc. to conformity certificate	PTB 00 ATEX 2194 U
Device designation	Ⓔx II 2 (1) G Ex eb ib [ia] IIC T4
Environmental Conditions	
Ambient temperature	-20…+70 °C
Relative humidity	≤ 95 % at 55 °C acc. to EN 60068-2
Vibration test	acc. to IEC 60068-2-6
Shock test	acc. to IEC 60068-2-27
EMC	acc. to EN 61326-1 (2006) acc. to NAMUR NE21 (2007)
MTTF	1211 years acc. to SN 29500 (Ed. 99) 40 °C
Mechanical data	
Electrical connection	4 x 4 clamps per module
Terminal cross-section	1.5 mm²
Housing material	continuously cast aluminium
Connection mode	wall mounting
Protection class	IP20
Dimensions	440 x 260 x 130 mm
Approval | Certification	ATEX

Module rack, zone 1, for 16 Modules, marine ship approved

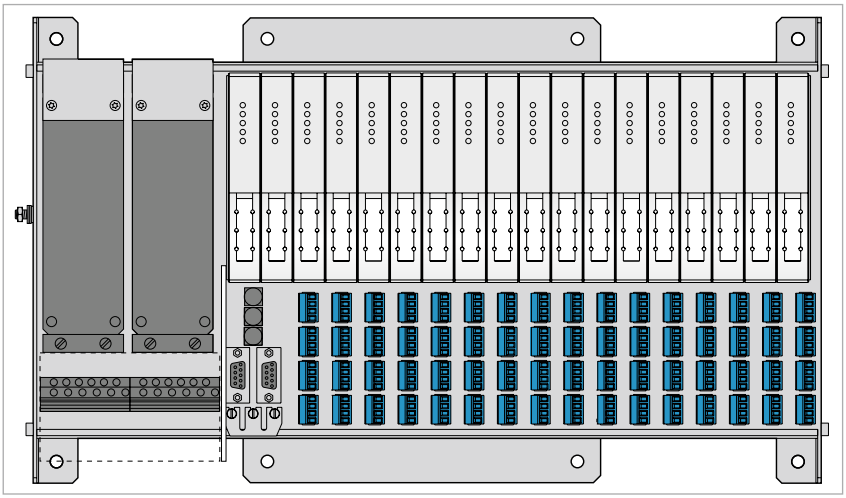

Features

- Module rack for max. 16 I/O modules, 2 gateways and 2 power supply modules
- The terminals for the signal connection level are available as accessories
- Module rack approved for maritime applications (certification according to GL, DNV, BV and LR)

The module rack MT16-2G/MSA consists of a backplane and the actual rack system. It can accommodate 2 gateways, 2 power supply units as well as 16 I/O modules. Up to 128 binary inputs/outputs or 64 analog inputs/outputs resp. a mix of both can be connected to it.

All modules can be plugged and unplugged under power without interrupting the data transmission. The same applies to redundant gateways and power supply modules.

The module rack is designed in a combined protection rating of Ex e and Ex i and can therefore be used in zone 1.

The power supply of modules on the backplane is limited to prevent sparking. This allows you to pull and plug modules in powered state with *excom*® mounted in zone 1.

The rack system is made of continuously cast aluminium. This ensures increased stability and shielding. The module rack is suited for wall and 19“ rack mounting.

The module rack MT16-2G/MSA is especially adapted to the requirements for maritime applications. It is certified acc. to the ship classes GL, DNV, BV and LR.

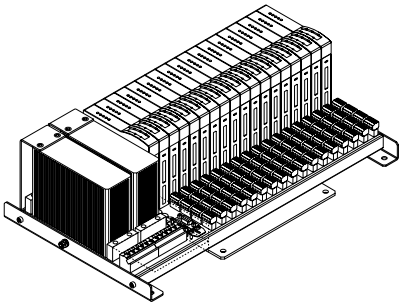

Technical data

Type	MT16-2G/MSA
Ident no.	9100688
System data	
Fieldbus addressing	3 x decimal-coded rotary switches
Fieldbus connection technology	2 x 9-pin D-SUB
Ports	
DC power supply	2
Gateway	2
Block I/O	16
Approvals and declarations	
Ex approval acc. to conformity certificate	PTB 00 ATEX 2194 U
Device designation	Ex II 2 (1) G Ex eb ib [ia] IIC T4
Environmental Conditions	
Ambient temperature	-20…+70 °C
Relative humidity	≤ 95 % at 55 °C acc. to EN 60068-2
Vibration test	acc. to IEC 60068-2-6
Shock test	acc. to IEC 60068-2-27
EMC	acc. to EN 61326-1 (2006) acc. to NAMUR NE21 (2007)
MTTF	acc. to SN 29500 (Ed. 99) 40 °C
Mechanical data	
Electrical connection	4 x 4 clamps per module
Terminal cross-section	1.5 mm²
Housing material	continuously cast aluminium
Connection mode	wall mounting
Protection class	IP20
Dimensions	440 x 260 x 130 mm
Approval | Certification	ATEX, GL, DNV, BV, LR

Module rack for 8 modules, zone 2

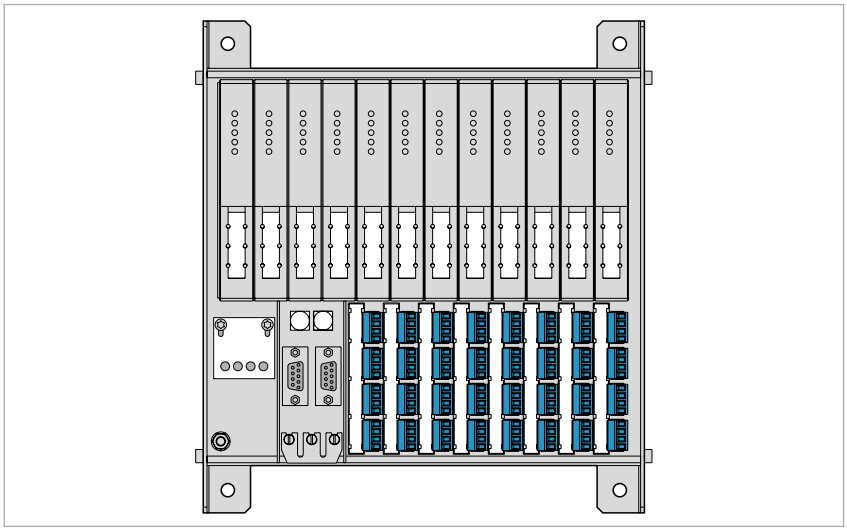

Features

- Module rack for max. 8 I/O modules, 2 gateways and 2 power supply modules
- Terminals for signal connection level available as accessories

The module rack MT08-3G consists of a backplane and the actual rack system. It can accommodate a gateway, a power supply unit as well as 8 I/O modules. Up to 64 binary inputs/outputs or 32 analog inputs/outputs resp. a mix of both can be connected to it.

All modules can be plugged and unplugged under power without interrupting the data transmission. The same applies to redundant gateways and power supply modules.

The module rack is designed in a combined protection rating of Ex e and Ex i and can therefore be used in zone 2.

The power supply of modules on the backplane is limited to prevent sparking. This allows you to pull and plug modules in powered state with *excom*® mounted in zone 2.

The rack system is made of continuously cast aluminium. This ensures increased stability and shielding. The module rack is suited for wall and rack mounting.

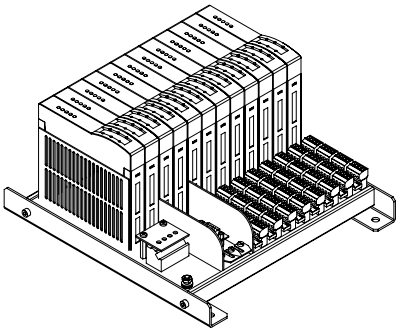

Technical data

Type	MT08-3G
Ident no.	9100680
System data	
Fieldbus addressing	2 x decimal-coded rotary switches
Fieldbus connection technology	2 x 9-pin D-SUB
Ports	
DC power supply	2
Gateway	2
Block I/O	8
Approvals and declarations	
Ex approval acc. to conformity certificate	PTB 00 ATEX 2194 U
Device designation	Ex II 3 (1) G Ex nAc ib ic [ia] IIC T4
Environmental Conditions	
Ambient temperature	-20…+70 °C
Relative humidity	≤ 95 % at 55 °C acc. to EN 60068-2
Vibration test	acc. to IEC 60068-2-6
Shock test	acc. to IEC 60068-2-27
EMC	acc. to EN 61326-1 (2006) acc. to NAMUR NE21 (2007)
MTTF	acc. to SN 29500 (Ed. 99) 40 °C
Mechanical data	
Electrical connection	4 x 4 clamps per module
Terminal cross-section	1.5 mm²
Housing material	continuously cast aluminium
Connection mode	wall mounting
Protection class	IP20
Dimensions	235 x 260 x 130 mm
Approval | Certification	ATEX

Module rack for 16 modules, zone 2

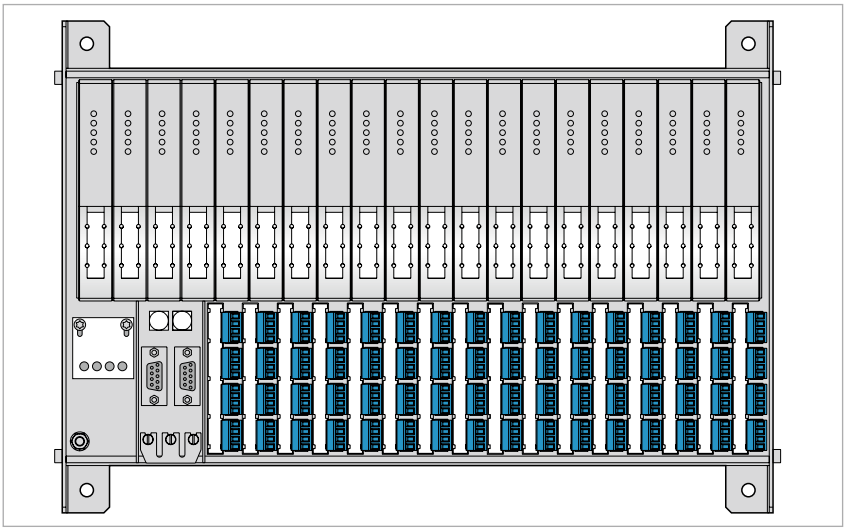

Features

- Module rack for max. 16 I/O modules, 2 gateways and 2 power supply modules
- The terminals for the signal connection level are available as accessories

The module rack MT16-3G consists of a backplane and the actual rack system. It can accommodate 2 gateways, 2 power supply units as well as 16 I/O modules. Up to 128 binary inputs/outputs or 64 analog inputs/outputs resp. a mix of both can be connected to it.

All modules can be plugged and unplugged under power without interrupting the data transmission. The same applies to redundant gateways and power supply modules.

The module rack is designed in a combined protection rating of Ex e and Ex i and can therefore be used in zone 2.

The power supply of modules on the backplane is limited to prevent sparking. This allows you to pull and plug modules in powered state with *excom*® mounted in zone 2.

The rack system is made of continuously cast aluminium. This ensures increased stability and shielding. The module rack is suited for wall and rack mounting.

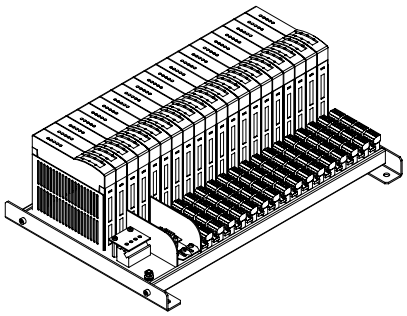

Technical data

Type	MT16-3G
Ident no.	9100681
System data	
Fieldbus addressing	2 x decimal-coded rotary switches
Fieldbus connection technology	2 x 9-pin D-SUB
Ports	
DC power supply	2
Gateway	2
Block I/O	16
Approvals and declarations	
Ex approval acc. to conformity certificate	PTB 00 ATEX 2194 U
Device designation	Ex II 3 (1) G Ex nAc ib ic [ia] IIC T4
Environmental Conditions	
Ambient temperature	-20…+70 °C
Relative humidity	≤ 95 % at 55 °C acc. to EN 60068-2
Vibration test	acc. to IEC 60068-2-6
Shock test	acc. to IEC 60068-2-27
EMC	acc. to EN 61326-1 (2006) acc. to NAMUR NE21 (2007)
MTTF	1211 years acc. to SN 29500 (Ed. 99) 40 °C
Mechanical data	
Electrical connection	4 x 4 clamps per module
Terminal cross-section	1.5 mm²
Housing material	continuously cast aluminium
Connection mode	wall mounting
Protection class	IP20
Dimensions	380 x 260 x 130 mm
Approval | Certification	ATEX, IECEx, INMETRO

Module rack for 24 modules, zone 2



Features

- Module rack for max. 24 I/O modules, 2 gateways and 2 power supply modules
- The terminals for the signal connection level are available as accessories

The module rack MT24-3G consists of a backplane and the actual rack system. It can accommodate 2 gateways, 2 power supply units as well as 24 I/O modules. Up to 192 binary inputs/outputs or 96 analog inputs/outputs resp. a mix of both can be connected to it.

All modules can be plugged and unplugged under power without interrupting the data transmission. The same applies to redundant gateways and power supply modules.

The module rack is designed in a combined protection rating of Ex e and Ex i and can therefore be used in zone 2.

The power supply of modules on the backplane is limited to prevent sparking. This allows you to pull and plug modules in powered state with *excom*® mounted in zone 2.

The rack system is made of continuously cast aluminium. This ensures increased stability and shielding. The module rack is suited for wall and rack mounting.

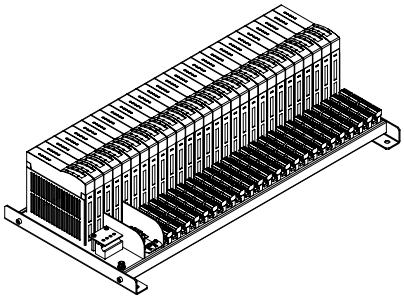

Technical data

Type	MT24-3G
Ident no.	9100682
System data	
Fieldbus addressing	2 x decimal-coded rotary switches
Fieldbus connection technology	2 x 9-pin D-SUB
Ports	
DC power supply	2
Gateway	2
Block I/O	24
Approvals and declarations	
Ex approval acc. to conformity certificate	PTB 00 ATEX 2194 U
Device designation	Ex II 3 (1) G Ex nAc ib ic [ia] IIC T4
Environmental Conditions	
Ambient temperature	-20…+70 °C
Relative humidity	≤ 95 % at 55 °C acc. to EN 60068-2
Vibration test	acc. to IEC 60068-2-6
Shock test	acc. to IEC 60068-2-27
EMC	acc. to EN 61326-1 (2006) acc. to NAMUR NE21 (2007)
MTTF	1211 years acc. to SN 29500 (Ed. 99) 40 °C
Mechanical data	
Electrical connection	4 x 4 clamps per module
Terminal cross-section	1.5 mm²
Housing material	continuously cast aluminium
Connection mode	wall mounting
Protection class	IP20
Dimensions	525 x 260 x 130 mm
Approval | Certification	ATEX, IECEx, INMETRO

PROFIBUS-DP segment coupler

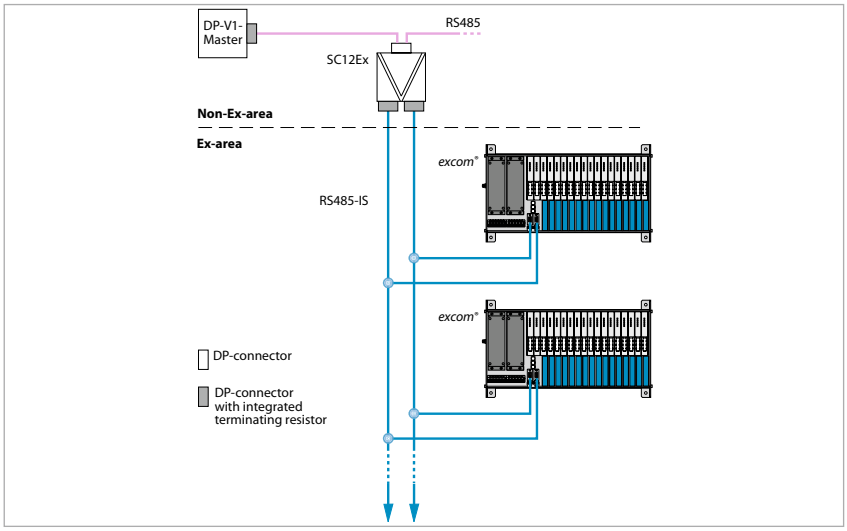

Features

- Device for intrinsically safe separation of RS485 and RS485-IS
- Connection of max. 62 bus nodes (31 in redundant mode)
- Redundant power supply
- Automatic baud rate detection

The PROFIBUS-DP segment coupler SC12Ex from TURCK has been developed for intrinsically safe PROFIBUS connection.

Equipped with one RS485 and two RS485-IS interfaces, this coupler is suited for many Ex-area applications. The RS485-IS interface is entirely realized according to the PNO PROFIBUS guideline. The coupler can thus supply both lines of the TURCK Ex-Remote-I/O system *excom*® simultaneously (line redundancy). Just one device is required for Ex-separation and line redundancy.

The segment coupler SC12Ex is IP20 rated, suited for mounting in the non-Ex area and can be supplied redundantly. Both power supply inputs are decoupled by diods. The load distribution depends on the level of operating voltage. Operating voltage 18…32 VDC.

In switch position 0, the coupler identifies the baud rate automatically. For this, the start-delimiter of the PROFIBUS telegrams is evaluated. Three consecutive and valid start-delimiters have to be received before identification locks in.

All received telegrams are checked for plausibility by means of start-delimiter sequences. Baud rate detection is started after reset. If telegrams are not received within 1.7 seconds, baud rate search is activated. Alternatively, the baud rate used can be set via rotary switch.

In order not to limit the number of nodes and cable length of a PROFIBUS-DP segment, amplitude and phase are reproduced in the coupler. The user can choose between capacitive and direct earthing.



Technical data

Type	SC12EX
Ident no.	6884047
Power supply	
Nominal voltage	24 VDC
Operating voltage range	18…32 VDC
Current consumption	< 200 mA
Galvanic separation	complete galvanic isolation acc. to EN 60079-11
Number of channels	2-channel
Approvals and declarations	
Ex approval acc. to conformity certificate	PTB 03 ATEX 2115
Device designation	Ex II (2) GD [Ex ib] IIC
Max. values:	RS485-IS Sub-D connection
Max. output voltage U_o	≤ 3.71 V
Max. output current I_o	≤ 129 mA
Max. output power P_o	≤ 120 mW
Characteristic	linear
Max. input voltage U_i	≤ 4.2 V
Indication	
Operational readiness	2 x green
State/ Fault	3 x yellow / red
Baud rate detection	1 x yellow
Environmental Conditions	
Ambient temperature	-20…+70 °C
Relative humidity	≤ 95 % at 55 °C acc. to EN 60068-2
Vibration test	acc. to IEC 60068-2-6
Shock test	acc. to IEC 60068-2-27
EMC	acc. to EN 61326-1 (2006) acc. to NAMUR NE21 (2007)
MTTF	106 years acc. to SN 29500 (Ed. 99) 40 °C
Mechanical data	
Housing material	anodized aluminium
Connection mode	snap-fit on DIN rail (DIN 60715)
Front plate	FR4, grey / blue
Protection class	IP20
Dimensions	142 x 105.5 x 31 mm
Approval | Certification	ATEX, FM, TR CU, KOSHA, INMETRO, GL, DNV, BV, LR

PROFIBUS-DP optocoupler for zone 1

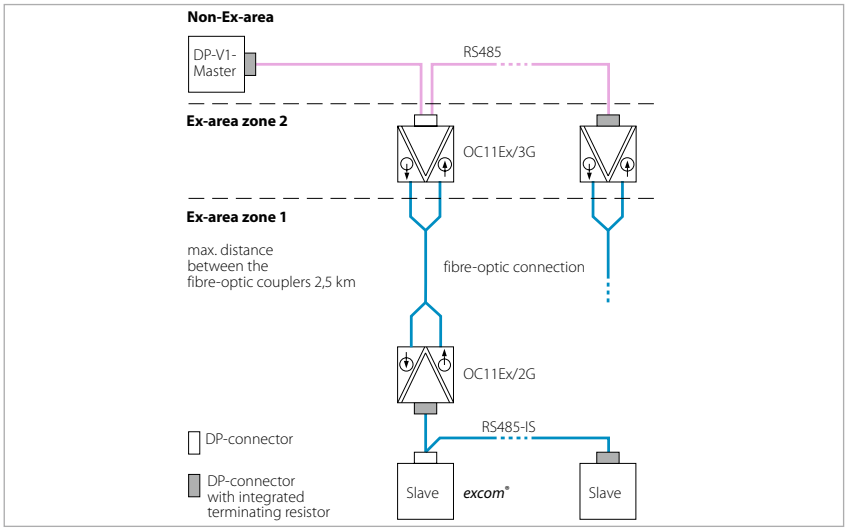

Features

- Device for data transmission between electrical and optical fieldbus circuits
- Power supply of max. 31 nodes
- Mounting in zone 1 possible
- Note: Idle level corresponds to active light!

The optocoupler OC11Ex/2G.2 converts the PROFIBUS-DP signals into optical signals. In this way the bus signals are transmitted potential-free and safely over long distances from the non-Ex to the Ex area.

The OC11Ex/3G.2 in zone 2 transmits the signals via the optical interface to the OC11Ex/2G.2 in zone 1 which converts them. The signals are then output intrinsically safe at the RS485-IS interface.

The RS485-IS interface is entirely realized according to the PNO PROFIBUS guideline. The optocoupler OC11Ex/2G.2 is equipped with

- intrinsically safe RS485-IS PROFIBUS interface (acc. to the RS485-IS draft worked out by the PNO work group)
- intrinsically safe optical interface with ST connectors for emitter and receiver

Up to 31 bus nodes can be connected to the optocoupler. Baud rates of 9.6 kbps up to 1.5 Mbps are possible, or will be automatically detected.

For diagnostic purposes there are four status LEDs that indicate power ON, fiber-optic segment, RS485 interface and baud rate. The device features an M8 communication interface. Two OC11Ex devices can be coupled together via the M8 interface. Wire-break and short-circuit are not transmitted from one segment to the next one. All segments can thus be operated trouble-free and independently of one another.

In order not to limit the number of nodes and cable length of a PROFIBUS-DP segment, amplitude and phase are reproduced in the coupler. The OC11Ex/2G.2 shield is always capacitively coupled to the equipotential bonding.



Technical data

Type	0C11Ex/2G.2
Ident no.	6890427
Power supply	
Nominal voltage	24 VDC
Operating voltage range	18…32 VDC
Current consumption	< 100 mA
Galvanic separation	complete galvanic isolation acc. to EN 60079-11
Number of channels	1-channel
Approvals and declarations	
Ex approval acc. to conformity certificate	PTB 05 ATEX 2051 X
Device designation	Ex II 2 G Ex e mb ib [ib op is] IIC T4
Max. values:	RS485-IS Sub-D connection
Max. output voltage U_o	≤ 3.64 V
Max. output current I_o	≤ 127 mA
Max. output power P_o	≤ 116 mW
Characteristic	linear
Max. input voltage U_i	≤ 4.2 V
Indication	
Operational readiness	1 x green
State/ Fault	2 x yellow / red
Baud rate detection	1 x yellow
Environmental Conditions	
Ambient temperature	-20…+70 °C
Relative humidity	≤ 95 % at 55 °C acc. to EN 60068-2
Vibration test	acc. to IEC 60068-2-6
Shock test	acc. to IEC 60068-2-27
EMC	acc. to EN 61326-1 (2006) acc. to NAMUR NE21 (2007)
MTTF	234 years acc. to SN 29500 (Ed. 99) 40 °C
Mechanical data	
Housing material	anodized aluminium
Connection mode	snap-fit on DIN rail (DIN 60715) or wall mounting
Front plate	FR4, grey
Protection class	IP20
Dimensions	72 x 105.5 x 31 mm
Approval | Certification	ATEX, TR CU, KOSHA, INMETRO, GL, DNV, BV, LR

PROFIBUS-DP optocoupler for zone 2

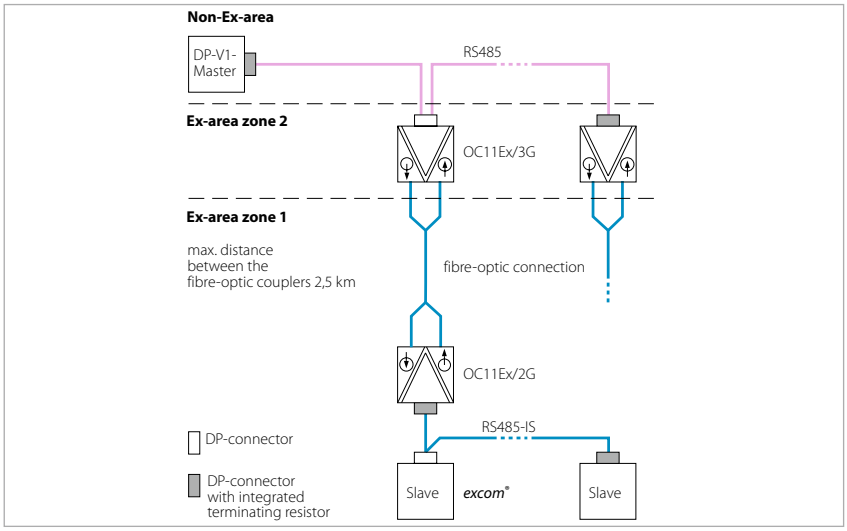

Features

- Device for data transmission between electrical and optical fieldbus circuits
- Power supply of max. 31 nodes
- Mounting in zone 2 possible
- Note: Idle level corresponds to active light!

The optocoupler OC11Ex/3G.2 converts the PROFIBUS-DP signals into optical signals. In this way the bus signals are transmitted potential-free and safely over long distances from the non-Ex to the Ex area.

The optocoupler can be installed in the non-Ex area or in zone 2. The OC11Ex/3G.2 receives the PROFIBUS-DP signals at its standard interface RS485 and transmits them via the intrinsically safe optical interface to the optocoupler OC11Ex/2G.2 in zone 1.

The optocoupler OC11Ex/3G.2 is equipped with

- RS485 interface – standard PROFIBUS-DP interface with RS485 level acc. to EIA 485 (the control cable for direction control is not connected)
- intrinsically safe optical interface with ST connectors for emitter and receiver

Up to 31 bus nodes can be connected to the optocoupler. Baud rates of 9.6 kbps up to 1.5 Mbps are possible or will be automatically detected.

For diagnostic purposes there are four status LEDs that indicate power ON, fiber-optic segment, RS485 interface and baud rate. The device features an M8 communication interface. Two OC11Ex devices can be coupled together via the M8 interface. Wire-break and short-circuit are not transmitted from one segment to the next one. All segments can thus be operated trouble-free and independently of one another.

In order not to limit the number of nodes and cable length of a PROFIBUS-DP segment, amplitude and phase are reproduced in the coupler. The user can choose between capacitive and direct earthing.



Technical data

Type	0C11Ex/3G.2
Ident no.	6890428
Power supply	
Nominal voltage	24 VDC
Operating voltage range	18…32 VDC
Current consumption	< 100 mA
Galvanic separation	complete galvanic isolation acc. to EN 60079-11
Number of channels	1-channel
Approvals and declarations	
Ex approval acc. to conformity certificate	PTB 05 ATEX 2052 X
Device designation	Ex II (2) G [Ex ib op is] IIC
Ex approval acc. to conformity certificate	PTB 05 ATEX 2053 X
Device marking	Ex II 3 G Ex nA II T4
Indication	
Operational readiness	1 x green
State/ Fault	2 x yellow / red
Baud rate detection	1 x yellow
Environmental Conditions	
Ambient temperature	-20…+70 °C
Relative humidity	≤ 95 % at 55 °C acc. to EN 60068-2
Vibration test	acc. to IEC 60068-2-6
Shock test	acc. to IEC 60068-2-27
EMC	acc. to EN 61326-1 (2006) acc. to NAMUR NE21 (2007)
MTTF	442 years acc. to SN 29500 (Ed. 99) 40 °C
Mechanical data	
Housing material	anodized aluminium
Connection mode	snap-fit on DIN rail (DIN 60715) or wall mounting
Front plate	FR4, grey
Protection class	IP20
Dimensions	72 x 105.5 x 31 mm
Approval | Certification	ATEX, TR CU, KOSHA, INMETRO, GL, DNV, BV, LR

Solutions for the non-Ex area



***excom*® – Solutions for the non-Ex area**

The *excom*® series gives the user complete freedom in the choice of the installation location. It can be installed in zones 1 and 2 and in the non-Ex area. This benefits the user not only in terms of components optimized for a particular zone, but also because of the standard concept for configuring and parametrizing the periphery and field instrumentation.
The same peripherals that are used in the Ex area can also be used in the non-Ex area. A new module rack offers here the possibility of operating up to 24 I/O modules in the non-Ex area, which further reduces the basic installation costs. As TURCK has also developed a special power supply unit for this application area, the entire system is considerably more compact. Even with exclusively non-Ex area applications, the user benefits from the further developments of the excom® series – particularly with the digital outputs: For example, an additional relay output is also provided that allows the switching of outputs with up to 0.5 A.

Type	Ident No.	Description	Page
DM80-N	6884211	I/O module, digital, 8-channel	248
DF20-N	6884212	Frequency module, 2-channel	250
DI40-N	6884213	Input module, digital, 4-channel	252
DO40-N	6884214	Output module, digital, 4-channel	254
DO60R-N	6884196	Relay module, 6-channel	256
AI40-N	6884215	Input module, analog, 4-channel	258
AI41-N	6884216	Input module, analog, passive, 4-channel	260
AI43-N	6884217	Potentiometer module, 4-channel	262
AO40-N	6884218	Output module, analog, 4-channel	264
AIH40-N	6884219	Input module, analog, active, HART®, 4-channel	266
AIH41-N	6884220	Input module, analog, passive, HART®, 4-channel	268
AOH40-N	6884221	Output module, analog, HART®, 4-channel	270
TI40-N	6884222	Input module, temperature, 4-channel	272
TI41-N	6884223	Input module, temperature, 4-channel	274
GDP-N /FW2.2	6884224	PROFIBUS-DP interface	276
PSM24-N	6881723	Power supply module, 24 VDC, non-Ex	278
MT08-N	9100689	Module rack, non-Ex, for 8 modules	280
MT16-N	9100686	Module rack, non-Ex, for 16 modules	282
MT24-N	9100683	Module rack, non-Ex, for 24 modules	284

I/O module, digital, 8-channel

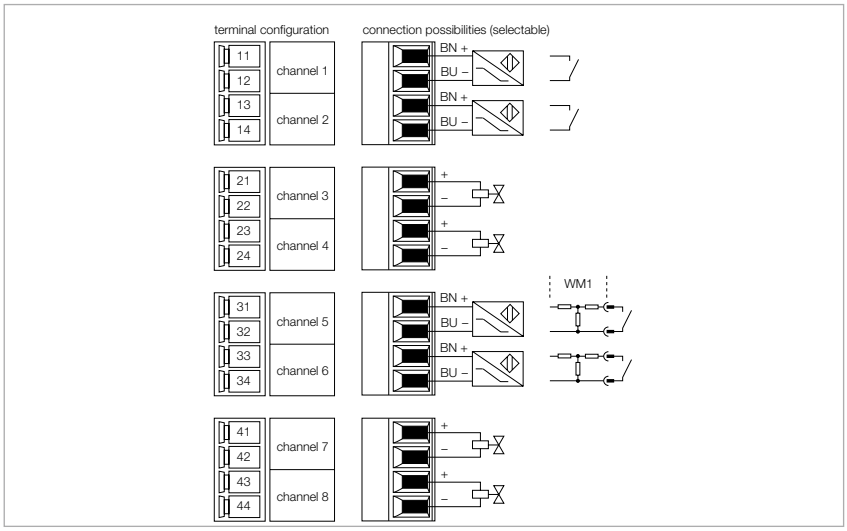

Features

- Input/output module for NAMUR sensors and actuators

The I/O module DM80-N is designed for the connection of NAMUR sensors (DIN EN 60 60947-5-6) and actuators. When wire-break or short-circuit monitoring are activated, mechanical contacts can only be connected with a corresponding resistor circuitry (WM1, Ident no. 0912101).

When connecting the field devices, care has to be taken that all inputs and/or outputs are on a common potential.

Input and output mode can be adjusted via the PROFIBUS-DP master. The following parameters can be adjusted: switching behaviour, switch-on delay, default value, wire-break and short circuit monitoring.

The user can furthermore determine whether an input or an output should be provided at the connecting point. The following configurations are possible: 8 inputs/0 outputs; 6 inputs/2 outputs up to 0 inputs/8 outputs (GSD-file, Mode 2). This way, optimal adaptation to the corresponding application environment is guaranteed.



Technical data

Type	DM80-N
Ident no.	6884211
Power supply	
Supply voltage	via the backplanes, central power supply
Power consumption	≤ 1 W
Galvanic separation	to int. bus and supply circuit
Number of channels	8-channel
Inputs	
Input circuits	acc. to EN 60947-5-6 (NAMUR)
No-load voltage	8 VDC
Short-circuit current	4 mA
Switching frequency	≤ 100 Hz
Short-circuit	< 367 Ω
Wire-break	< 0.2 mA
Switch-on threshold:	1.8 mA
Switch-off threshold:	1.4 mA
Outputs	
Output circuits	for low-power actuators
No-load voltage	8 VDC
Nominal current	4 mA
Switching frequency	≤ 100 Hz
Short circuit	< 367 Ω
Wire-break	< 0.2 mA
Internal resistance R_i	320 Ω
Indication	
Operational readiness	1 x green / red
State/ Fault	8 x yellow / red
Environmental Conditions	
Ambient temperature	-20…+70 °C
Relative humidity	≤ 95 % at 55 °C acc. to EN 60068-2
Vibration test	acc. to IEC 60068-2-6
Shock test	acc. to IEC 60068-2-27
EMC	acc. to EN 61326-1 (2006) acc. to NAMUR NE21 (2007)
MTTF	141 years acc. to SN 29500 (Ed. 99) 40 °C
Mechanical data	
Housing material	plastic
Connection mode	module, plugged on rack
Protection class	IP20
Dimensions	18 x 118 x 103 mm

Frequency module, 2-channel

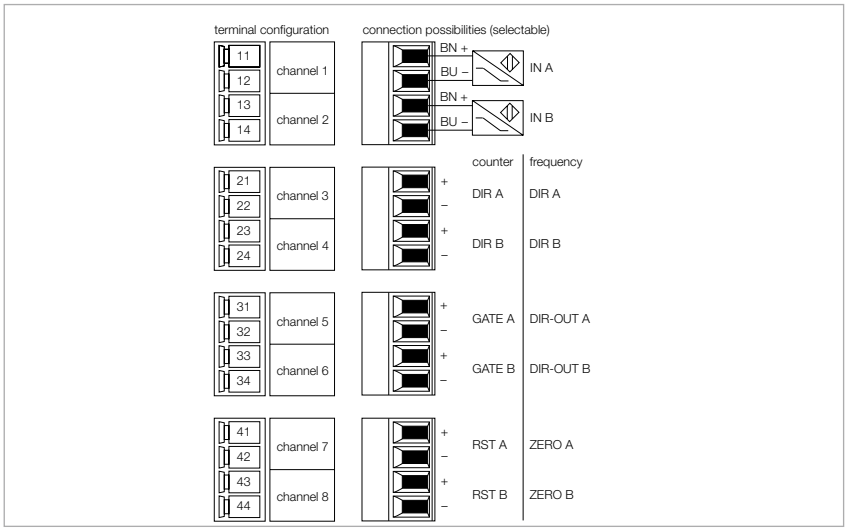

Features

- Frequency module for the connection of NAMUR sensors

The input module DF20-N is equipped with 8 channels acc. to NAMUR, which are grouped together in two blocks. There is one frequency input per block and three control inputs/outputs.

The module can be used as a counter or frequency input module: It is thus suited for pulse counting of binary input signals or frequency measurements of binary pulse sequences of NAMUR sensors.

The counting direction can either be set externally via a control input or internally by setting a parameter. The maximum frequency of one block is 4 kHz; with 2 blocks the frequency is reduced to 2 kHz.

Input and output mode can be adjusted via the PROFIBUS-DP master. Each channel is equipped with parametrizable wire-break/short-circuit monitoring.



Technical data

Type	DF20-N
Ident no.	6884212
Power supply	
Supply voltage	via the backplanes, central power supply
Power consumption	≤ 1 W
Galvanic separation	to int. bus and supply circuit
Number of channels	2-channel
Inputs	
Input circuits	acc. to EN 60947-5-6 (NAMUR)
No-load voltage	8 VDC
Short-circuit current	4 mA
Switching frequency	≤ 4000 Hz
Short-circuit	< 367 Ω
Wire-break	< 0.2 mA
Switch-on threshold:	1.8 mA
Switch-off threshold:	1.4 mA
Response characteristic	
Measuring accuracy	≤ 0.1 % of full scale
Indication	
Operational readiness	1 x green / red
State/ Fault	8 x yellow / red
Environmental Conditions	
Ambient temperature	-20…+70 °C
Relative humidity	≤ 95 % at 55 °C acc. to EN 60068-2
Vibration test	acc. to IEC 60068-2-6
Shock test	acc. to IEC 60068-2-27
EMC	acc. to EN 61326-1 (2006) acc. to NAMUR NE21 (2007)
MTTF	101 years acc. to SN 29500 (Ed. 99) 40 °C
Mechanical data	
Housing material	plastic
Connection mode	module, plugged on rack
Protection class	IP20
Dimensions	18 x 118 x 103 mm

Input module, digital, 4-channel

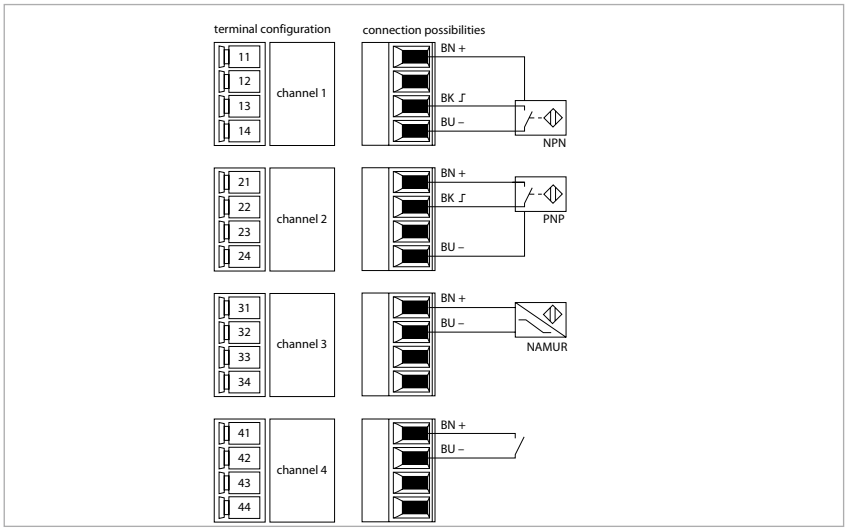

Features

- Input modules for NAMUR and 3-wire sensors (NPN and PNP)
- Power supply of the sensors out of the module (max. 20 mA at 12 VDC)
- Complete galvanic isolation

The input module DI40-N is designed for the connection of NAMUR sensors (DIN EN 60947-5-6), 3-wire sensors (NPN, PNP) or mechanical contacts.

When wire-break or short-circuit monitoring are activated, mechanical contacts can only be connected with a corresponding resistor circuitry (WM1, Ident no. 0912101).

The inputs are galvanically isolated from each other.

The behaviour of the inputs can be adjusted via the PROFIBUS-DP master. The following parameters can be adjusted: switching behaviour, switch-on delay, default value, wire-break and short circuit monitoring.



Technical data

Type	DI40-N
Ident no.	6884213

Power supply	
Supply voltage	via the backplanes, central power supply
Power consumption	≤ 2 W
Galvanic separation	complete galvanic isolation
Number of channels	4-channel

Inputs	
Input circuits	acc. to EN 60947-5-6 (NAMUR)
No-load voltage	8.2 VDC
Short-circuit current	2.7 mA
Switching frequency	≤ 100 Hz
Short-circuit	< 367 Ω
Wire-break	< 0.15 mA
Switch-on threshold:	1.8 mA
Switch-off threshold:	1.3 mA
3-wire input	
No-load voltage	12 VDC
Current	≤ 20 mA
0-signal	≤ 4.5 V
1-signal	≥ 6.5 V

Remark

The power supply for 3-wire sensors is also monitored for wire breaks and short circuits

Indication	
Operational readiness	1 x green / red
State/ Fault	4 x yellow / red

Environmental Conditions	
Ambient temperature	-20…+70 °C
Relative humidity	≤ 95 % at 55 °C acc. to EN 60068-2
Vibration test	acc. to IEC 60068-2-6
Shock test	acc. to IEC 60068-2-27
EMC	acc. EN 61326-1 (2013) acc. to Namur NE21 (2012)
MTTF	111 years acc. to SN 29500 (Ed. 99) 40 °C

Mechanical data	
Housing material	plastic
Connection mode	module, plugged on rack
Protection class	IP20
Dimensions	18 x 118 x 103 mm

Output module, digital, 4-channel

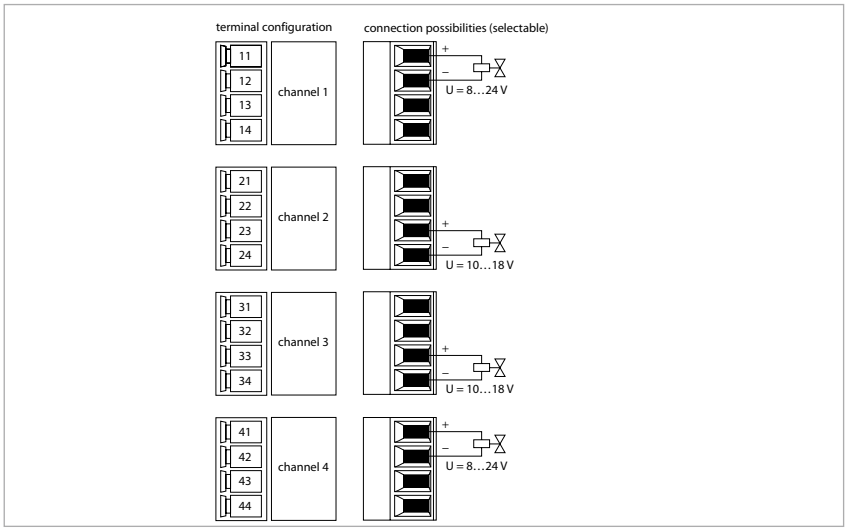

Features

- Output module for low-power actuators
- Complete galvanic isolation

The output module DO40-N is designed for the connection of low-power actuators such as valves or indicator lights.

The outputs of this module are galvanically isolated from each other.

One actuator per channel can be connected. Via selection of connecting terminals, two circuits per channel are made available with different supply data.

Please see the load curve, showing the connection values for valve control. The following values are supported for example:

- 22.5 V / 5 mA
- 19.0 V / 15 mA
- 16.0 V / 25 mA
- 14.0 V / 35 mA
- 12.0 V / 45 mA



Load curve terminal connection 1+2

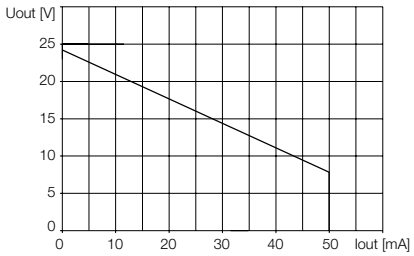

Load curve terminal connection 3+4

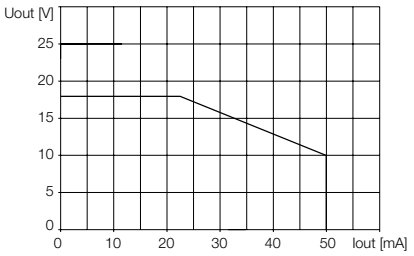

Technical data

Type	DO40-N
Ident no.	6884214
Power supply	
Supply voltage	via the backplanes, central power supply
Power consumption	≤ 4.5 W
Galvanic separation	complete galvanic isolation
Number of channels	4-channel
Outputs	
Output circuits	for low-power actuators
No-load voltage	24 VDC
Switching frequency	≤ 50 Hz
Short circuit	≥ 50 mA
Wire-break	< 1 mA
Internal resistance R_i	300 Ω
Indication	
Operational readiness	1 x green / red
State/ Fault	4 x yellow / red
Environmental Conditions	
Ambient temperature	-20…+70 °C
Relative humidity	≤ 95 % at 55 °C acc. to EN 60068-2
Vibration test	acc. to IEC 60068-2-6
Shock test	acc. to IEC 60068-2-27
EMC	acc. to EN 61326-1 (2006) acc. to NAMUR NE21 (2007)
MTTF	79 years acc. to SN 29500 (Ed. 99) 40 °C
Mechanical data	
Housing material	plastic
Connection mode	module, plugged on rack
Protection class	IP20
Dimensions	18 x 118 x 103 mm

Relay module, 6-channel

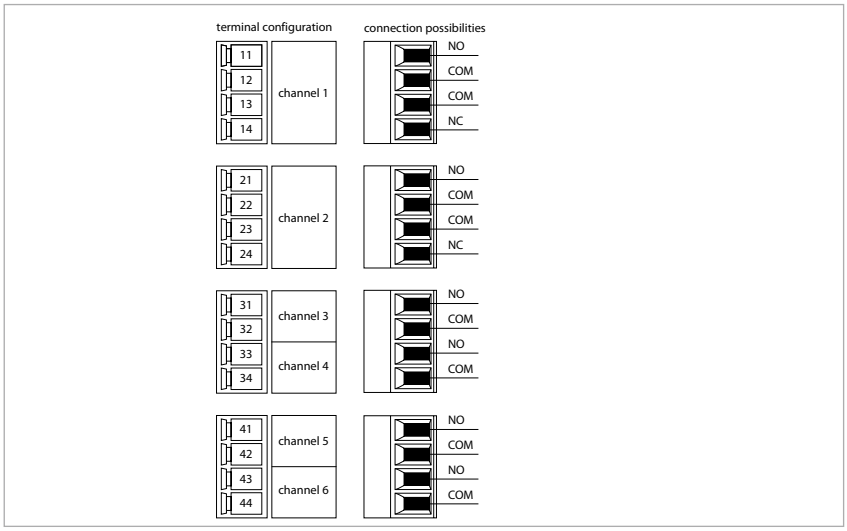

Features

- Relay output for higher switching capacity
- NO/NC configurable output
- Configurable as 4 x changeover contact
- Configurable as 6 x NO contact

The relay module DO60R-N is designed for the connection of non-intrinsically safe actuators such as valves or indicator lights.

The outputs are designed as zero-potential relay contacts.

- 2 x changeover contacts (channel 1 and 2)
- 4 x NO contacts (channel 3 to 6)

The channels 3/4 and 5/6 are separately switchable to changeover function. For this, an external bridge at the terminals is needed.

Note:
To protect the module rack, the contact circuits inside the DO60R-N module are safeguarded by fuses (1 AT). The module must be replaced after tripping the fuses. The connections 12-13 and 22-23 are not further protected and should maximally be loaded with the switching current of a relay contact. Use preferably terminal 12 resp. 22 for connection.

Status and error messages of the single outputs and the module are indicated via LEDs on the front.



Technical data

Type	DO60R-N
Ident no.	6884196
Power supply	
Supply voltage	via the backplanes, central power supply
Power consumption	≤ 2 W
Galvanic separation	complete galvanic isolation
Number of channels	6-channel
Outputs	
Output circuits	6 x relays (2 x changeover contacts, 4 x NO)
Switching current	≥ 10 mA
Indication	
Operational readiness	1 x green / red
State/ Fault	6 x yellow / red
Environmental Conditions	
Ambient temperature	-20…+60 °C
Relative humidity	≤ 95 % at 55 °C acc. to EN 60068-2
Vibration test	acc. to IEC 60068-2-6
Shock test	acc. to IEC 60068-2-27
EMC	acc. to EN 61326-1 (2006) acc. to NAMUR NE21 (2007)
MTTF	224 years acc. to SN 29500 (Ed. 99) 40 °C
Mechanical data	
Housing material	plastic
Connection mode	module, plugged on rack
Protection class	IP20
Dimensions	18 x 118 x 103 mm

Input module, analog, 4-channel

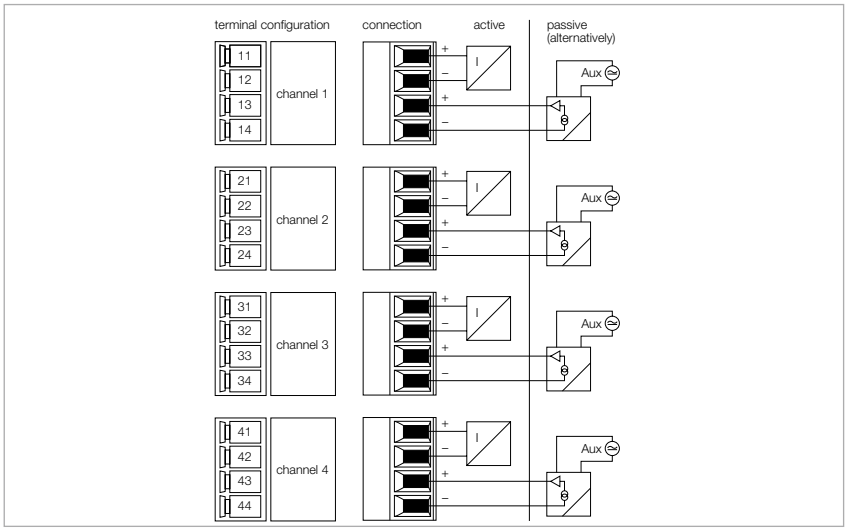

Features

- Input module for the connection of passive transmitters (active inputs) or active transmitters (passive inputs).
- Complete galvanic isolation

The input module AI40-N is designed for the connection of 2-wire transducers (active input = source mode / transducer passive) or 4-wire transducers (passive input = sink mode / transducer active).
The field circuits are galvanically isolated from each other.

HART® compatible transducers can be connected to the module. The field device can thus be parametrized directly at the terminals on the DIN rail with a licensed modem. An additional impedance in the circuit is not necessary.
The measuring range is digitized in the scope of 0…21 mA. For clear reading, the digitized value is displayed in a range of 0 … 21000 (independent of the parametrized measuring range) and transmitted to the host system.



Technical data

Type	AI40-N
Ident no.	6884215
Power supply	
Supply voltage	via the backplanes, central power supply
Power consumption	≤ 2.2 W
Galvanic separation	complete galvanic isolation
Number of channels	4-channel
Inputs	
Input circuits	0/4…20 mA
Supply voltage	15 VDC at 20 mA
Overload capability	> 21 mA
Low level control	< 3.6 mA
Short-circuit	> 24 mA (only in live zero mode)
Wire-break	< 2 mA (only in live zero mode)
Response characteristic	
Resolution	14 Bit
Linearity deviation	≤ 0.05 % full scale
Temperature drift	≤ 0.005 % / K
Rise time/fall time	≤ 50 ms (10 … 90 %)
Max. measurement tolerance under EMC influence	≤ 0.1 %
Indication	
Operational readiness	1 x green / red
State/ Fault	4 x red
Environmental Conditions	
Ambient temperature	-20…+70 °C
Relative humidity	≤ 95 % at 55 °C acc. to EN 60068-2
Vibration test	acc. to IEC 60068-2-6
Shock test	acc. to IEC 60068-2-27
EMC	acc. to EN 61326-1 (2006) acc. to NAMUR NE21 (2007)
MTTF	77 years acc. to SN 29500 (Ed. 99) 40 °C
Mechanical data	
Housing material	plastic
Connection mode	module, plugged on rack
Protection class	IP20
Dimensions	18 x 118 x 103 mm

Input module, analog, passive, 4-channel

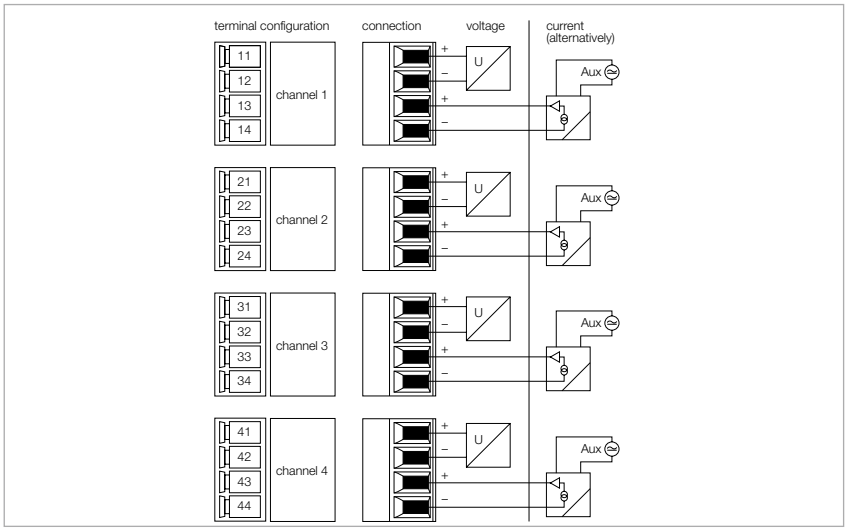

Features

- Input module for the connection of active transmitters (passive inputs)
- Complete galvanic isolation

The input module AI41-N is designed for the connection of 4-wire transducers (passive input = sink mode / transducer active).

The inputs are galvanically isolated from each other.

The resolution is 14 bit, i.e. the analog value between 0…21 mA is represented as a number between 0 and 16383. For clear reading, the digitized value is displayed in a range of 0…21000 and transmitted to the host system. For transmission to the host system, voltage is indicated as a value in a range between 0…10000.



Technical data

Type	AI41-N
Ident no.	6884216
Power supply	
Supply voltage	via the backplanes, central power supply
Power consumption	≤ 1 W
Galvanic separation	complete galvanic isolation
Number of channels	4-channel
Inputs	
Input circuits	0/4…20 mA
Overload capability	> 22 mA
Low level control	< 3.6 mA
Short-circuit	< 5 V (only in live zero mode)
Wire-break	< 2 mA (only in live zero mode)
Response characteristic	
Resolution	14 Bit
Linearity deviation	≤ 0.1 % full scale
Temperature drift	≤ 0.005 % / K
Rise time/fall time	≤ 50 ms (10 … 90 %)
Indication	
Operational readiness	1 x green / red
State/ Fault	4 x red
Environmental Conditions	
Ambient temperature	-20…+70 °C
Relative humidity	≤ 95 % at 55 °C acc. to EN 60068-2
Vibration test	acc. to IEC 60068-2-6
Shock test	acc. to IEC 60068-2-27
EMC	acc. to EN 61326-1 (2006) acc. to NAMUR NE21 (2007)
MTTF	98 years acc. to SN 29500 (Ed. 99) 40 °C
Mechanical data	
Housing material	plastic
Connection mode	module, plugged on rack
Protection class	IP20
Dimensions	18 x 118 x 103 mm

Potentiometer module, 4-channel

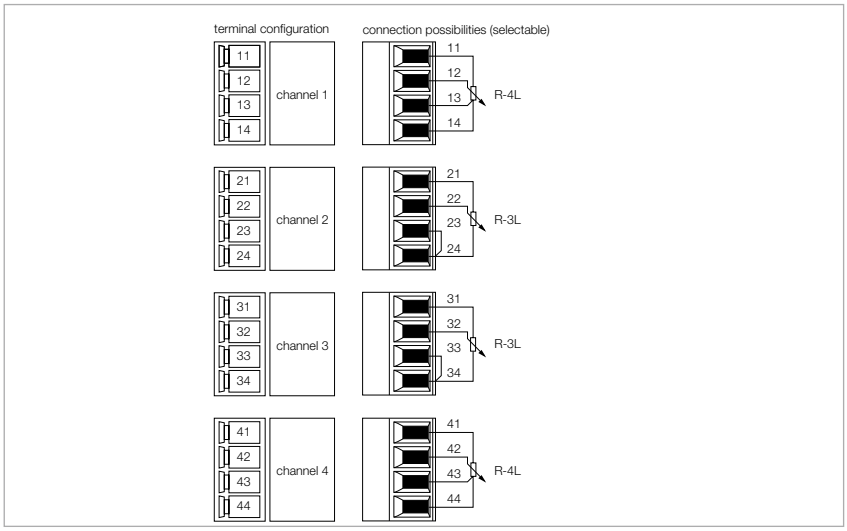

Features

- Input module for the connection of potentiometers
- Complete galvanic isolation

The analog input module AI43-N is designed for the connection of potentiometers in 3 or 4-wire technology. If 3-wire potentiometers are used, the terminals at the module rack have to be bridged. Resistance measurements, i.e. the evaluation of potentiometers with a 2-wire connection, is not possible.

The module has four field circuits to control 3 or 4-wire potentiometers. The field circuits are galvanically isolated from the power supply, from the internal bus and from each other.

Each potentiometer input is monitored for wire break. The interruption of a single connection line is securely detected, as well as any combination of interruptions occuring at the four input connection lines. Short-circuit monitoring is not carried out. In case of a line error, the programmed substitute value is immediately output and the output value is set to ‚invalid-bit'. This state is maintained until valid measured values are provided again.

The resolution is 14 bit. For clear reading, 0…100 % is digitized and displayed in a range of 0…10000 (independent of the parametrized measuring range) and transmitted to the host system.



Technical data

Type	AI43-N
Ident no.	6884217
Power supply	
Supply voltage	via the backplanes, central power supply
Power consumption	≤ 1.5 W
Galvanic separation	complete galvanic isolation
Number of channels	4-channel
Inputs	
Input circuits	potentiometer
Nominal resistance	400 Ω … 12 kΩ
Response characteristic	
Resolution	14 Bit
Linearity deviation	≤ 0.1 % full scale
Temperature drift	≤ 0.005 % / K
Rise time/fall time	≤ 50 ms (10 … 90 %)
Indication	
Operational readiness	1 x green / red
State/ Fault	4 x red
Environmental Conditions	
Ambient temperature	-20…+70 °C
Relative humidity	≤ 95 % at 55 °C acc. to EN 60068-2
Vibration test	acc. to IEC 60068-2-6
Shock test	acc. to IEC 60068-2-27
EMC	acc. to EN 61326-1 (2006) acc. to NAMUR NE21 (2007)
MTTF	71 years acc. to SN 29500 (Ed. 99) 40 °C
Mechanical data	
Housing material	plastic
Connection mode	module, plugged on rack
Protection class	IP20
Dimensions	18 x 118 x 103 mm

Output module, analog, 4-channel

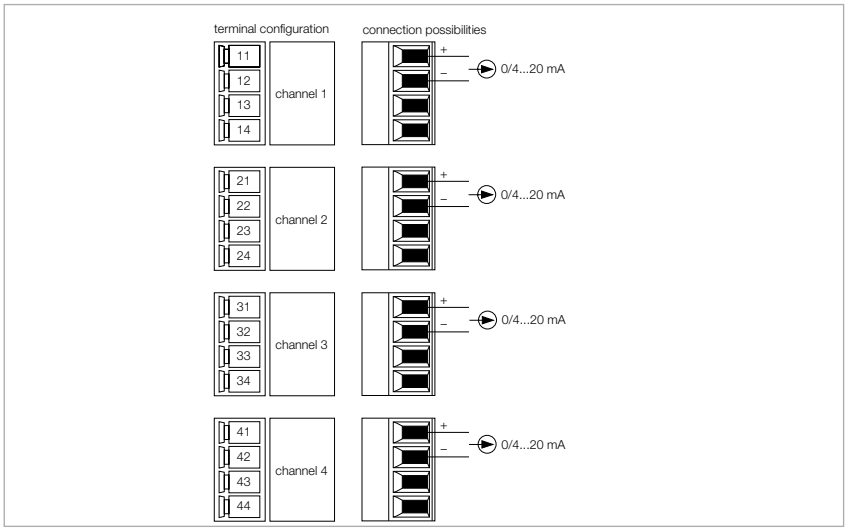

Features

- Output module for the connection of analog actuators
- Complete galvanic isolation

The output module AO40-N is designed for the connection of analog actuators such as control valves or process indicators. The outputs are galvanically isolated from each other.

HART® compatible transducers can be connected to the module. The field device can thus be parametrized directly at the terminals on the DIN rail with a licensed modem. An additional impedance in the circuit is not necessary.

The host system transmits a digitized control value 0…21000 (independent of the parametrized measuring range). This raw value is then transformed by the AO40-N into a value between 0…21 mA.



Technical data

Type	AO40-N
Ident no.	6884218
Power supply	
Supply voltage	via the backplanes, central power supply
Power consumption	≤ 2.2 W
Galvanic separation	complete galvanic isolation
Number of channels	4-channel
Outputs	
Output circuits	0/4…20 mA
No-load voltage	16 VDC
External load	≤ 640 Ω
Short circuit	< 50 Ω (only in live zero mode)
Wire-break	< 2 mA (only in live zero mode)
Response characteristic	
Resolution	13 Bit
Linearity deviation	≤ 0.05 % full scale
Temperature drift	≤ 0.005 % / K
Rise time/fall time	≤ 50 ms (10 … 90 %)
Max. measurement tolerance under EMC influence	≤ 0.1 %
Indication	
Operational readiness	1 x green / red
State/ Fault	4 x red
Environmental Conditions	
Ambient temperature	-20…+70 °C
Relative humidity	≤ 95 % at 55 °C acc. to EN 60068-2
Vibration test	acc. to IEC 60068-2-6
Shock test	acc. to IEC 60068-2-27
EMC	acc. to EN 61326-1 (2006) acc. to NAMUR NE21 (2007)
MTTF	78 years acc. to SN 29500 (Ed. 99) 40 °C
Mechanical data	
Housing material	plastic
Connection mode	module, plugged on rack
Protection class	IP20
Dimensions	18 x 118 x 103 mm

Input module, analog, active, HART®, 4-channel

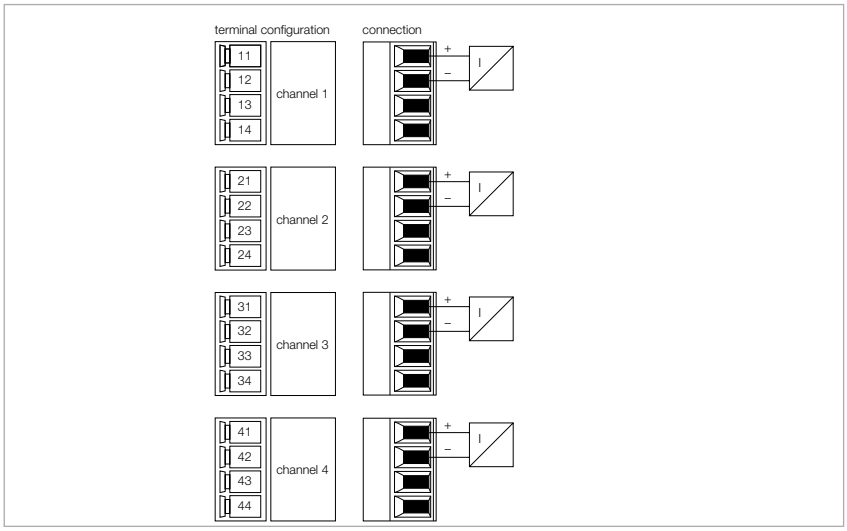

Features

- Input module for connection of 2-wire transmitters
- Transmission of HART® data

The input module AIH40-N is designed for the connection of 2-wire transducers (active input = source mode / transducer passive).

The inputs are not galvanically isolated from each other. When connecting the field devices, care has to be taken that all inputs are on a common potential.

HART® compatible sensors connected to the module communicate with the integrated HART® controller.

The resolution is 14 bit, i.e. the analog value between 0…21 mA is represented as a number between 0 and 16383. For clear reading, the digitized value is displayed in a range of 0…21000 and transmitted to the host system.

Up to 8 HART® variables (max. 4 per channel) can be read via the cyclical PROFIBUS data traffic. The bidirectional exchange of variables between the host system and the HART® transmitter is implemented via PROFIBUS-DPV1.

Parameters like wire-break or short-circuit monitoring, measuring range, HART® communication etc., can be adjusted for each channel separately and are solely initialized by the PROFIBUS master.



Technical data

Type	AIH40-N
Ident no.	6884219
Power supply	
Supply voltage	via the backplanes, central power supply
Power consumption	≤ 3 W
Galvanic separation	to int. bus and supply circuit
Number of channels	4-channel
Inputs	
Input circuits	0/4…20 mA
Supply voltage	15 VDC at 22 mA
HART® Impedance	> 240 Ω
Overload capability	> 22 mA
Low level control	< 3.6 mA
Short-circuit	< 5 V (only in live zero mode)
Wire-break	< 2 mA (only in live zero mode)
Response characteristic	
Resolution	14 Bit
Linearity deviation	≤ 0.1 % full scale
Temperature drift	≤ 0.005 % / K
Rise time/fall time	≤ 50 ms (10 … 90 %)
Max. measurement tolerance under EMC influence	≤ 0.1 % with shielded signal cable ≤ 1 % with unshielded signal cable
Indication	
Operational readiness	1 x green / red
State/ Fault	4 x red
Environmental Conditions	
Ambient temperature	-20…+60 °C
Relative humidity	≤ 95 % at 55 °C acc. to EN 60068-2
Vibration test	acc. to IEC 60068-2-6
Shock test	acc. to IEC 60068-2-27
EMC	acc. to EN 61326-1 (2006) acc. to NAMUR NE21 (2007)
MTTF	61 years acc. to SN 29500 (Ed. 99) 40 °C
Mechanical data	
Housing material	plastic
Connection mode	module, plugged on rack
Protection class	IP20
Dimensions	18 x 118 x 103 mm

Input module, analog, passive, HART®, 4-channel

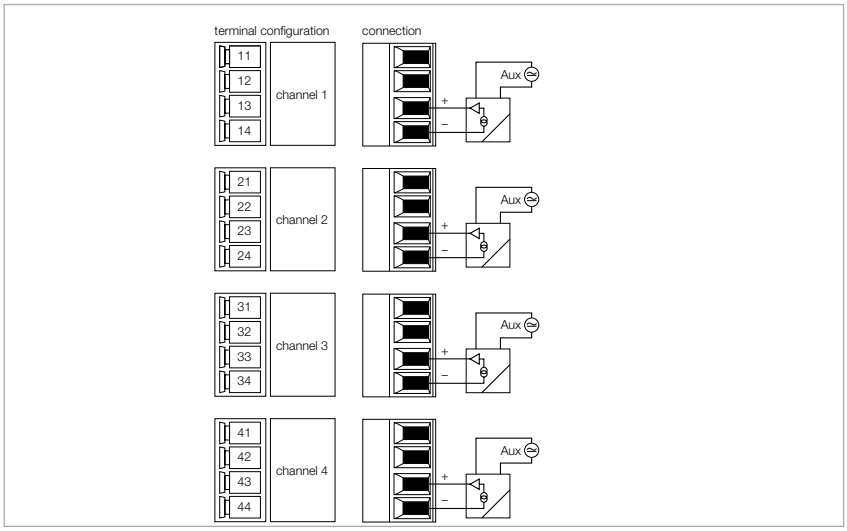

Features

- Input module for connection of 4-wire transmitters
- Transmission of HART® data

The input module AIH41-N is designed for the connection of 4-wire transducers (passive input = sink mode / transducer active).

The inputs are not galvanically isolated from each other. When connecting the field devices, care has to be taken that all inputs are on a common potential.

HART® compatible sensors connected to the module communicate with the HART® controller.

The resolution is 14 bit, i.e. the analog value between 0…21 mA is represented as a number between 0 and 16383. For clear reading, the digitized value is displayed in a range of 0…21000 and transmitted to the host system.

Up to 8 HART® variables (max. 4 per channel) can be read via the cyclical PROFIBUS data traffic. The bidirectional exchange of variables between the host system and the HART® transmitter is implemented via PROFIBUS-DPV1.

Parameters like wire-break or short-circuit monitoring, measuring range, HART® communication etc., can be adjusted for each channel separately and are solely initialized by the PROFIBUS master.



Technical data

Type	AIH41-N
Ident no.	6884220
Power supply	
Supply voltage	via the backplanes, central power supply
Power consumption	≤ 1 W
Galvanic separation	to int. bus and supply circuit
Number of channels	4-channel
Inputs	
Input circuits	0/4…20 mA
HART® Impedance	> 240 Ω
Overload capability	> 22 mA
Low level control	< 3.6 mA
Short-circuit	< 5 V (only in live zero mode)
Wire-break	< 2 mA (only in live zero mode)
Response characteristic	
Resolution	14 Bit
Linearity deviation	≤ 0.1 % full scale
Temperature drift	≤ 0.005 % / K
Rise time/fall time	≤ 50 ms (10 … 90 %)
Max. measurement tolerance under EMC influence	≤ 0.1 % with shielded signal cable ≤ 1 % with unshielded signal cable
Indication	
Operational readiness	1 x green / red
State/ Fault	4 x red
Environmental Conditions	
Ambient temperature	-20…+60 °C
Relative humidity	≤ 95 % at 55 °C acc. to EN 60068-2
Vibration test	acc. to IEC 60068-2-6
Shock test	acc. to IEC 60068-2-27
EMC	acc. to EN 61326-1 (2006) acc. to NAMUR NE21 (2007)
MTTF	93 years acc. to SN 29500 (Ed. 99) 40 °C
Mechanical data	
Housing material	plastic
Connection mode	module, plugged on rack
Protection class	IP20
Dimensions	18 x 118 x 103 mm

Output module, analog, HART®, 4-channel

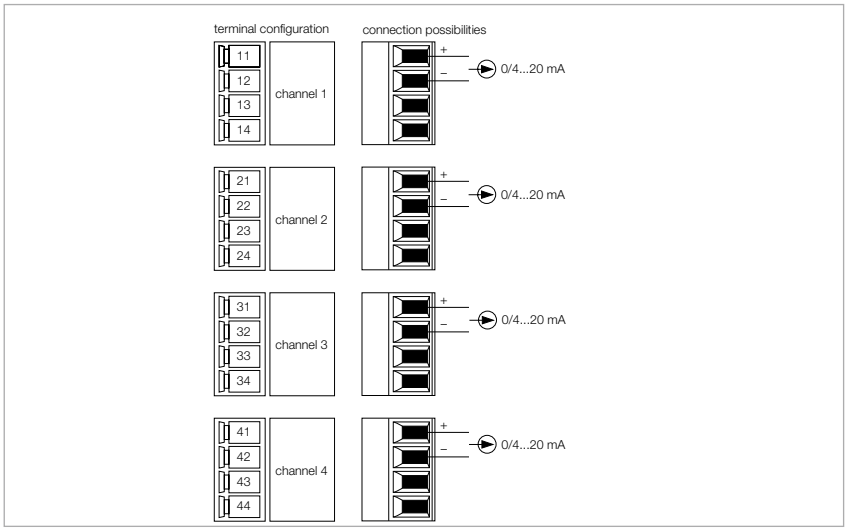

Features

- Output module for the connection of analog actuators
- Transmission of HART® data

The output module AOH40-N is designed for the connection of analog actuators such as control valves or process indicators.

The outputs are not galvanically isolated from each other. When connecting the field devices, care has to be taken that all outputs are on a common potential.

HART® compatible actuators connected to the module communicate directly with the HART® controller.

The resolution is 13 bit, i.e. the analog value of 0…21 mA is represented as a number between 0 and 8191. For easier operation, the host system operates in a value range between 0…21000. This raw value is reduced by the AOH40-N to a 13-bit resolution.

Parameters such as line monitoring, substitute values etc. can be adjusted for each channel separately and are initialized solely by the master.



Technical data

Type	AOH40-N
Ident no.	6884221
Power supply	
Supply voltage	via the backplanes, central power supply
Power consumption	≤ 3 W
Galvanic separation	to int. bus and supply circuit
Number of channels	4-channel
Outputs	
Output circuits	0/4…20 mA
No-load voltage	16 VDC
HART® Impedance	> 240 Ω
External load	≤ 600 Ω
Short circuit	< 50 Ω (only in live zero mode)
Wire-break	> 15 V (only in live zero mode)
Response characteristic	
Resolution	13 Bit
Linearity deviation	≤ 0.1 % full scale
Temperature drift	≤ 0.005 % / K
Rise time/fall time	≤ 50 ms (10 … 90 %)
Max. measurement tolerance under EMC influence	≤ 0.1 % with shielded signal cable ≤ 1 % with unshielded signal cable
Indication	
Operational readiness	1 x green / red
State/ Fault	4 x red
Environmental Conditions	
Ambient temperature	-20…+60 °C
Relative humidity	≤ 95 % at 55 °C acc. to EN 60068-2
Vibration test	acc. to IEC 60068-2-6
Shock test	acc. to IEC 60068-2-27
EMC	acc. to EN 61326-1 (2006) acc. to NAMUR NE21 (2007)
MTTF	66 years acc. to SN 29500 (Ed. 99) 40 °C
Mechanical data	
Housing material	plastic
Connection mode	module, plugged on rack
Protection class	IP20
Dimensions	18 x 118 x 103 mm

Input module, temperature, 4-channel

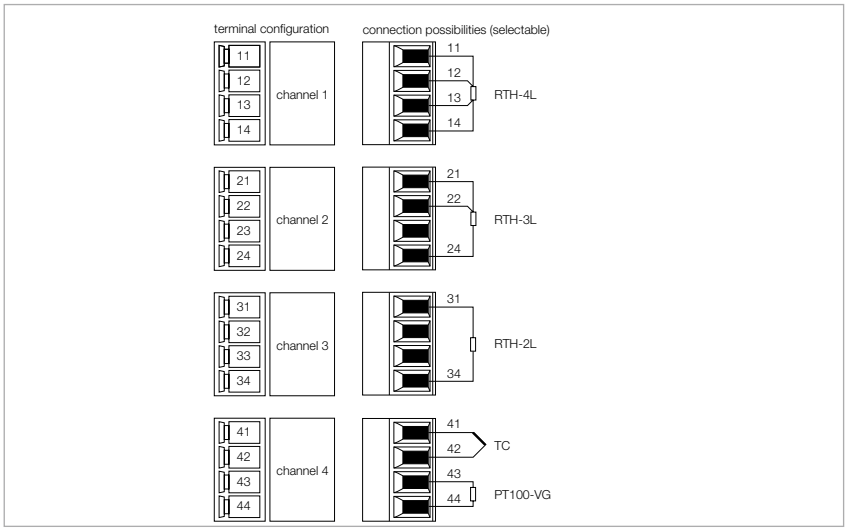

Features

- Input module for the connection of temperature probes
- Complete galvanic isolation

The input module TI40-N is designed for the connection of 2, 3 and 4-wire temperature probes of the types Pt100, PT200, Pt500, Pt1000, Ni100 and CU100, as well as for the connection of thermocouples of the types B, E, D, J, K, L, N, R, S, T and U. The module can also be used for the measurement of low voltages (-75…+75 mV, -1.2…+1.2 V) and resistance measurements (0…30 Ω, 0…300 Ω, 0…3 kΩ).

Line compensation of 2-wire temperature resistors is done by means of parametrized resistance values. These values have to be determined first through measurements.

When using thermocouples, external cold junction compensation can be carried out separately for each channel by connecting resistors such as the Pt100 to the two unused terminals. Internal compensation instead is parametrized for all channels via an integrated Pt100 resistor.

The resolution is 16 bit, i.e. the analog value is represented as a number between 0 and 65535. The temperature is indicated in Kelvin. For conversion to °C, please observe an offset of 273.2.

Parameters such as line monitoring, substitute values etc. can be adjusted for each channel separately and are initialized solely by the master.



Technical data

Type	TI40-N
Ident no.	6884222
Power supply	
Supply voltage	via module rack, central power supply module
Power consumption	≤ 1 W
Galvanic separation	complete galvanic isolation
Number of channels	4-channel
Inputs	
Input circuits	Pt100, Pt200, Pt500, Pt1000, Ni 100, Cu100, thermocouple
Response characteristic	
Resolution	16 Bit
Linearity deviation	≤ 0.05 % measuring range
Temperature drift	≤ 0.005 % / K
Rise time/fall time	≤ 1.3 s (10 … 90 %)
Max. measurement tolerance under EMC influence	≤ 0.1 % with shielded signal cable ≤ 1 % with unshielded signal cable
Indication	
Operational readiness	1 x green / red
State/ Fault	4 x red
Environmental Conditions	
Ambient temperature	-20…+60 °C
Relative humidity	≤ 95 % at 55 °C acc. to EN 60068-2
Vibration test	acc. to IEC 60068-2-6
Shock test	acc. to IEC 60068-2-27
EMC	acc. to EN 61326-1 (2006) acc. to NAMUR NE21 (2007)
MTTF	62 years acc. to SN 29500 (Ed. 99) 40 °C
Mechanical data	
Housing material	plastic
Connection mode	module, plugged on rack
Protection class	IP20
Dimensions	18 x 118 x 103 mm

Input module, temperature, 4-channel

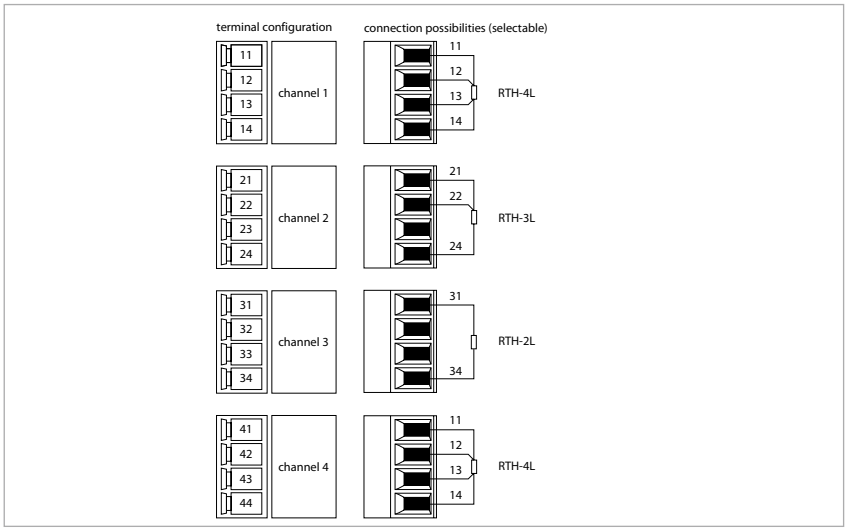

Features

- Input module for the connection of RTDs (resistance thermo detectors)
- Complete galvanic isolation

The input module TI41-N is designed for the connection of the 2, 3 and 4-wire temperature probes Pt100, Ni100 and CU100.

Line compensation of 2-wire temperature resistors is done by means of parametrized resistance values. These values have to be determined first through measurements.

The analog resistance value is digitized to 16-bit. The temperature is given in Kelvin, the resolution in 0.1 K steps. For conversion to °C, please observe an offset of 273.2.

Parameters such as line monitoring, substitute values etc. can be adjusted for each channel separately and are initialized solely by the master.



Technical data

Type	TI41-N
Ident no.	6884223
Power supply	
Supply voltage	via module rack, central power supply module
Power consumption	≤ 1 W
Galvanic separation	complete galvanic isolation
Number of channels	4-channel
Inputs	
Input circuits	Pt100, Ni100, Cu100
Response characteristic	
Resolution	16 Bit
Linearity deviation	≤ 0.01 % measuring range
Temperature drift	≤ 0.002 % / K
Rise time/fall time	≤ 50 ms (10 … 90 %)
Max. measurement tolerance under EMC influence	≤ 0.1 % with shielded signal cable ≤ 0.5 % with unshielded signal cable
Indication	
Operational readiness	1 x green / red
State/ Fault	4 x red
Environmental Conditions	
Ambient temperature	-20…+70 °C
Relative humidity	≤ 95 % at 55 °C acc. to EN 60068-2
Vibration test	acc. to IEC 60068-2-6
Shock test	acc. to IEC 60068-2-27
EMC	acc. to EN 61326-1 (2006) acc. to NAMUR NE21 (2007)
MTTF	80 years acc. to SN 29500 (Ed. 99) 40 °C
Mechanical data	
Housing material	plastic
Connection mode	module, plugged on rack
Protection class	IP20
Dimensions	18 x 118 x 103 mm

PROFIBUS-DP interface

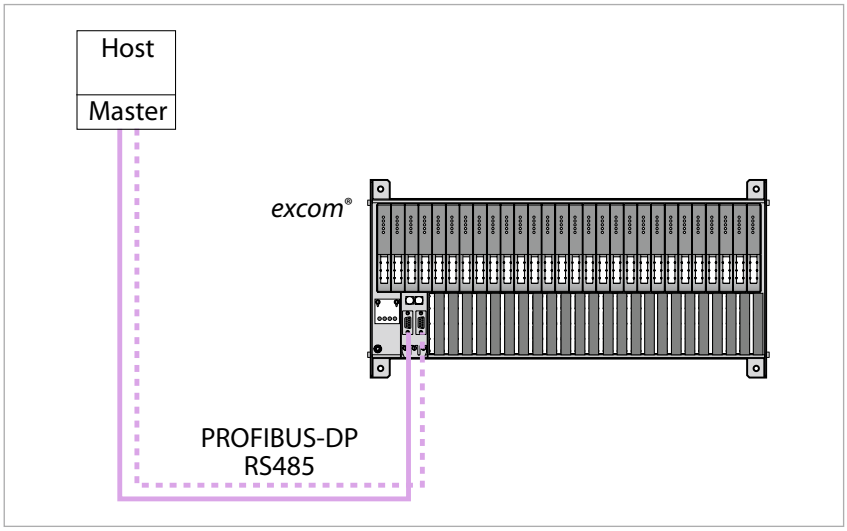

Features

- Gateway for PROFIBUS-DPV1 communication
- Connection of the *excom*® station to the PROFIBUS-DP networks
- Baud rate max. 1.5 Mbps
- PROFIBUS interface acc. to PROFIBUS user organization (PNO)

The GDP-N gateway serves to connect the *excom*® system to PROFIBUS-DP networks. Connection to the PROFIBUS-DP is established via optical fibers or copper cables. When using optical fibers for data transmission, an optocoupler pair must be installed between wired and optical PROFIBUS.

The gateway can be operated at a maximum transmission rate of 1500 kbps. The bus is connected to a standard miniature SUB-D slot on the module rack.

A GSD file containing all configuration files and parameter sets is available for system configuration. When connected to suitable host systems, you can change the system configuration during operation.

The gateway provides the entire range of PROFIBUS diagnostic functions including port-related diagnostics. Additionally, manufacturer-specific error codes are generated. For example HART® communication errors, power supply errors, planning errors as well as information on simulators, internal communication and redundancy status.

Redundancy: The use of two gateways and two bus cables ensures error-free communication, in case one gateway or one bus line may fail. If one of the components fails, the other immediately takes over, this is called line redundancy. System redundancy (two masters, each with its own segment coupler connected to a gateway) is also supported.

Recommended wiring components:
- PROFIBUS-DP cable, type 452
- D9T-RS485 male



Technical data

Type	GDP-N /FW2.2
Ident no.	6884224
Power supply	
Supply voltage	via module rack, central power supply module
Power consumption	≤ 1 W
Galvanic separation	to int. bus and supply circuit
System data	
Fieldbus transmission rate	9.6 kbps … 1.5 Mbps
Fieldbus address range	1…99
Indication	
Operational readiness	1 x green / red
Int. communication (CAN)	1 x yellow / red
Ext. Communication (PDP)	1 x yellow / red
Redundancy readiness (PRIO)	1 x yellow / red
Error indication	1 x red
Environmental Conditions	
Ambient temperature	-20…+70 °C
Relative humidity	≤ 95 % at 55 °C acc. to EN 60068-2
Vibration test	acc. to IEC 60068-2-6
Shock test	acc. to IEC 60068-2-27
EMC	acc. to EN 61326-1 (2006) acc. to NAMUR NE21 (2007)
MTTF	144 years acc. to SN 29500 (Ed. 99) 40 °C
Mechanical data	
Housing material	plastic
Connection mode	module, plugged on rack
Protection class	IP20
Dimensions	18 x 118 x 103 mm

Power supply module, 24 VDC, non-Ex

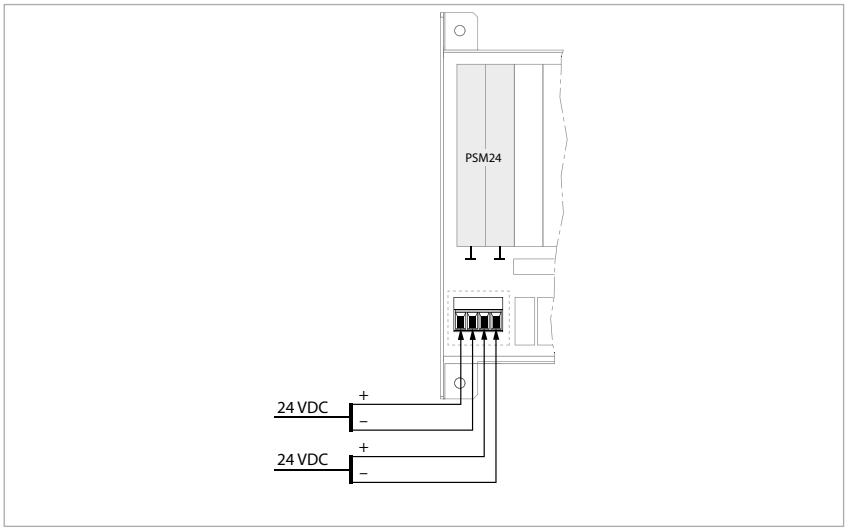

Features

- DC power supply module, supplies a module rack in the non-Ex area

The PSM24-N unit supplies the excom® system with power to the full extension. The power supply module can only be used in non-Ex areas.

The PSM24-N supplies 24 VDC.

The external power supply is connected via clamps on the module rack. The clamps should not be contacted under power. They are located below a closure cap. Switch off power before contact.

Redundancy: Two power supply modules can be installed together with an appropriate module rack. In case of power cut or failure of one device, the second unit provides the power for the whole system. Different potentials can be supplied.



Technical data

Type	PSM24-N
Ident no.	6881723
Power supply	
Nominal voltage	24 VDC
Operating voltage range	19.2…32 VDC
Power consumption	≤ 66.5 W
Output power	≤ 60 W
Galvanic separation	Galvanically isolated input and output circuit, rated voltage 40 V
Indication	
Operational readiness	1 x green
Error indication	1 x red
Environmental Conditions	
Ambient temperature	-20…+70 °C
Relative humidity	≤ 95 % at 55 °C acc. to EN 60068-2
Vibration test	acc. to IEC 60068-2-6
Shock test	acc. to IEC 60068-2-27
EMC	acc. to EN 61326-1 (2006) acc. to NAMUR NE21 (2007)
MTTF	61 years acc. to SN 29500 (Ed. 99) 40 °C
Mechanical data	
Electrical connection	via backplane
Terminal cross-section	2.5 mm^2 flexible / 4.0 mm^2 rigid
Housing material	plastic
Connection mode	module, plugged on rack
Protection class	IP20
Dimensions	18 x 118 x 103 mm

Module rack, non-Ex, for 8 modules

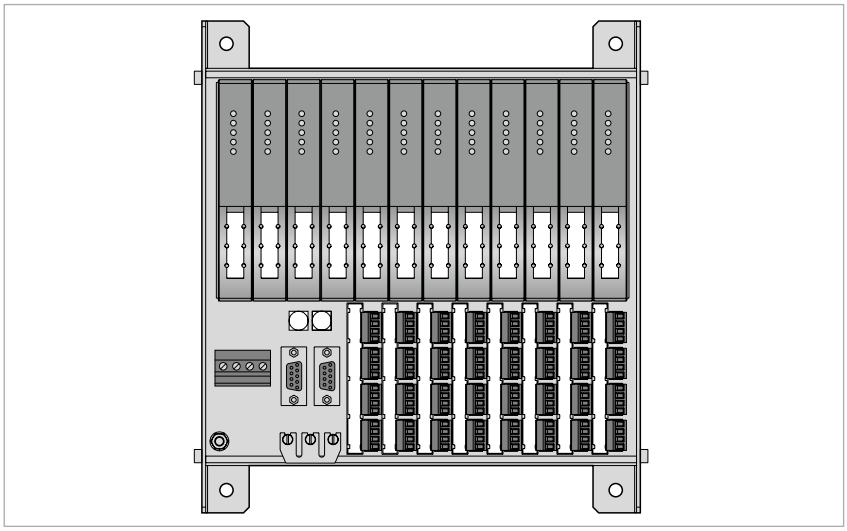

Features

- Module rack for max. 8 I/O modules, 2 gateways and 2 power supply modules
- The terminals for the signal connection level are available as accessories

The module rack MT08-N consists of a backplane and the actual rack system. It can accommodate a gateway, a power supply unit as well as 8 I/O modules. Up to 64 binary inputs/outputs or 32 analog inputs/outputs resp. a mix of both can be connected to it.

All modules can be plugged and unplugged under power without interrupting the data transmission. The same applies to redundant gateways and power supply modules.

The module rack can only be used in non-Ex areas for non-Ex signals.

The rack system is made of continuously cast aluminium. This ensures increased stability and shielding. The module rack is suited for wall and rack mounting.

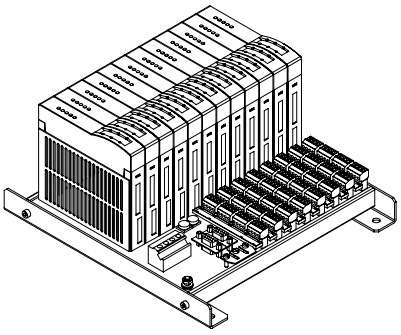

Technical data

Type	MT08-N
Ident no.	9100689
System data	
Fieldbus addressing	2 x decimal-coded rotary switches
Fieldbus connection technology	2 x 9-pin D-SUB
Ports	
DC power supply	2
Gateway	2
Block I/O	8
Environmental Conditions	
Ambient temperature	-20…+70 °C
Relative humidity	≤ 95 % at 55 °C acc. to EN 60068-2
Vibration test	acc. to IEC 60068-2-6
Shock test	acc. to IEC 60068-2-27
EMC	acc. to EN 61326-1 (2006) acc. to NAMUR NE21 (2007)
MTTF	acc. to SN 29500 (Ed. 99) 40 °C
Mechanical data	
Electrical connection	4 x 4 clamps per module
Terminal cross-section	1.5 mm²
Housing material	continuously cast aluminium
Connection mode	wall mounting
Protection class	IP20
Dimensions	235 x 260 x 130 mm

Module rack, non-Ex, for 16 modules

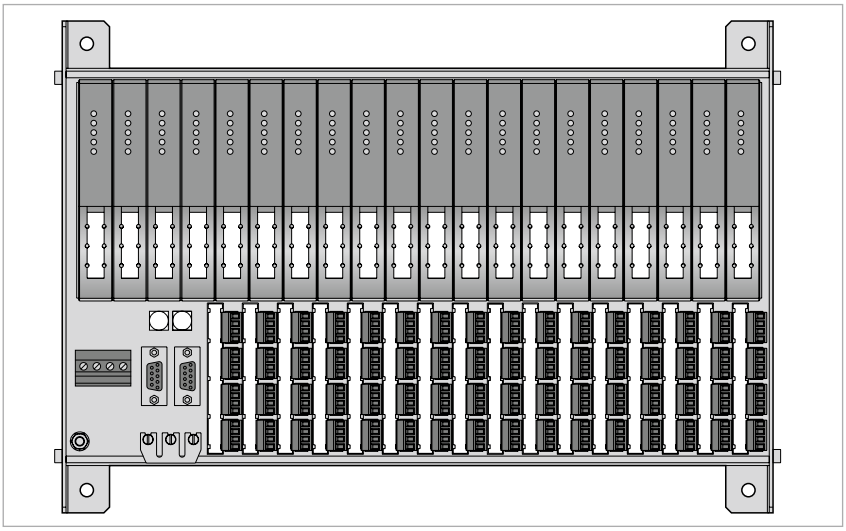

Features

- Module rack for max. 16 I/O modules, 2 gateways and 2 power supply modules
- The terminals for the signal connection level are available as accessories

The module rack MT16-N consists of a backplane and the actual rack system. It can accommodate 2 gateways, 2 power supply units as well as 16 I/O modules. Up to 128 binary inputs/outputs or 64 analog inputs/outputs resp. a mix of both can be connected to it.

All modules can be plugged and unplugged under power without interrupting the data transmission. The same applies to redundant gateways and power supply modules.

The module rack can only be used in non-Ex areas for non-Ex signals.

The rack system is made of continuously cast aluminium. This ensures increased stability and shielding. The module rack is suited for wall and rack mounting.

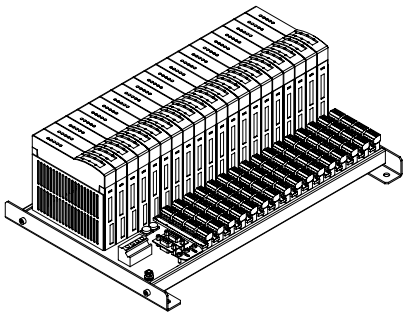

Technical data

Type	MT16-N
Ident no.	9100686
System data	
Fieldbus addressing	2 x decimal-coded rotary switches
Fieldbus connection technology	2 x 9-pin D-SUB
Ports	
DC power supply	2
Gateway	2
Block I/O	16
Environmental Conditions	
Ambient temperature	-20…+70 °C
Relative humidity	≤ 95 % at 55 °C acc. to EN 60068-2
Vibration test	acc. to IEC 60068-2-6
Shock test	acc. to IEC 60068-2-27
EMC	acc. to EN 61326-1 (2006) acc. to NAMUR NE21 (2007)
MTTF	acc. to SN 29500 (Ed. 99) 40 °C
Mechanical data	
Electrical connection	4 x 4 clamps per module
Terminal cross-section	1.5 mm²
Housing material	continuously cast aluminium
Connection mode	wall mounting
Protection class	IP20
Dimensions	380 x 260 x 130 mm

Module rack, non-Ex, for 24 modules

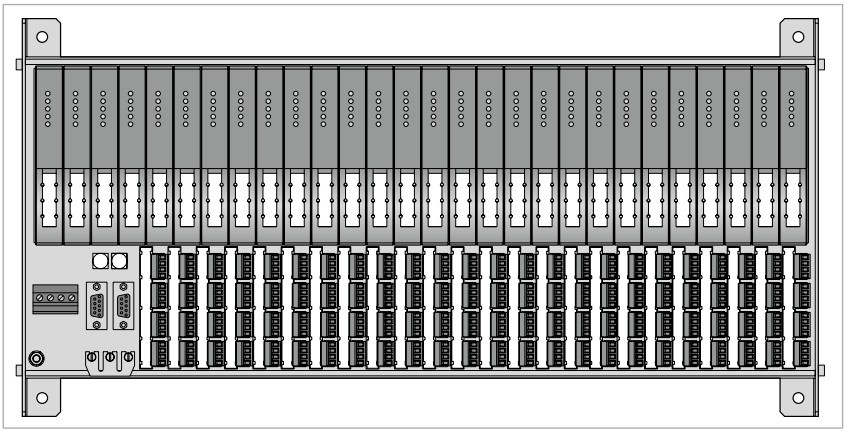

Features

- Module rack for max. 24 I/O modules, 2 gateways and 2 power supply modules
- The terminals for the signal connection level are available as accessories

The module rack MT24-3G consists of a backplane and the actual rack system. It can accommodate 2 gateways, 2 power supply units as well as 24 I/O modules. Up to 192 binary inputs/outputs or 96 analog inputs/outputs resp. a mix of both can be connected to it.

All modules can be plugged and unplugged under power without interrupting the data transmission. The same applies to redundant gateways and power supply modules.

The module rack can only be used in non-Ex areas for non-Ex signals.

The rack system is made of continuously cast aluminium. This ensures increased stability and shielding. The module rack is suited for wall and rack mounting.

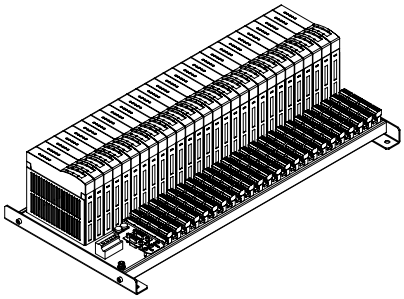

Technical data

Type	MT24-N
Ident no.	9100683
System data	
Fieldbus addressing	2 x decimal-coded rotary switches
Fieldbus connection technology	2 x 9-pin D-SUB
Ports	
DC power supply	2
Gateway	2
Block I/O	24
Environmental Conditions	
Ambient temperature	-20…+70 °C
Relative humidity	≤ 95 % at 55 °C acc. to EN 60068-2
Vibration test	acc. to IEC 60068-2-6
Shock test	acc. to IEC 60068-2-27
EMC	acc. to EN 61326-1 (2006) acc. to NAMUR NE21 (2007)
MTTF	1211 years acc. to SN 29500 (Ed. 99) 40 °C
Mechanical data	
Electrical connection	4 x 4 clamps per module
Terminal cross-section	1.5 mm²
Housing material	continuously cast aluminium
Connection mode	wall mounting
Protection class	IP20
Dimensions	525 x 260 x 130 mm

System enclosure

Type code of system enclosure

EC-VA 65 55 26 / 1 1 1 – 02 0 0 / ...

EG System enclosure

- **System enclosure**
  - **EG** *excom*® System enclosure, stainless steel

VA Optional labelling

- **Optional labelling**
  - **VA** optional labelling

65 55 26 Dimensions **/**

- **Width**
  - **...** housing depth in cm
- **Height**
  - **...** housing height in cm
- **Depth**
  - **...** housing width in cm

1 Material

- **Material**
  - **0** stainless steel 1.4301
  - **1** stainless steel 1.4404

1 Inspection window

- **Inspection window**
  - **0** without inspection window
  - **1** with inspection window

1 Drilling pattern **–**

- **Drilling pattern**
  - **0** dummy plate
  - **1** flange plate M16
  - **2** flange plate M20
  - **3** special version e.g. drilling pattern, recorded by special number

02 Module rack

- **Module rack**
  - **00** no module rack
  - **01** module rack MT08-2G
  - **02** module rack MT16-2G
  - **04** module rack MT08-3G
  - **05** module rack MT16-3G
  - **06** module rack MT24-3G
  - **07** module rack MT08-N
  - **08** module rack MT16-N
  - **09** module rack MT24-N
  - **10** module rack MT16-2G/MSA

0 Upstream sub-rack

- **Upstream sub-rack**
  - **0** without upstream sub-rack MT-PPS
  - **1** with upstream sub-rack MT-PPS

0 Segment coupler **/**

- **Segment coupler**
  - **0** without installed OC11 segment coupler
  - **1** with installed OC11 segment coupler
  - **2** with two installed OC11 segment couplers

2GD System enclosure **.** **...** Special number

- **System enclosure**
  - **2GD** system enclosure category 2 for installation in zone 1 and 21
  - **3GD** system enclosure category 3 for installation in zone 2 and 22
  - **–** without labelling: system enclosure for mounting in the non-Ex area (non-hazardous area)
- **Special number**
  - **...** special number for all extra fitments such as trace heating, circuit breaker, fuses or lightning components







The system enclosures of the EG-VA series contain a module rack, either with 16 or 24 slots. The enclosures are made of stainless steel, feature ignition protection type Ex-e and allow installation in zone 1 even in harsh and aggressive environments. In order to save the user the trouble of getting approvals for each system component, TURCK has obtained a single system approval for the stainless steel enclosures with integrated module rack. All components used have been individually tested and approved. In this way customized solutions are also possible. Assembly and installation are carried out directly at TURCK in order to ensure that the required clearance and creepage distances are met.

Features

- Stainless steel housing with integrated module rack
- Housing door with inspection window
- Integrated module rack MT16-2G, terminal clamps (see accessories)
- Flange plate equipped with cable glands
- Dimensions (w x h x d):
  - Type 400 x 550 x 210 [mm]
  - Type 460 x 550 x 260 [mm]
  - Type 650 x 550 x 210 [mm]
  - Type 650 x 550 x 260 [mm]
  - Type 800 x 550 x 210 [mm]
  - Type 800 x 550 x 260 [mm]

excom® – Accessories

	**OC11-LINKCABLE** 8031339	Extension cable to connect two identical OC11Ex devices (2G i.e. 3G), length 0.24 m
	**D9T-RS485** 6890942	PROFIBUS bus connector for RS485, Fast Connect, without PG gland, 35° outlet
	**D9T-RS485PG** 6890943	PROFIBUS bus connector for RS485, Fast Connect, with PG gland, 35° outlet
	**D9T-RS485IS** 6890944	PROFIBUS bus connector for RS485-IS, Fast Connect, only for use with IS devices!
	**STB16-4RS/1,5-BU** 9909622	16-pcs. set: 4-pin terminal block, screw clamps blue
	**STB16-4RC/1,5-BU** 9909623	16-pcs. set: 4-pin terminal block, cage clamps blue
	**STB16-4RS/1,5-BK** 9909624	16-pcs. set: 4-pin terminal block, screw clamps black

Accessories

	**STB16-4RC/1,5-BK** 9909625	16-pcs. set: 4-pin terminal block, cage clamps black
	**ELST-M20EX** 6884033	Pressure compensation element (plastic), prevents condensation inside the housing
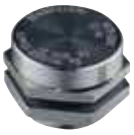	**ELVA-M20EX** 6884110	Pressure compensation element (stainless steel), prevents condensation inside the housing
	**SK8** 6900360	Shield terminal for bus bars
	**BM-PS** 6884044	Closure cap for redundant power supply slot in zone 1
	**BM1** 6884036	Dummy module for unused slots on the module rack, version 1
	**BM-N** 6884226	Dummy module for unused slots on the module rack, version N

excom® – Accessories

	**MODEX-SCHALTKLEMME** 6884069	Switching terminal for manual switching in Ex areas (enable function for downstream connected devices)
	**MODEX-TRENNRELAIS** 6884070	Isolating relay for the connection of non-intrinsically safe circuits (e.g. Ex e valves with auxiliary voltage)

Accessories

Interface technology



Interface technology

The TURCK Interface technology program offers a complete range of functions, designs and variants for isolating, conditioning, processing, converting and matching digital and analog signals in control and automation. The various designs meet the highest industrial standards and ensure flexibility in the planning, construction and expansion of industrial plants:

- IM series – Universally applicable devices for DIN rail mounting with universal power supply unit and removable terminal blocks
- IMS series – Slim 6.2 mm modular housing for DIN rail mounting as analog signal isolators and temperature measuring amplifiers
- IME series – For DIN rail mounting, for high efficiency with reduced cabling and power consumption
- IMC series – In a compact IP67 housing with rich functionality for distributed use directly in the field

IM/IME/IMS/IMSP – Modular housings



IM, IME, IMS and IMSP series – interface technology in modular housings

The interface modules of the IM, IME, IMS and IMSP series are integrated in a compact modular housing that can be snap fitted easily onto a DIN EN 60715 mounting rail. The devices can be mounted horizontally or vertically next to each other. The 1 and 2-channel IMS modules (Interface Module Small) are only 6.2 mm wide and offer galvanic isolation, signal conditioning and temperature measuring with maximum packing density. The compact surge protection devices of the IMSP series are also only 6.2 mm wide and are connected in front of the corresponding interface modules. The 18 or 27 mm wide devices of the IM series are particularly versatile thanks to a wide range of functions and parameter setting options. Equipped with a universal voltage power supply unit with 20…250 VUC and 20…250 VAC/20…125 VDC for Ex devices, the modules of the IM series can be connected to virtually any industrial supply network.

Type	Ident No.	Description	Page
IM1-12EX-MT	7541228	Isolating switching amplifier, 1-channel	302
IM1-12EX-R	7541226	Isolating switching amplifier, 1-channel	304
IM1-12EX-T	7541227	Isolating switching amplifier, 1-channel	306
IM1-12-T	7541268	Isolating switching amplifier, 1-channel	308
IM1-121EX-R	7541229	Isolating switching amplifier, 1-channel	310
IM1-121EX-T	7541230	Isolating switching amplifier, 1-channel	312
IM1-22EX-MT	7541213	Isolating switching amplifier, 2-channel	314
IM1-22EX-R	7541231	Isolating switching amplifier, 2-channel	316
IM1-22EX-T	7541232	Isolating switching amplifier, 2-channel	318
IM1-22EX-R/K51	7541238	Isolating switching amplifier, 2-channel	320
IM1-22-R	7541234	Isolating switching amplifier, 2-channel	322
IM12-22EX-R	7541233	Isolating switching amplifier, 2-channel	324
IM12-22EX-R/230VAC	7505641	Isolating switching amplifier, 2-channel	326
IM12-22EX-R/24VDC	7505640	Isolating switching amplifier, 2-channel	328
IM1-231EX-R	7541239	Isolating switching amplifier, 2-channel	330
IM1-451-R	7541190	Isolating switching amplifier, 4-channel	332
IM1-451-T	7520721	Isolating switching amplifier, 4-channel	334
IM1-451EX-R	7541188	Isolating switching amplifier, 4-channel	336
IM1-451EX-T	7541189	Isolating switching amplifier, 4-channel	338
IM21-14-CDTRI	7505650	Rotation speed monitor, 1-channel	340
IM21-14EX-CDTRI	7505651	Rotation speed monitor, 1-channel	342
IM31-11EX-I	7506320	Input analog signal isolator, 1-channel	344
IM31-11EX-U	7506327	Input analog signal isolator, 1-channel	346
IM31-11-I	7506323	Input analog signal isolator, 1-channel	348

Modular housings

Type	Ident No.	Description	Page
IM31-12-I	7506324	Input analog signal isolator, 1-channel – Signal duplicating	350
IM31-12EX-I	7506321	Input analog signal isolator, 1-channel – Signal duplicating	352
IM31-22-I	7506325	Input analog signal isolator, 2-channel	354
IM31-22EX-I	7506322	Input analog signal isolator, 2-channel	356
IM31-22EX-U	7506326	Input analog signal isolator, 2-channel	358
IM33-11-HI/24VDC	7506447	HART® isolating transducer, 1-channel	360
IM33-11EX-HI/24VDC	7506440	HART® isolating transducer, 1-channel	362
IM33-FSD-EX/L	7506433	Isolating transducer, 1-channel	364
IM33-12EX-HI/24VDC	7506446	HART® isolating transducer, 1-channel	366
IM33-11EX-HI	7506443	HART® isolating transducer, 1-channel	368
IM33-14EX-CDRI	7560015	HART® isolating transducer, 1-channel	370
IM33-12EX-HI	7506444	HART® isolating transducer, 1-channel	372
IM33-22-HI/24VDC	7506564	HART® isolating transducer, 2-channel	374
IM33-22EX-HI/24VDC	7506441	HART® isolating transducer, 2-channel	376
IM33-22EX-HI	7506445	HART® isolating transducer, 2-channel	378
IM34-11-CI	7506638	Temperature measuring amplifier, 1-channel	380
IM34-11EX-CI	7506633	Temperature measuring amplifier, 1-channel	382
IM34-11EX-I	7506630	Temperature measuring amplifier, 1-channel	384
IM34-11Ex-CI/24VDC	7506637	Temperature measuring amplifier, 1-channel	386
IM34-12EX-CRI	7506632	Temperature measuring amplifier, 1-channel	388
IM34-12EX-RI	7506631	Temperature measuring amplifier, 1-channel	390
IM34-12Ex-CRi/K63	7506605	Temperature measuring amplifier, 1-channel	392
IM34-11EX-CI/K51	7506635	Temperature measuring amplifier, 1-channel	394
IM34-11EX-CI/K60	7506636	Temperature measuring amplifier, 1-channel	396
IM34-14EX-CDRI	7506634	Temperature measuring amplifier, 1-channel	398
IM35-11EX-HI/24VDC	7506516	Ouput analog signal isolator, 1-channel	400
IM35-22EX-HI/24VDC	7506515	Ouput analog signal isolator, 2-channel	402
IM35-11EX-HI	7506517	Ouput analog signal isolator, 1-channel	404
IM35-22EX-HI	7506518	Ouput analog signal isolator, 2-channel	406
IM36-11EX-I/24VDC	7509525	Potentiometer amplifier, 1-channel	408
IM36-11EX-U/24VDC	7509526	Potentiometer amplifier, 1-channel	410
IM36-22EX-I	7509528	Potentiometer amplifier, 2-channel	412
IM36-22EX-U	7509530	Potentiometer amplifier, 2-channel	414
IM43-14-SRI	7540043	Trip amplifier, 1-channel	416
IM43-14-RI	7540042	Trip amplifier, 1-channel	418
IM43-13-SR	7540041	Trip amplifier, 1-channel	420
IM43-13-R	7540040	Trip amplifier, 1-channel	422
IM43-14-CDRI	7540045	Trip amplifier, 1-channel	424
IM72-11EX/L	7520703	Solonoid driver, 1-channel	426
IM72-22EX/L	7520702	Solonoid driver, 2-channel	428

IM/IME/IMS/IMSP – Modular housings

Type	Ident No.	Description	Page
IM73-12-R/230VAC	7520511	Relay coupler, 1-channel	430
IM73-12-R/24VUC	7520712	Relay coupler, 1-channel	432
IM73-22Ex-R/24VUC	7520513	Relay coupler, 2-channel	434
IM82-24-2.5	7545041	Power supply	436
IM82-24-5.0	7545042	Power supply	438
IM82-24-10	7545043	Power supply	440
IM82-24-20	7545044	Power supply	442
IME-DI-22EX-T/24VDC	7541197	Isolating switching amplifier, 2-channel	444
IME-DI-22Ex-R/24VDC	7541191	Isolating switching amplifier, 2-channel	446
IME-Ai-11Ex-Hi/L	7541192	Input analog signal isolator, 1-channel	448
IME-AI-11Ex-Hi/24VDC	7541198	Input analog signal isolator, 1-channel	450
IME-AiA-11Ex-Hi/24VDC	7541193	HART® isolating transducer, 1-channel	452
IME-TI-11Ex-Ci/24VDC	7541199	Temperature measuring amplifier, 1-channel	454
IME-AO-11Ex-Hi/L	7541194	Ouput analog signal isolator, 1-channel	456
IME-DO-11EX/L	7541196	Solonoid driver, 1-channel	458
IME-DO-22EX/L	7541195	Solonoid driver, 2-channel	460
IMS-AI-UNI/24V	7504009	Input analog signal isolator, 1-channel	462
IMS-AI-DLI-22-DLI/L	7504011	Input analog signal isolator, 2-channel	464
IMS-TI-PT100/24V	7504012	Temperature measuring amplifier, 1-channel	466
IMSP-1x2-24	7504050	Surge protection – 1 floating signal circuit	468
IMSP-2-12	7504054	Surge protection – 2 floating signal wires	470
IMSP-2-24	7504052	Surge protection – 2 floating signal wires	472
IMSP-2x2-24	7504051	Surge protection – 2 floating signal circuits	474
IMSP-4-24	7504053	Surge protection – 4 floating signal wires	476
IMSP-4-12	7504055	Surge protection – 4 floating signal wires	478

Modular housings

Devices with SIL evaluation

Type	Ident No.	Description	SIL evaluation	Page
IM1-12EX-R	7541226	Isolating switching amplifier, 1-channel	2	304
IM1-12EX-T	7541227	Isolating switching amplifier, 1-channel	2	306
IM1-12-T	7541268	Isolating switching amplifier, 1-channel	2	308
IM1-121EX-R	7541229	Isolating switching amplifier, 1-channel	2	310
IM1-121EX-T	7541230	Isolating switching amplifier, 1-channel	2	312
IM1-22EX-R	7541231	Isolating switching amplifier, 2-channel	2	316
IM1-22EX-T	7541232	Isolating switching amplifier, 2-channel	2	318
IM1-22-R	7541234	Isolating switching amplifier, 2-channel	2	322
IM33-11-HI/24VDC	7506447	HART® isolating transducer, 1-channel	2	360
IM33-11EX-HI/24VDC	7506440	HART® isolating transducer, 1-channel	2	362
IM33-12EX-HI/24VDC	7506446	HART® isolating transducer, 1-channel	2	366
IM33-22-HI/24VDC	7506564	HART® isolating transducer, 2-channel	2	374
IM33-22EX-HI/24VDC	7506441	HART® isolating transducer, 2-channel	2	376
IM35-11EX-HI/24VDC	7506516	Ouput analog signal isolator, 1-channel	2	400
IM35-22EX-HI/24VDC	7506515	Ouput analog signal isolator, 2-channel	2	402
IM72-11EX/L	7520703	Solonoid driver, 1-channel	3	426
IM72-22EX/L	7520702	Solonoid driver, 2-channel	3	428
IM73-12-R/230VAC	7520511	Relay coupler, 1-channel	3	430
IM73-12-R/24VUC	7520712	Relay coupler, 1-channel	3	432
IME-DI-22EX-T/24VDC	7541197	Isolating switching amplifier, 2-channel	2	444
IME-DI-22Ex-R/24VDC	7541191	Isolating switching amplifier, 2-channel	2	446
IME-Ai-11Ex-Hi/L	7541192	Input analog signal isolator, 1-channel	2	448
IME-AI-11Ex-Hi/24VDC	7541198	Input analog signal isolator, 1-channel	2	450
IME-AO-11Ex-Hi/L	7541194	Ouput analog signal isolator, 1-channel	2	456
IME-DO-11EX/L	7541196	Solonoid driver, 1-channel	3	458
IME-DO-22EX/L	7541195	Solonoid driver, 2-channel	3	460
IMSP-1x2-24	7504050	Surge protection – 1 floating signal circuit	2	468
IMSP-2-12	7504054	Surge protection – 2 floating signal wires	2	470
IMSP-2-24	7504052	Surge protection – 2 floating signal wires	2	472
IMSP-2x2-24	7504051	Surge protection – 2 floating signal circuits	2	474
IMSP-4-24	7504053	Surge protection – 4 floating signal wires	2	476
IMSP-4-12	7504055	Surge protection – 4 floating signal wires	2	478

Our Strengths – Your Advantages

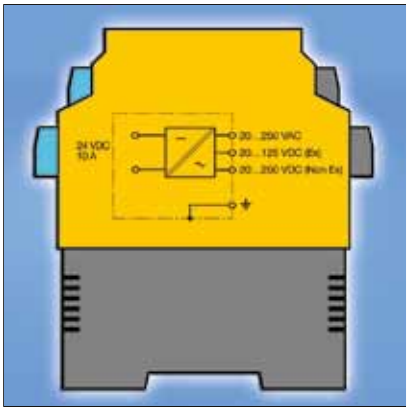

Universal power supply unit – One for all

As the IM modules are designed for a voltage range between 20…250 VUC and 20…250 VAC/20…125 VDC for Ex devices, they can be connected to any industrial supply network. This therefore considerably simplifies device selection, stock-keeping and spare parts management. TURCK's universal power supply units offer reliable protection against undervoltage and overvoltage, offer sufficient power reserves and also meet explosion protection requirements. Another benefit of the modern interface devices is their flexibility and simple use: The modules just have two terminals for the power supply. The terminals can be connected to both an AC and DC power supply. A bipolar DC power supply connection is also possible.



Removable terminal blocks – Simple and error-free installation

The interface modules of the IM series feature removable terminals to simplify the design, conversion and maintenance of installations. This makes handling easier for installations, prevents wiring errors when replacing devices and reduces mounting and associated costs. The devices are available with screw and cage clamp terminals and provide a highly accessible terminal chamber for cable cross sections up to 2.5 mm² (14 AWG). The male connectors are coded with red pins in order to prevent the incorrect connection of a terminal block.



Slim design, multichannel devices – High packing density

The isolation, conditioning, processing, conversion and matching of digital and analog signals – these are offered by the IM and IMS series in a compact, space saving design, also in two and 4-channel versions. The universal IM series offers the complete solution range in a snap-on modular housing, with a depth of only 110 mm, and a width of 18 mm or 27 mm. With a mounting width of only 6.2 mm and a signal adaption function that can be set easily by DIP switches, the 1 and 2-channel IMS modules set new standards in terms of channel density and flexibility. The devices can be mounted directly next to each other. This saves space in the control cabinet without any loss in the usual level of user-friendliness and reliability.



Screw and snap fastening – Flexible mounting

The IM and IMS series interface modules are designed for snap-on mounting on DIN rails acc. to DIN EN 60715. Screw fastening on a mounting plate is also possible. The devices can be mounted horizontally or vertically next to each other.



Different operating concepts – The right one for any application

In daily routine tasks, the simple handling of interface devices is critical. For this an interface device should have precisely the range of functions that the user requires for his application. In order to meet all requirements in terms of handling, commissioning and diagnostics, the interface program offers a selection of different operating concepts, suitably packaged in the required design. From the compact variant with DIP and rotary coding switch to teachable devices with intuitive menu guidance in the display, to modules with convenient parameter setting and diagnostics, to FDT/DTM technology – a tailored solution for every requirement.

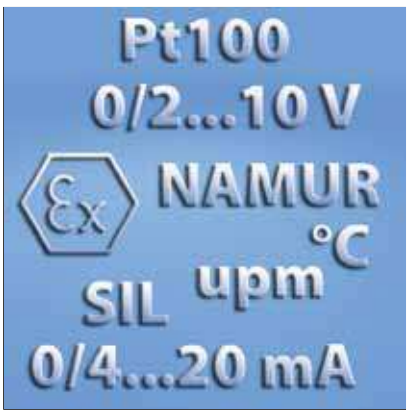

Wide selection range – Tailored solutions

The interface modules of the IM series provide you with the flexibility and versatility you need in order to create tailored solutions for your application: compact designs, flexible operating concepts and configurations, as well as a wide range of functions for isolating, conditioning, processing, converting and matching digital and analog signals in 1 to 4-channel versions. The program also includes solution for the Ex area and devices with SIL certification. Regardless of whether for standard or special applications, for simple or complex requirements, with manual setting or PC programming, with status indication or differentiated diagnostic functions: The IM series is suitable for universal use and covers the entire range of high performance tasks in interface technology.

Type code

IM 12 - 2 2 1 Ex - MT / 24VDC

IM Design
- **IM** Interface module

12 Functional principle
- **1** – isolating switching amplifier with line monitoring
- **1 2** isolating switching amplifier without line monitoring
- **2 1** rotation speed monitor/ frequency converter
- **3 1** analog input amplifier
- **3 3** isolating transducer
- **3 4** temperature amplifier
- **3 5** analog output amplifier
- **3 6** potentiometer amplifier
- **4 3** limit value indicator
- **7 2** digital output/ valve control module
- **7 3** relay coupling module

- 2 2 1 Number of channels

Number of additional outputs
- **1** e.g. additional alarm output

Number of channels on control side
- **1** one output channel
- **2** two output channels
- **3** three output channels
- **4** four output channels
- **5** five output channels

Number of channels on field side
- **1** one input channel
- **2** two input channels
- **4** four input channels

82 – 24 – 2,5 Power supply

Nominal current [mA]
- **2,5** 2.5 mA
- **5** 5 mA
- **10** 10 mA
- **20** 20 mA

Output voltage [VDC]
- **24** 24 VDC

Power supply
- **82** Power supply

Hans Turck GmbH & Co. KG ▪ Tel. +49 208 49 52-0 ▪ Fax +49 208 49 52-264

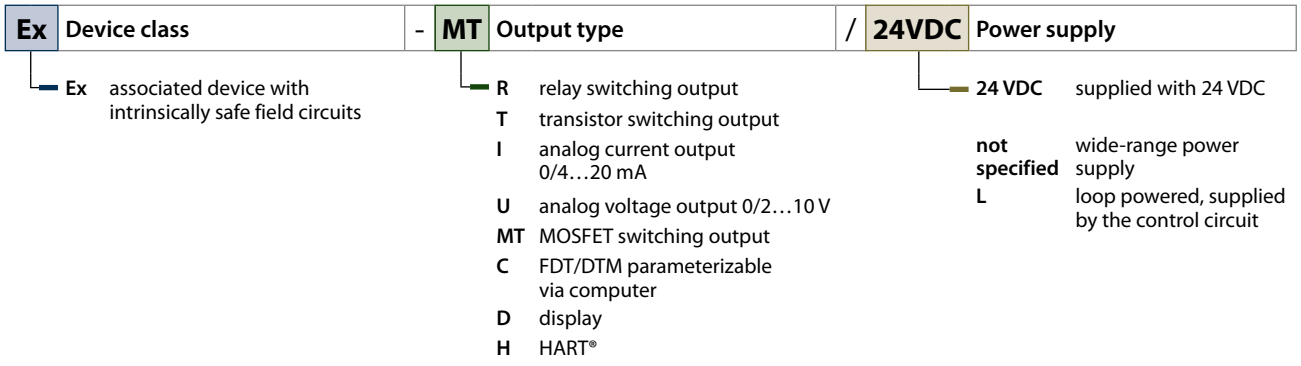
Ex
Device class
-
MT
Output type
/
24VDC
Power supply
Ex associated device with intrinsically safe field circuits
R relay switching output
T transistor switching output
I analog current output 0/4…20 mA
U analog voltage output 0/2…10 V
MT MOSFET switching output
C FDT/DTM parameterizable via computer
D display
H HART®
24 VDC supplied with 24 VDC
not specified wide-range power supply
L loop powered, supplied by the control circuit

Isolating switching amplifier, 1-channel

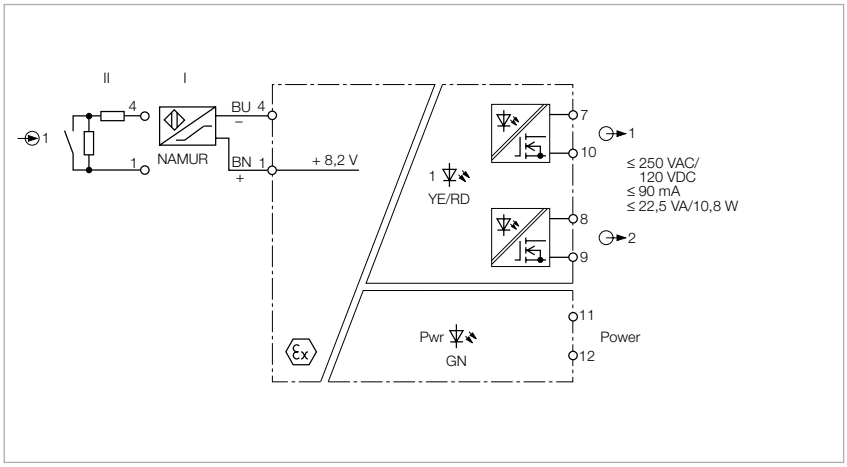

Features

- ATEX, IECEx, UL, $_{C}FM_{US}$, CSA, TR CU, NEPSI, KOSHA, TIIS, CCOE
- Installation in zone 2
- 2 transistor outputs (MOSFET)
- Output mode adjustable (NO/NC mode)
- Input circuits monitored for wire-break and short-circuit
- Complete galvanic isolation

The 1-channel isolating switching amplifier IM1-12EX-MT is equipped with an intrinsically safe input circuit.

Sensors according to EN 60947-5-6 (NAMUR) or potential-free contact transmitters can be connected to the device.

The output circuits feature two potential-free and parallel controlled MOSFET transistors for switching voltages of up to 250 VAC at a maximum frequency of 1 kHz.

You can set each channel separately to work/closed current, i.e. NO/NC mode and duplicate signals via 3 switches on the front. The switching state of channel 1 is thereby transmitted to the outputs 1 and 2. You can also set the output mode separately for each channel.

You can also set the output mode separately for each channel.

The Pwr LED lights green to indicate operational readiness. The 2-color LED 1 lights yellow to indicate the switching status of the associated output. In the event of an input circuit error, the associated 2-color LED turns red, provided the input circuit monitoring function is activated. Thereupon the MOSFET outputs are blocked.

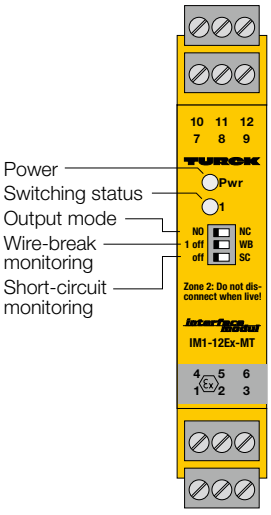

Technical data

Type	IM1-12EX-MT
Ident no.	7541228

Power supply

Nominal voltage	Universal voltage supply unit
Operating voltage range	20…125 VDC
Operating voltage range	20…250 VAC
Frequency	40…70 Hz
Power consumption	≤ 3 W

Inputs

No-load voltage	8.2 VDC
Short-circuit current	8.2 mA
Input resistance	1 kΩ
Cable resistance	≤ 50 Ω
Switch-on threshold	1.55 mA
Switch-off threshold	1.75 mA
Short-circuit threshold	≥ 6 mA
Wire breakage threshold	≤ 0.1 mA

Outputs

Output circuits (digital)	2 x MOSFET (potential-free, short-circuit proof)
Switching voltage	≤ 250 VAC/120 VDC
Switching current per output	≤ 90 mA
Switching frequency	≤ 1000 Hz

Approvals and declarations

Ex approval acc. to conformity certificate	TÜV 04 ATEX 2553
Device designation	Ⓔx II (1) G, II (1) D [Ex ia Ga] IIC; [Ex ia Da] IIIC
Max. values:	Terminal connection: 1+4
Max. output voltage U_o	≤ 9.6 V
Max. output current I_o	≤ 11 mA
Max. output power P_o	≤ 26 mW
Rated voltage	250 V
Characteristic	linear
Internal inductance/capacitance L_i/C_i	L_i = 65 µH, C_i negligibly small

External inductance/capacitance L_o/C_o

Ex ia	IIC			IIB		
L_o [mH]	1	5	10	2	10	20
C_o [µF]	1.1	0.83	0.74	5.2	3.8	3.4

Ex approval acc. to conformity certificate	TÜV 06 ATEX 552968 X
Application area	II 3 G
Protection type	Ex nA [ic Gc] IIC/IIB T4 Gc
Max. values:	Terminal connection: 1+4
Max.output voltage U_o	≤ 9.6 V
Max. output current I_o	≤ 11 mA
Max. output power P_o	≤ 26 mW
Characteristic	linear
Internal inductance/capacitance L_i/C_i	L_i = 65 µH, C_i negligibly small

External inductance/capacitance L_o/C_o

Ex ic	IIC			IIB		
L_o [mH]	1	5	10	1	5	10
C_o [µF]	1.9	1.4	1.2	11	7.5	6.6

Indication

Operational readiness	green
Switching state	yellow
Error indication	red

Environmental Conditions

Ambient temperature	-25…+70 °C
Storage temperature	-40…+80 °C
Relative humidity	≤ 95 %
Test voltage	2.5 kV

Mechanical data

Tightening torque	0.5 Nm
Electrical connection	4 x 3-pin removable terminal blocks, reverse polarity protected, screw connection
Terminal cross-section	1 x 2.5 mm² / 2 x 1.5 mm²
Housing material	Polycarbonate/ABS
Mounting instruction	for DIN rail / panel
Protection class	IP20
Flammability class acc. to UL 94	V-0
Dimensions	18 x 104 x 110 mm

Approval | Certification	ATEX, IECEx, UL, $_cFM_{us}$, CSA, TR CU, NEPSI, KOSHA, TIIS, CCOE

Isolating switching amplifier, 1-channel

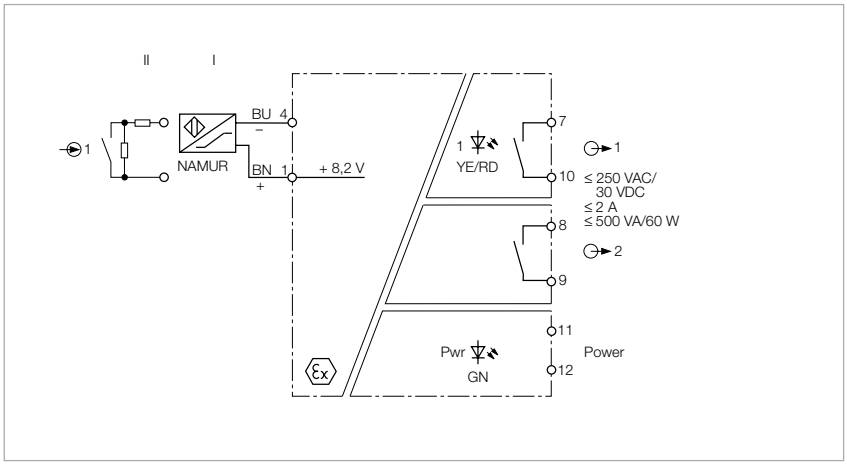

Features

- ATEX, IECEx, UL, $_{C}FM_{US}$, CSA, TR CU, NEPSI, KOSHA, TIIS, CCOE
- Installation in zone 2
- 2 relay outputs (NO)
- Output mode adjustable (NO/NC mode)
- Input circuits monitored for wire-break and short-circuit
- Complete galvanic isolation

The 1-channel isolating switching amplifier IM1-12EX-R is equipped with an intrinsically safe input circuit.

Sensors according to EN 60947-5-6 (NAMUR) or potential-free contact transmitters can be connected to the device.

The output circuit features two relays, each with NO contact.

You can set each channel separately to work/closed current, i.e. NO/NC mode and duplicate signals via 3 switches on the front. The switching state of channel 1 is thereby transmitted to the outputs 1 and 2. You can also set the output mode separately for each channel.

You can also set the output mode separately for each channel.

The Pwr LED lights green to indicate operational readiness. The 2-color LED 1 lights yellow to indicate the switching status of the associated output. In the event of an input circuit error, the associated 2-color LED turns red, provided the input circuit monitoring function is activated. Thereupon the output relays drop out.

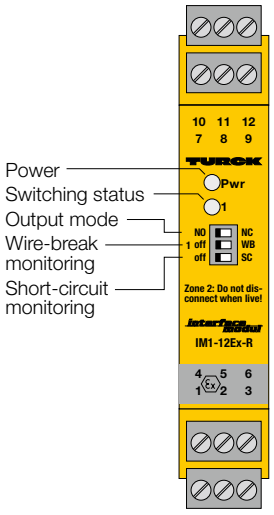

Output relay – Load curve

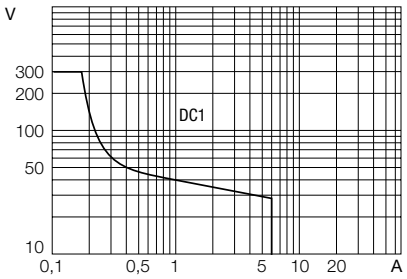

Output relay – Electrical lifetime

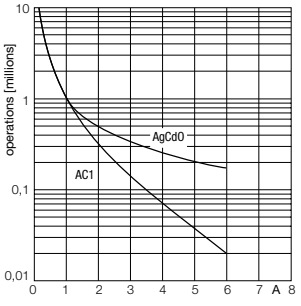

Hans Turck GmbH & Co. KG ▪ Tel. +49 208 49 52-0 ▪ Fax +49 208 49 52-264

Technical data

Type	IM1-12EX-R
Ident no.	7541226

Power supply

Nominal voltage	Universal voltage supply unit
Operating voltage range	20…125 VDC
Operating voltage range	20…250 VAC
Frequency	40…70 Hz
Power consumption	≤ 3 W

Inputs

No-load voltage	8.2 VDC
Short-circuit current	8.2 mA
Input resistance	1 kΩ
Cable resistance	≤ 50 Ω
Switch-on threshold	1.55 mA
Switch-off threshold	1.75 mA
Short-circuit threshold	≥ 6 mA
Wire breakage threshold	≤ 0.1 mA

Outputs

Output circuits (digital)	2 x relays (NO)
Switching frequency	≤ 10 Hz
Relay switching voltage	≤ 250 VAC/120 VDC
Switching current per output	≤ 2 A
Switching capacity per output	≤ 500 VA/60 W
Contact quality	AgNi, 3µ Au

Approvals and declarations

Ex approval acc. to conformity certificate	TÜV 04 ATEX 2553
Device designation	Ⓔx II (1) G, II (1) D [Ex ia Ga] IIC; [Ex ia Da] IIIC
Max. values:	Terminal connection: 1+4
Max. output voltage U_o	≤ 9.6 V
Max. output current I_o	≤ 11 mA
Max. output power P_o	≤ 26 mW
Rated voltage	250 V
Characteristic	linear
Internal inductance/capacitance L_i/C_i	L_i = 65 µH, C_i negligibly small

External inductance/capacitance L_o/C_o

Ex ia	IIC			IIB		
L_o [mH]	1	5	10	2	10	20
C_o [µF]	1.1	0.83	0.74	5.2	3.8	3.4

Ex approval acc. to conformity certificate	TÜV 06 ATEX 552968 X
Application area	II 3 G
Protection type	Ex nA nC [ic Gc] IIC/IIB T4 Gc
Max. values:	Terminal connection: 1+4
Max.output voltage U_o	≤ 9.6 V
Max. output current I_o	≤ 11 mA
Max. output power P_o	≤ 26 mW
Characteristic	linear
Internal inductance/capacitance L_i/C_i	L_i = 65 µH, C_i negligibly small

External inductance/capacitance L_o/C_o

Ex ic	IIC			IIB		
L_o [mH]	1	5	10	1	5	10
C_o [µF]	1.9	1.4	1.2	11	7.5	6.6

Declaration	SIL 2 acc. to EXIDA FMEDA

Indication

Operational readiness	green
Switching state	yellow
Error indication	red

Environmental Conditions

Ambient temperature	-25…+70 °C
Storage temperature	-40…+80 °C
Relative humidity	≤ 95 %
Test voltage	2.5 kV
MTTF	272 years acc. to SN 29500 (Ed. 99) 40 °C

Mechanical data

Tightening torque	0.5 Nm
Electrical connection	4 x 3-pin removable terminal blocks, reverse polarity protected, screw connection
Terminal cross-section	1 x 2.5 mm² / 2 x 1.5 mm²
Housing material	Polycarbonate/ABS
Mounting instruction	for DIN rail / panel
Protection class	IP20
Flammability class acc. to UL 94	V-0
Dimensions	18 x 104 x 110 mm

Approval | Certification	ATEX, IECEx, UL, $_cFM_{us}$, CSA, TR CU, NEPSI, KOSHA, TIIS, CCOE

Isolating switching amplifier, 1-channel

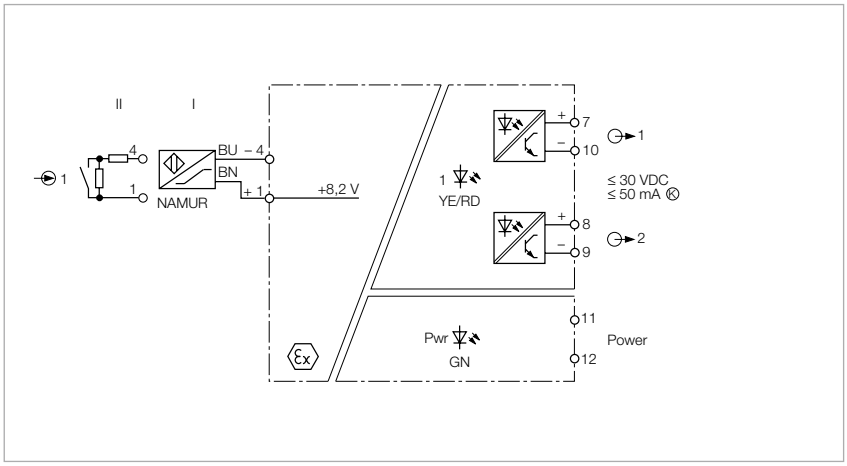

Features

- ATEX, IECEx, UL, $_{C}FM_{US}$, CSA, TR CU, NEPSI, KOSHA, TIIS, CCOE
- Installation in zone 2
- 2 transistor outputs, short-circuit proof, potential-free and reverse-polarity protected
- Output mode adjustable (NO/NC mode)
- Input circuits monitored for wire-break/short-circuit (ON/OFF switchable)
- Complete galvanic isolation

The 1-channel isolating switching amplifier IM1-12EX-T is equipped with an intrinsically safe input circuit.

Sensors according to EN 60947-5-6 (NAMUR) or potential-free contact transmitters can be connected to the device.

The output circuits feature 2 potential-free and short-circuit protected transistors.

You can set each channel separately to work/closed current, i.e. NO/NC mode and duplicate signals via 3 switches on the front. The switching state of channel 1 is thereby transmitted to the outputs 1 and 2. You can also set the output mode separately for each channel.

You can also set the output mode separately for each channel.

The Pwr LED lights green to indicate operational readiness. The 2-color LED 1 lights yellow to indicate the switching status of the associated output. In the event of an input circuit error, the associated 2-color LED turns red, provided the input circuit monitoring function is activated. Thereupon the output transistors are blocked.

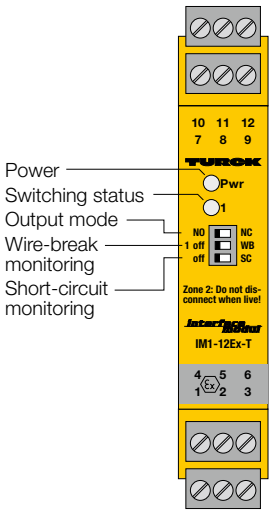

Technical data

Type	IM1-12EX-T
Ident no.	7541227

Power supply

Nominal voltage	Universal voltage supply unit
Operating voltage range	20…125 VDC
Operating voltage range	20…250 VAC
Frequency	40…70 Hz
Power consumption	≤ 3 W

Inputs

No-load voltage	8.2 VDC
Short-circuit current	8.2 mA
Input resistance	1 kΩ
Cable resistance	≤ 50 Ω
Switch-on threshold	1.55 mA
Switch-off threshold	1.75 mA
Short-circuit threshold	≥ 6 mA
Wire breakage threshold	≤ 0.1 mA

Outputs

Output circuits (digital)	2 x transistor (potential-free, short-circuit proof)
Switching voltage	≤ 30 VDC
Switching current per output	≤ 50 mA
Switching frequency	≤ 5000 Hz
Voltage drop	≤ 2.5 V

Approvals and declarations

Ex approval acc. to conformity certificate	TÜV 04 ATEX 2553
Device designation	Ⓔx II (1) G, II (1) D [Ex ia Ga] IIC; [Ex ia Da] IIIC
Max. values:	Terminal connection: 1+4
Max. output voltage U_o	≤ 9.6 V
Max. output current I_o	≤ 11 mA
Max. output power P_o	≤ 26 mW
Rated voltage	250 V
Characteristic	linear
Internal inductance/capacitance L_i/C_i	L_i = 65 µH, C_i negligibly small

External inductance/capacitance L_o/C_o

Ex ia	IIC			IIB		
L_o [mH]	1	5	10	2	10	20
C_o [µF]	1.1	0.83	0.74	5.2	3.8	3.4

Ex approval acc. to conformity certificate	TÜV 06 ATEX 552968 X
Application area	II 3 G
Protection type	Ex nA [ic Gc] IIC/IIB T4 Gc
Max. values:	Terminal connection: 1+4
Max.output voltage U_o	≤ 9.6 V
Max. output current I_o	≤ 11 mA
Max. output power P_o	≤ 26 mW
Characteristic	linear
Internal inductance/capacitance L_i/C_i	L_i = 65 µH, C_i negligibly small

External inductance/capacitance L_o/C_o

Ex ic	IIC			IIB		
L_o [mH]	1	5	10	1	5	10
C_o [µF]	1.9	1.4	1.2	11	7.5	6.6

Declaration	SIL 2 acc. to EXIDA FMEDA

Indication

Operational readiness	green
Switching state	yellow
Error indication	red

Environmental Conditions

Ambient temperature	-25…+70 °C
Storage temperature	-40…+80 °C
Relative humidity	≤ 95 %
Test voltage	2.5 kV
MTTF	314 years acc. to SN 29500 (Ed. 99) 40 °C

Mechanical data

Tightening torque	0.5 Nm
Electrical connection	4 x 3-pin removable terminal blocks, reverse polarity protected, screw connection
Terminal cross-section	1 x 2.5 mm² / 2 x 1.5 mm²
Housing material	Polycarbonate/ABS
Mounting instruction	for DIN rail / panel
Protection class	IP20
Flammability class acc. to UL 94	V-0
Dimensions	18 x 104 x 110 mm

Approval | Certification	ATEX, IECEx, UL, cFM$_{us}$, CSA, TR CU, NEPSI, KOSHA, TIIS, CCOE

Isolating switching amplifier, 1-channel

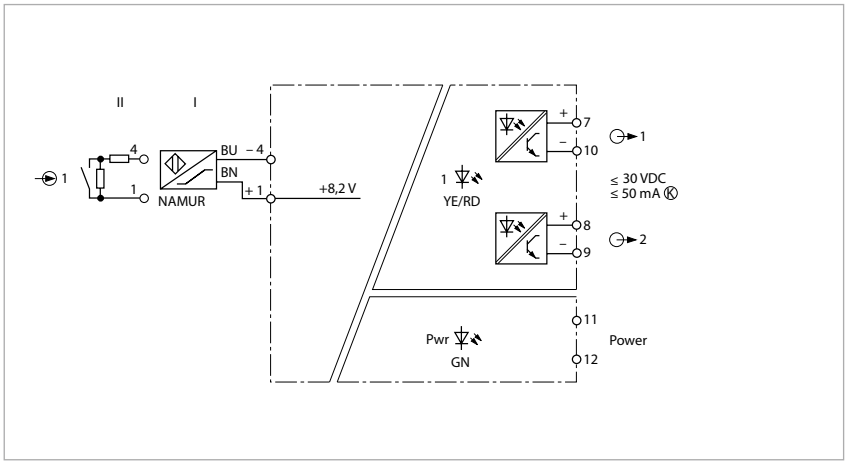

Features

- TR CU
- 2 transistor outputs, short-circuit proof, potential-free and reverse-polarity protected
- Output mode adjustable (NO/NC mode)
- Input circuits monitored for wire-break and short-circuit
- Complete galvanic isolation

The isolating switching amplifier IM1-12-T is a 1-channel device.

Sensors according to EN 60947-5-6 (NAMUR) or potential-free contact transmitters can be connected to the device.

The output circuits feature 2 potential-free and short-circuit protected transistors.

You can set each channel separately to work/closed current, i.e. NO/NC mode and duplicate signals via 3 switches on the front. The switching state of channel 1 is thereby transmitted to the outputs 1 and 2. You can also set the output mode separately for each channel.

You can also set the output mode separately for each channel.

The Pwr LED lights green to indicate operational readiness. The 2-color LED 1 lights yellow to indicate the switching status of the associated output. In the event of an input circuit error, the associated 2-color LED turns red, provided the input circuit monitoring function is activated. Thereupon the output transistors are blocked.

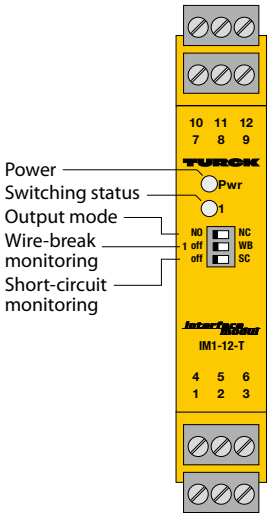

Hans Turck GmbH & Co. KG ▪ Tel. +49 208 49 52-0 ▪ Fax +49 208 49 52-264

Technical data

Type	IM1-12-T
Ident no.	7541268
Power supply	
Nominal voltage	Universal voltage supply unit
Operating voltage range	20…125 VDC
Operating voltage range	20…250 VAC
Frequency	40…70 Hz
Power consumption	≤ 3 W
Inputs	
No-load voltage	8.2 VDC
Short-circuit current	8.2 mA
Input resistance	1 kΩ
Cable resistance	≤ 50 Ω
Switch-on threshold	1.55 mA
Switch-off threshold	1.75 mA
Short-circuit threshold	≥ 6 mA
Wire breakage threshold	≤ 0.1 mA
Outputs	
Output circuits (digital)	2 x transistor (potential-free, short-circuit proof)
Switching voltage	≤ 30 VDC
Switching current per output	≤ 50 mA
Switching frequency	≤ 5000 Hz
Voltage drop	≤ 2.5 V
Approvals and declarations	
Declaration	SIL 2 acc. to EXIDA FMEDA
Indication	
Operational readiness	green
Switching state	yellow
Error indication	red
Environmental Conditions	
Ambient temperature	-25…+70 °C
Storage temperature	-40…+80 °C
Relative humidity	≤ 95 %
Test voltage	2.5 kV
Mechanical data	
Tightening torque	0.5 Nm
Electrical connection	4 x 3-pin removable terminal blocks, reverse polarity protected, screw connection
Terminal cross-section	1 x 2.5 mm² / 2 x 1.5 mm²
Housing material	Polycarbonate/ABS
Mounting instruction	for DIN rail / panel
Protection class	IP20
Flammability class acc. to UL 94	V-0
Dimensions	18 x 104 x 110 mm
Approval | Certification	TR CU

Isolating switching amplifier, 1-channel

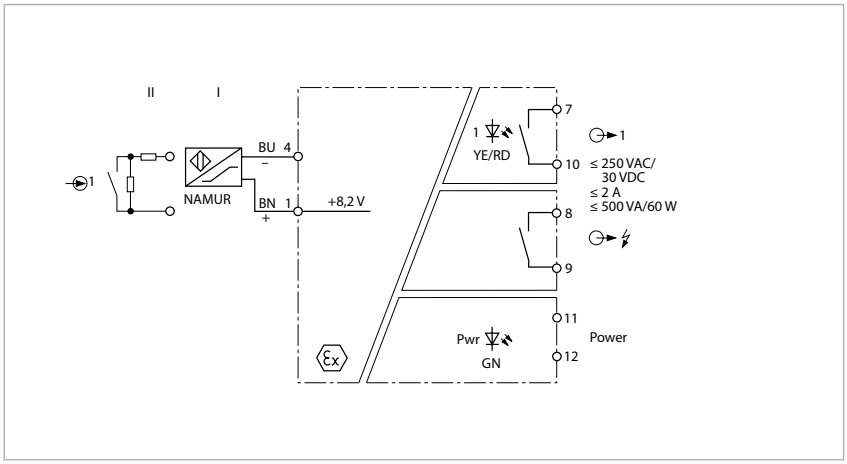

Features

- ATEX, IECEx, UL, $_{C}FM_{US}$, CSA, TR CU, NEPSI, KOSHA, TIIS, CCOE
- Installation in zone 2
- 2 relay outputs (NO)
- Output mode adjustable (NO/NC mode)
- Common alarm output
- Input circuits monitored for wire-break/short-circuit (ON/OFF switchable)
- Complete galvanic isolation

The 1-channel isolating switching amplifier IM1-12EX-R is equipped with an intrinsically safe input circuit.

Sensors according to EN 60947-5-6 (NAMUR) or potential-free contact transmitters can be connected to the device.

The output circuits feature two relays each with NO contact, one of which works as alarm output.

You can set each channel separately to work/closed current, i.e. NO/NC mode and duplicate signals via 3 switches on the front. The switching state of channel 1 is thereby transmitted to the outputs 1 and 2. You can also set the output mode separately for each channel.

You can also set the output mode separately for each channel.

The Pwr LED lights green to indicate operational readiness. The 2-color LED 1 lights yellow to indicate the switching status of the associated output. In the event of an input circuit error, the associated 2-color LED turns red, provided the input circuit monitoring function is activated. Thereupon the output and the alarm relay drop out.

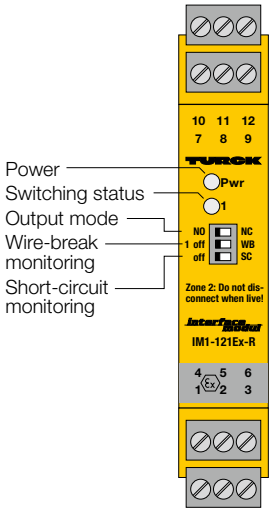

Output relay – Load curve

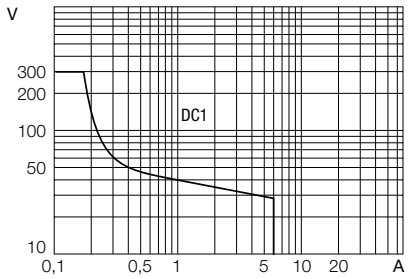

Output relay – Electrical lifetime

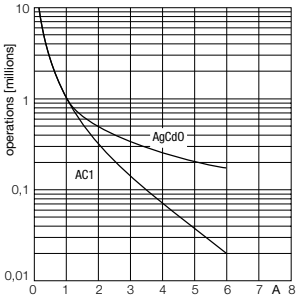

Hans Turck GmbH & Co. KG ▪ Tel. +49 208 49 52-0 ▪ Fax +49 208 49 52-264

Technical data

Type	IM1-121EX-R
Ident no.	7541229

Power supply

Nominal voltage	Universal voltage supply unit
Operating voltage range	20…125 VDC
Operating voltage range	20…250 VAC
Frequency	40…70 Hz
Power consumption	≤ 3 W

Inputs

No-load voltage	8.2 VDC
Short-circuit current	8.2 mA
Input resistance	1 kΩ
Cable resistance	≤ 50 Ω
Switch-on threshold	1.55 mA
Switch-off threshold	1.75 mA
Short-circuit threshold	≥ 6 mA
Wire breakage threshold	≤ 0.1 mA

Outputs

Output circuits (digital)	2 x relays (NO)
Switching frequency	≤ 10 Hz
Relay switching voltage	≤ 250 VAC/120 VDC
Switching current per output	≤ 2 A
Switching capacity per output	≤ 500 VA/60 W
Contact quality	AgNi, 3µ Au

Approvals and declarations

Ex approval acc. to conformity certificate	TÜV 04 ATEX 2553
Device designation	Ⓔx II (1) G, II (1) D [Ex ia Ga] IIC; [Ex ia Da] IIIC
Max. values:	Terminal connection: 1+4
Max. output voltage U_o	≤ 9.6 V
Max. output current I_o	≤ 11 mA
Max. output power P_o	≤ 26 mW
Rated voltage	250 V
Characteristic	linear
Internal inductance/capacitance L_i/C_i	L_i = 65 µH, C_i negligibly small

External inductance/capacitance L_o/C_o

Ex ia	IIC			IIB		
L_o [mH]	1	5	10	2	10	20
C_o [µF]	1.1	0.83	0.74	5.2	3.8	3.4

Ex approval acc. to conformity certificate	TÜV 06 ATEX 552968 X
Application area	II 3 G
Protection type	Ex nA nC [ic Gc] IIC/IIB T4 Gc
Max. values:	Terminal connection: 1+4
Max.output voltage U_o	≤ 9.6 V
Max. output current I_o	≤ 11 mA
Max. output power P_o	≤ 26 mW
Characteristic	linear
Internal inductance/capacitance L_i/C_i	L_i = 65 µH, C_i negligibly small

External inductance/capacitance L_o/C_o

Ex ic	IIC			IIB		
L_o [mH]	1	5	10	1	5	10
C_o [µF]	1.9	1.4	1.2	11	7.5	6.6

Declaration	SIL 2 acc. to EXIDA FMEDA

Indication

Operational readiness	green
Switching state	yellow
Error indication	red

Environmental Conditions

Ambient temperature	-25…+70 °C
Storage temperature	-40…+80 °C
Relative humidity	≤ 95 %
Test voltage	2.5 kV
MTTF	272 years acc. to SN 29500 (Ed. 99) 40 °C

Mechanical data

Tightening torque	0.5 Nm
Electrical connection	4 x 3-pin removable terminal blocks, reverse polarity protected, screw connection
Terminal cross-section	1 x 2.5 mm² / 2 x 1.5 mm²
Housing material	Polycarbonate/ABS
Mounting instruction	for DIN rail / panel
Protection class	IP20
Flammability class acc. to UL 94	V-0
Dimensions	18 x 104 x 110 mm

Approval | Certification	ATEX, IECEx, UL, cFM$_{us}$, CSA, TR CU, NEPSI, KOSHA, TIIS, CCOE

Isolating switching amplifier, 1-channel

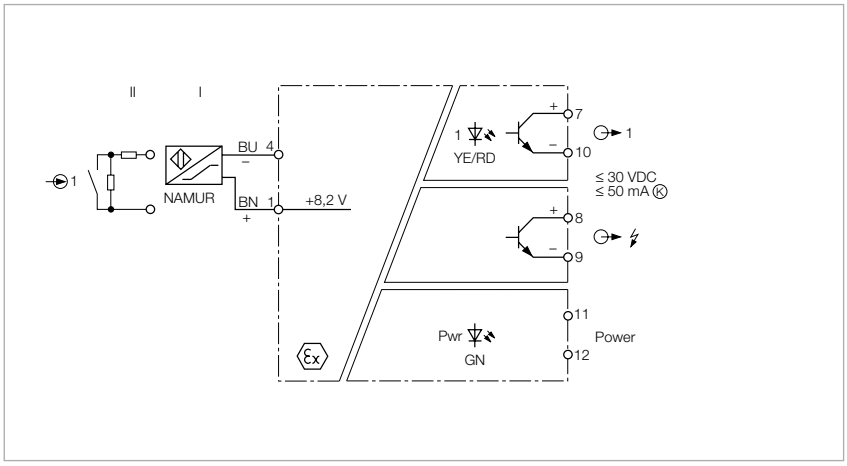

Features

- ATEX, IECEx, UL, $_{C}FM_{US}$, CSA, TR CU, NEPSI, KOSHA, TIIS, CCOE
- Installation in zone 2
- 2 transistor outputs, potential-free
- Common alarm output
- Output mode adjustable (NO/NC mode)
- Input circuits monitored for wire-break/short-circuit (ON/OFF switchable)
- Complete galvanic isolation

The 1-channel isolating switching amplifier IM1-121EX-T is equipped with an intrinsically safe input circuit.

Sensors according to EN 60947-5-6 (NAMUR) or potential-free contact transmitters can be connected to the device.

The output circuits feature two potential-free and short circuit protected transistors, one of which works as alarm output.

You can set each channel separately to work/closed current, i.e. NO/NC mode and duplicate signals via 3 switches on the front. The switching state of channel 1 is thereby transmitted to the outputs 1 and 2. You can also set the output mode separately for each channel.

You can also set the output mode separately for each channel.

The Pwr LED lights green to indicate operational readiness. The 2-color LED 1 lights yellow to indicate the switching status of the associated output. In the event of an input circuit error, the associated 2-color LED turns red, provided the input circuit monitoring function is activated. Thereupon the output and the alarm transistor are blocked.

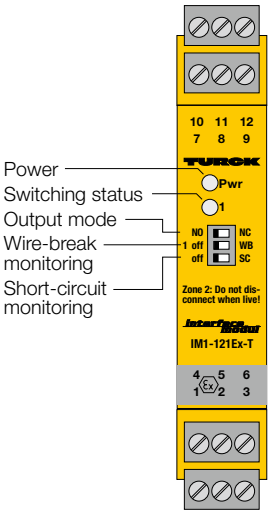

Technical data

Type	IM1-121EX-T
Ident no.	7541230

Power supply

Nominal voltage	Universal voltage supply unit
Operating voltage range	20…125 VDC
Operating voltage range	20…250 VAC
Frequency	40…70 Hz
Power consumption	≤ 3 W

Inputs

No-load voltage	8.2 VDC
Short-circuit current	8.2 mA
Input resistance	1 kΩ
Cable resistance	≤ 50 Ω
Switch-on threshold	1.55 mA
Switch-off threshold	1.75 mA
Short-circuit threshold	≥ 6 mA
Wire breakage threshold	≤ 0.1 mA

Outputs

Output circuits (digital)	2 x transistor (potential-free, short-circuit proof)
Switching voltage	≤ 30 VDC
Switching current per output	≤ 50 mA
Switching frequency	≤ 5000 Hz
Voltage drop	≤ 2.5 V

Approvals and declarations

Ex approval acc. to conformity certificate	TÜV 04 ATEX 2553
Device designation	⟨Ex⟩ II (1) G, II (1) D [Ex ia Ga] IIC; [Ex ia Da] IIIC
Max. values:	Terminal connection: 1+4
Max. output voltage U_0	≤ 9.6 V
Max. output current I_0	≤ 11 mA
Max. output power P_0	≤ 26 mW
Rated voltage	250 V
Characteristic	linear
Internal inductance/capacitance L_i/C_i	L_i = 65 µH, C_i negligibly small

External inductance/capacitance L_o/C_o

Ex ia	IIC			IIB		
L_0 [mH]	1	5	10	2	10	20
C_0 [µF]	1.1	0.83	0.74	5.2	3.8	3.4

Ex approval acc. to conformity certificate	TÜV 06 ATEX 552968 X
Application area	II 3 G
Protection type	Ex nA [ic Gc] IIC/IIB T4 Gc
Max. values:	Terminal connection: 1+4
Max.output voltage U_0	≤ 9.6 V
Max. output current I_0	≤ 11 mA
Max. output power P_0	≤ 26 mW
Characteristic	linear
Internal inductance/capacitance L_i/C_i	L_i = 65 µH, C_i negligibly small

External inductance/capacitance L_o/C_o

Ex ic	IIC			IIB		
L_0 [mH]	1	5	10	1	5	10
C_0 [µF]	1.9	1.4	1.2	11	7.5	6.6

Declaration	SIL 2 acc. to EXIDA FMEDA

Indication

Operational readiness	green
Switching state	yellow
Error indication	red

Environmental Conditions

Ambient temperature	-25…+70 °C
Storage temperature	-40…+80 °C
Relative humidity	≤ 95 %
Test voltage	2.5 kV
MTTF	314 years acc. to SN 29500 (Ed. 99) 40 °C

Mechanical data

Tightening torque	0.5 Nm
Electrical connection	4 x 3-pin removable terminal blocks, reverse polarity protected, screw connection
Terminal cross-section	1 x 2.5 mm² / 2 x 1.5 mm²
Housing material	Polycarbonate/ABS
Mounting instruction	for DIN rail / panel
Protection class	IP20
Flammability class acc. to UL 94	V-0
Dimensions	18 x 104 x 110 mm

Approval | Certification	ATEX, IECEx, UL, cFM$_{us}$, CSA, TR CU, NEPSI, KOSHA, TIIS, CCOE

Isolating switching amplifier, 2-channel

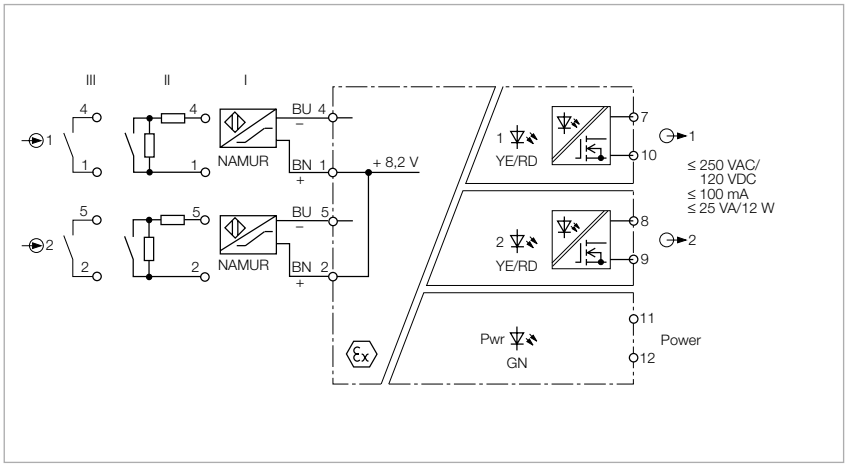

Features

- ATEX, IECEx, UL, $_{C}FM_{US}$, CSA, TR CU, NEPSI, KOSHA, TIIS, CCOE
- Installation in zone 2
- 2 transistor outputs (MOSFET)
- Output mode adjustable (NO/NC mode)
- Input circuits monitored for wire-break/short-circuit (ON/OFF switchable)
- Complete galvanic isolation

The 2-channel isolating switching amplifier IM1-22EX-MT is equipped with intrinsically safe input circuits.

Sensors according to EN 60947-5-6 (NAMUR) or potential-free contact transmitters can be connected to the device.

The output circuits feature two potential-free MOSFET transistors.

Six front panel switches are available to set the output mode separately for each channel (NO/NC mode), as well as to enable/disable wire-break (WB) and short-circuit (SC) monitoring separately.

You can also set the output mode separately for each channel.

The Pwr LED lights green to indicate operational readiness. The 2-color LEDs 1 and 2 light yellow to indicate the switching status of the associated output. In the event of an input circuit error, the 2-color LED associated to the affected input turns red, provided the input circuit monitoring function is activated. Thereupon the associated output transistor is blocked.

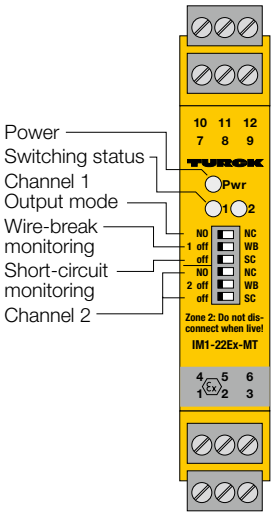

Technical data

Type	IM1-22EX-MT
Ident no.	7541213

Power supply

Nominal voltage	Universal voltage supply unit
Operating voltage range	20…125 VDC
Operating voltage range	20…250 VAC
Frequency	40…70 Hz
Power consumption	≤ 3 W

Inputs

No-load voltage	8.2 VDC
Short-circuit current	8.2 mA
Input resistance	1 kΩ
Cable resistance	≤ 50 Ω
Switch-on threshold	1.55 mA
Switch-off threshold	1.75 mA
Short-circuit threshold	≥ 6 mA
Wire breakage threshold	≤ 0.1 mA

Outputs

Output circuits (digital)	2 x MOSFET (potential-free, short-circuit proof)
Switching voltage	≤ 250 VAC/120 VDC
Switching current per output	≤ 100 mA
Switching frequency	≤ 1000 Hz

Approvals and declarations

Ex approval acc. to conformity certificate	TÜV 04 ATEX 2553
Device designation	Ⓔx II (1) G, II (1) D [Ex ia Ga] IIC; [Ex ia Da] IIIC
Max. values:	Terminal connection: 1+4 / 2+5
Max. output voltage U_o	≤ 9.6 V
Max. output current I_o	≤ 11 mA
Max. output power P_o	≤ 26 mW
Rated voltage	250 V
Characteristic	linear
Internal inductance/capacitance L_i/C_i	L_i = 65 µH, C_i negligibly small

External inductance/capacitance L_o/C_o

Ex ia	IIC			IIB		
L_o [mH]	1	5	10	2	10	20
C_o [µF]	1.1	0.83	0.74	5.2	3.8	3.4

Ex approval acc. to conformity certificate	TÜV 06 ATEX 552968 X
Application area	II 3 G
Protection type	Ex nA [ic Gc] IIC/IIB T4 Gc
Max. values:	Terminal connection: 1+4 / 2+5
Max.output voltage U_o	≤ 9.6 V
Max. output current I_o	≤ 11 mA
Max. output power P_o	≤ 26 mW
Characteristic	linear
Internal inductance/capacitance L_i/C_i	L_i = 65 µH, C_i negligibly small

External inductance/capacitance L_o/C_o

Ex ic	IIC			IIB		
L_o [mH]	1	5	10	1	5	10
C_o [µF]	1.9	1.4	1.2	11	7.5	6.6

Indication

Operational readiness	green
Switching state	yellow
Error indication	red

Environmental Conditions

Ambient temperature	-25…+70 °C
Storage temperature	-40…+80 °C
Relative humidity	≤ 95 %
Test voltage	2.5 kV

Mechanical data

Tightening torque	0.5 Nm
Electrical connection	4 x 3-pin removable terminal blocks, reverse polarity protected, screw connection
Terminal cross-section	1 x 2.5 mm² / 2 x 1.5 mm²
Housing material	Polycarbonate/ABS
Mounting instruction	for DIN rail / panel
Protection class	IP20
Flammability class acc. to UL 94	V-0
Dimensions	18 x 104 x 110 mm

Approval | Certification	ATEX, IECEx, UL, cFM$_{us}$, CSA, TR CU, NEPSI, KOSHA, TIIS, CCOE

Isolating switching amplifier, 2-channel

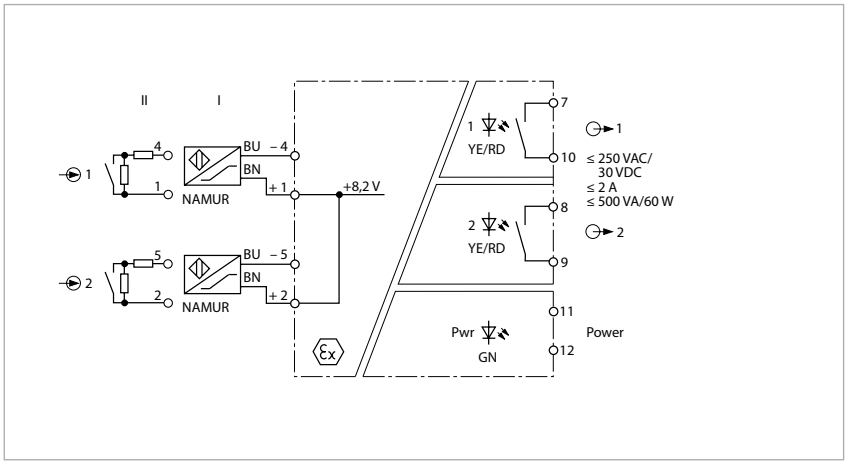

Features

- ATEX, IECEx, UL, $_{C}FM_{US}$, CSA, TR CU, NEPSI, KOSHA, TIIS, CCOE
- Installation in zone 2
- 2 relay outputs (NO)
- Output mode adjustable (NO/NC mode)
- Input circuits monitored for wire-break/short-circuit (ON/OFF switchable)
- Complete galvanic isolation

The 2-channel isolating switching amplifier IM1-22EX-R is equipped with intrinsically safe input circuits.

Sensors according to EN 60947-5-6 (NAMUR) or potential-free contact transmitters can be connected to the device.

The output circuits have 2 relays, each with 1 NO contact.

Six front panel switches are available to set the output mode separately for each channel (NO/NC mode), as well as to enable/disable wire-break (WB) and short-circuit (SC) monitoring separately.

You can also set the output mode separately for each channel.

The Pwr LED lights green to indicate operational readiness. The 2-color LEDs 1 and 2 light yellow to indicate the switching status of the associated output. In the event of an input circuit error, the 2-color LED associated to the affected input turns red, provided the input circuit monitoring function is activated. Thereupon the output relay drops out.

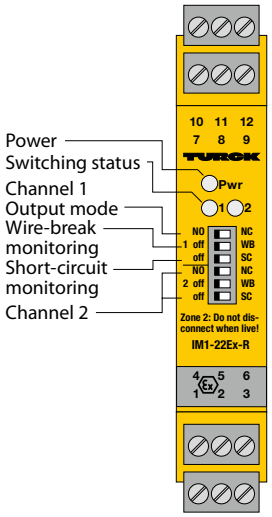

Output relay – Load curve

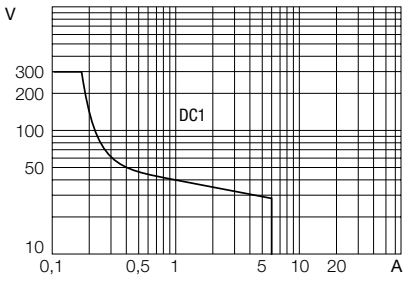

Output relay – Electrical lifetime

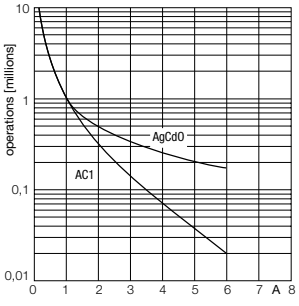

Technical data

Type	IM1-22EX-R
Ident no.	7541231

Power supply

Nominal voltage	Universal voltage supply unit
Operating voltage range	20…125 VDC
Operating voltage range	20…250 VAC
Frequency	40…70 Hz
Power consumption	≤ 3 W

Inputs

No-load voltage	8.2 VDC
Short-circuit current	8.2 mA
Input resistance	1 kΩ
Cable resistance	≤ 50 Ω
Switch-on threshold	1.55 mA
Switch-off threshold	1.75 mA
Short-circuit threshold	≥ 6 mA
Wire breakage threshold	≤ 0.1 mA

Outputs

Output circuits (digital)	2 x relays (NO)
Switching frequency	≤ 10 Hz
Relay switching voltage	≤ 250 VAC/120 VDC
Switching current per output	≤ 2 A
Switching capacity per output	≤ 500 VA/60 W
Contact quality	AgNi, 3µ Au

Approvals and declarations

Ex approval acc. to conformity certificate	TÜV 04 ATEX 2553
Device designation	Ⓔx II (1) G, II (1) D [Ex ia Ga] IIC; [Ex ia Da] IIIC
Max. values:	Terminal connection: 1+4 / 2+5
Max. output voltage U_o	≤ 9.6 V
Max. output current I_o	≤ 11 mA
Max. output power P_o	≤ 26 mW
Rated voltage	250 V
Characteristic	linear
Internal inductance/capacitance L_i/C_i	L_i = 65 µH, C_i negligibly small

External inductance/capacitance L_o/C_o

Ex ia	IIC			IIB		
L_o [mH]	1	5	10	2	10	20
C_o [µF]	1.1	0.83	0.74	5.2	3.8	3.4

Ex approval acc. to conformity certificate	TÜV 06 ATEX 552968 X
Application area	II 3 G
Protection type	Ex nA nC [ic Gc] IIC/IIB T4 Gc
Max. values:	Terminal connection: 1+4 / 2+5
Max.output voltage U_o	≤ 9.6 V
Max. output current I_o	≤ 11 mA
Max. output power P_o	≤ 26 mW
Characteristic	linear
Internal inductance/capacitance L_i/C_i	L_i = 65 µH, C_i negligibly small

External inductance/capacitance L_o/C_o

Ex ic	IIC			IIB		
L_o [mH]	1	5	10	1	5	10
C_o [µF]	1.9	1.4	1.2	11	7.5	6.6

Declaration	SIL 2 acc. to EXIDA FMEDA

Indication

Operational readiness	green
Switching state	yellow
Error indication	red

Environmental Conditions

Ambient temperature	-25…+70 °C
Storage temperature	-40…+80 °C
Relative humidity	≤ 95 %
Test voltage	2.5 kV
MTTF	272 years acc. to SN 29500 (Ed. 99) 40 °C

Mechanical data

Tightening torque	0.5 Nm
Electrical connection	4 x 3-pin removable terminal blocks, reverse polarity protected, screw connection
Terminal cross-section	1 x 2.5 mm² / 2 x 1.5 mm²
Housing material	Polycarbonate/ABS
Mounting instruction	for DIN rail / panel
Protection class	IP20
Flammability class acc. to UL 94	V-0
Dimensions	18 x 104 x 110 mm

Approval | Certification	ATEX, IECEx, UL, cFM$_{us}$, CSA, TR CU, NEPSI, KOSHA, TIIS, CCOE

Isolating switching amplifier, 2-channel

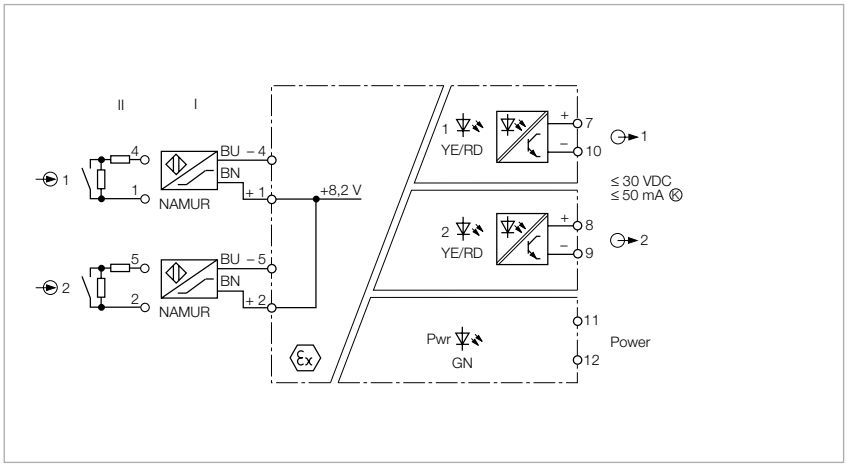

Features

- ATEX, IECEx, UL, $_{C}FM_{US}$, CSA, TR CU, NEPSI, KOSHA, TIIS, CCOE
- Installation in zone 2
- 2 transistor outputs
- Output mode adjustable (NO/NC mode)
- Input circuits monitored for wire-break/short-circuit (ON/OFF switchable)
- Complete galvanic isolation

The 2-channel isolating switching amplifier IM1-22EX-T is equipped with intrinsically safe input circuits.

Sensors according to EN 60947-5-6 (NAMUR) or potential-free contact transmitters can be connected to the device.

The output circuits feature 2 potential-free and short-circuit protected transistors.

Six front panel switches are available to set the output mode separately for each channel (NO/NC mode), as well as to enable/disable wire-break (WB) and short-circuit (SC) monitoring separately.

You can also set the output mode separately for each channel.

The Pwr LED lights green to indicate operational readiness. The 2-color LEDs 1 and 2 light yellow to indicate the switching status of the associated output. In the event of an input circuit error, the 2-color LED associated to the affected input turns red, provided the input circuit monitoring function is activated. Thereupon the associated output transistor is blocked.

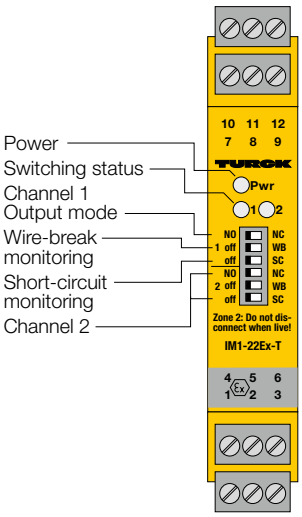

Hans Turck GmbH & Co. KG ▪ Tel. +49 208 49 52-0 ▪ Fax +49 208 49 52-264

Technical data

Type	IM1-22EX-T
Ident no.	7541232

Power supply

Nominal voltage	Universal voltage supply unit
Operating voltage range	20…125 VDC
Operating voltage range	20…250 VAC
Frequency	40…70 Hz
Power consumption	≤ 3 W

Inputs

No-load voltage	8.2 VDC
Short-circuit current	8.2 mA
Input resistance	1 kΩ
Cable resistance	≤ 50 Ω
Switch-on threshold	1.55 mA
Switch-off threshold	1.75 mA
Short-circuit threshold	≥ 6 mA
Wire breakage threshold	≤ 0.1 mA

Outputs

Output circuits (digital)	2 x transistor (potential-free, short-circuit proof)
Switching voltage	≤ 30 VDC
Switching current per output	≤ 50 mA
Switching frequency	≤ 5000 Hz
Voltage drop	≤ 2.5 V

Approvals and declarations

Ex approval acc. to conformity certificate	TÜV 04 ATEX 2553
Device designation	Ⓔx II (1) G, II (1) D [Ex ia Ga] IIC; [Ex ia Da] IIIC
Max. values:	Terminal connection: 1+4 / 2+5
Max. output voltage U_0	≤ 9.6 V
Max. output current I_0	≤ 11 mA
Max. output power P_0	≤ 26 mW
Rated voltage	250 V
Characteristic	linear
Internal inductance/capacitance L_i/C_i	L_i = 65 µH, C_i negligibly small

External inductance/capacitance L_o/C_o

Ex ia	IIC			IIB		
L_0 [mH]	1	5	10	2	10	20
C_0 [µF]	1.1	0.83	0.74	5.2	3.8	3.4

Ex approval acc. to conformity certificate	TÜV 06 ATEX 552968 X
Application area	II 3 G
Protection type	Ex nA [ic Gc] IIC/IIB T4 Gc
Max. values:	Terminal connection: 1+4 / 2+5
Max.output voltage U_0	≤ 9.6 V
Max. output current I_0	≤ 11 mA
Max. output power P_0	≤ 26 mW
Characteristic	linear
Internal inductance/capacitance L_i/C_i	L_i = 65 µH, C_i negligibly small

External inductance/capacitance L_o/C_o

Ex ic	IIC			IIB		
L_0 [mH]	1	5	10	1	5	10
C_0 [µF]	1.9	1.4	1.2	11	7.5	6.6

Declaration	SIL 2 acc. to EXIDA FMEDA

Indication

Operational readiness	green
Switching state	yellow
Error indication	red

Environmental Conditions

Ambient temperature	-25…+70 °C
Storage temperature	-40…+80 °C
Relative humidity	≤ 95 %
Test voltage	2.5 kV
MTTF	314 years acc. to SN 29500 (Ed. 99) 40 °C

Mechanical data

Tightening torque	0.5 Nm
Electrical connection	4 x 3-pin removable terminal blocks, reverse polarity protected, screw connection
Terminal cross-section	1 x 2.5 mm² / 2 x 1.5 mm²
Housing material	Polycarbonate/ABS
Mounting instruction	for DIN rail / panel
Protection class	IP20
Flammability class acc. to UL 94	V-0
Dimensions	18 x 104 x 110 mm

Approval | Certification	ATEX, IECEx, UL, cFM$_{us}$, CSA, TR CU, NEPSI, KOSHA, TIIS, CCOE

Isolating switching amplifier, 2-channel

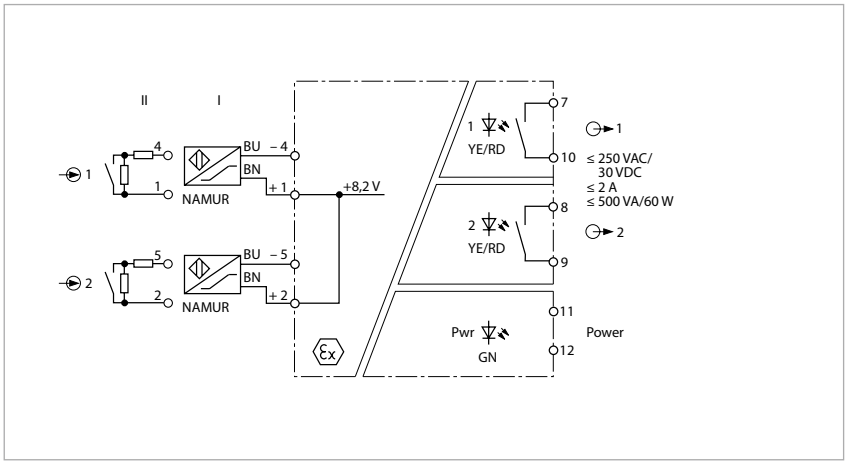

Features

- ATEX, IECEx, UL, $_{C}FM_{US}$, CSA, TR CU, KOSHA, CCOE
- Installation in zone 2
- 2 relay outputs (NO)
- Output mode adjustable (NO/NC mode)
- Input circuits monitored for wire-break/short-circuit (ON/OFF switchable)
- Test voltage 4.0 kV
- Complete galvanic isolation

The 2-channel isolating switching amplifier IM1-22EX-R/K51 is equipped with intrinsically safe input circuits.

Sensors according to EN 60947-5-6 (NAMUR) or potential-free contact transmitters can be connected to the device.

The output circuits have 2 relays, each with 1 NO contact.

You can set each channel separately to work/closed current, i.e. NO/NC mode and duplicate signals via 3 switches on the front. The switching state of channel 1 is thereby transmitted to the outputs 1 and 2. You can also set the output mode separately for each channel.

The Pwr LED lights green to indicate operational readiness. The 2-color LEDs 1 and 2 light yellow to indicate the switching status of the associated output. In the event of an input circuit error, the 2-color LED associated to the affected input turns red, provided the input circuit monitoring function is activated. Thereupon the output relay drops out.

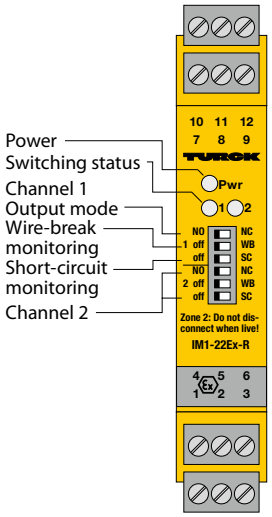

Output relay – Load curve

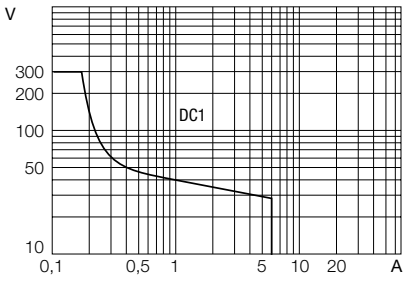

Output relay – Electrical lifetime

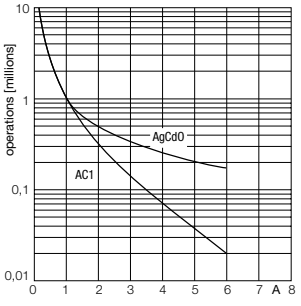

Hans Turck GmbH & Co. KG ▪ Tel. +49 208 49 52-0 ▪ Fax +49 208 49 52-264

Technical data

Type	IM1-22EX-R/K51
Ident no.	7541238

Power supply	
Nominal voltage	Universal voltage supply unit
Operating voltage range	20…125 VDC
Operating voltage range	20…250 VAC
Frequency	40…70 Hz
Power consumption	≤ 3 W

Inputs	
No-load voltage	8.2 VDC
Short-circuit current	8.2 mA
Input resistance	1 kΩ
Cable resistance	≤ 50 Ω
Switch-on threshold	1.55 mA
Switch-off threshold	1.75 mA
Short-circuit threshold	≥ 6 mA
Wire breakage threshold	≤ 0.1 mA

Outputs	
Output circuits (digital)	2 x relays (NO)
Switching frequency	≤ 10 Hz
Relay switching voltage	≤ 250 VAC/120 VDC
Switching current per output	≤ 2 A
Switching capacity per output	≤ 500 VA/60 W
Contact quality	AgNi, 3µ Au

Approvals and declarations	
Ex approval acc. to conformity certificate	TÜV 04 ATEX 2553
Device designation	⟨Ex⟩ II (1) G, II (1) D [Ex ia Ga] IIC; [Ex ia Da] IIIC
Max. values:	Terminal connection: 1+4 / 2+5
Max. output voltage U_o	≤ 9.6 V
Max. output current I_o	≤ 11 mA
Max. output power P_o	≤ 26 mW
Characteristic	linear
Internal inductance/capacitance L_i/C_i	L_i = 65 µH, C_i negligibly small

External inductance/capacitance L_o/C_o

Ex ia	IIC			IIB		
L_o [mH]	1	5	10	2	10	20
C_o [µF]	1.1	0.83	0.74	5.2	3.8	3.4

Ex approval acc. to conformity certificate	TÜV 06 ATEX 552968 X
Application area	II 3 G
Protection type	Ex nA nC [ic Gc] IIC/IIB T4 Gc
Max. values	Terminal connection: 1+4 / 2+5
Max.output voltage U_o	≤ 9.6 V
Max. output current I_o	≤ 11 mA
Max. output power P_o	≤ 26 mW
Characteristic	linear
Internal inductance/capacitance L_i/C_i	L_i = 65 µH, C_i negligibly small

External inductance/capacitance L_o/C_o

Ex ic	IIC			IIB		
L_o [mH]	1	5	10	1	5	10
C_o [µF]	1.9	1.4	1.2	11	7.5	6.6

Indication	
Operational readiness	green
Switching state	yellow
Error indication	red

Environmental Conditions	
Ambient temperature	-25…+70 °C
Storage temperature	-40…+80 °C
Relative humidity	≤ 95 %
Test voltage	4.0 kV

Mechanical data	
Tightening torque	0.5 Nm
Electrical connection	4 x 3-pin removable terminal blocks, reverse polarity protected, screw connection
Terminal cross-section	1 x 2.5 mm² / 2 x 1.5 mm²
Housing material	Polycarbonate/ABS
Mounting instruction	for DIN rail / panel
Protection class	IP20
Flammability class acc. to UL 94	V-0
Dimensions	18 x 104 x 110 mm

Approval | Certification	ATEX, IECEx, UL, $_cFM_{us}$, CSA, TR CU, NEPSI, KOSHA, CCOE

Isolating switching amplifier, 2-channel

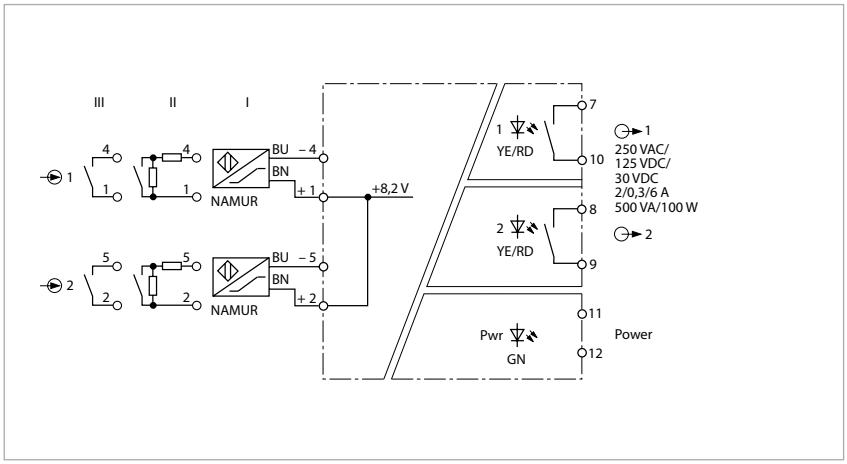

Features

- TR CU
- 2 relay outputs (NO)
- Output mode adjustable (NO/NC mode)
- Input circuits monitored for wire-break/short-circuit (ON/OFF switchable)
- Complete galvanic isolation

The isolating switching amplifier IM1-22-R is a 2-channel device.

Sensors according to EN 60947-5-6 (NAMUR) or potential-free contact transmitters can be connected to the device.

The output circuits have 2 relays, each with 1 NO contact.

Six front panel switches are available to set the output mode separately for each channel (NO/NC mode), as well as to enable/disable wire-break (WB) and short-circuit (SC) monitoring separately.

The Pwr LED lights green to indicate operational readiness. The 2-color LEDs 1 and 2 light yellow to indicate the switching status of the associated output. In the event of an input circuit error, the 2-color LED associated to the affected input turns red, provided the input circuit monitoring function is activated. Thereupon the output relay drops out.

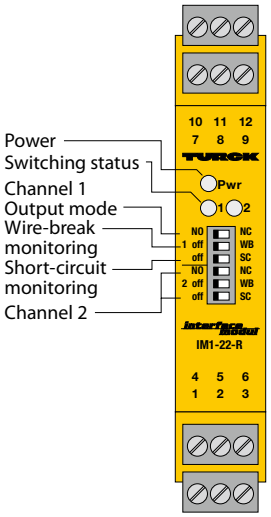

Output relay – Load curve

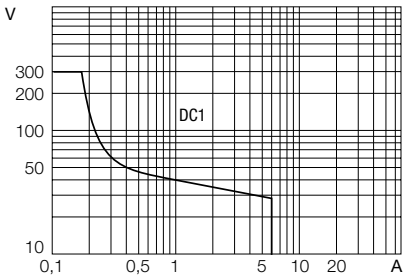

Output relay – Electrical lifetime

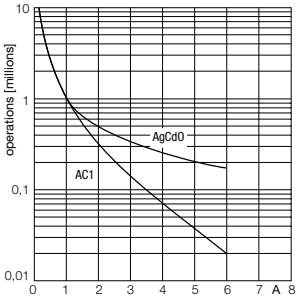

Technical data

Type	IM1-22-R
Ident no.	7541234

Power supply	
Nominal voltage	Universal voltage supply unit
Operating voltage range	20…125 VDC
Operating voltage range	20…250 VAC
Frequency	40…70 Hz
Power consumption	≤ 3 W

Inputs	
No-load voltage	8.2 VDC
Short-circuit current	8.2 mA
Input resistance	1 kΩ
Cable resistance	≤ 50 Ω
Switch-on threshold	1.55 mA
Switch-off threshold	1.75 mA
Short-circuit threshold	≥ 6 mA
Wire breakage threshold	≤ 0.1 mA

Outputs	
Output circuits (digital)	2 x relays (NO)
Switching frequency	≤ 10 Hz
Relay switching voltage	≤ 250 VAC/120 VDC
Switching current per output	≤ 2 A
Switching capacity per output	≤ 500 VA/60 W
Contact quality	AgNi, 3µ Au

Approvals and declarations	
Declaration	SIL 2 acc. to EXIDA FMEDA

Indication	
Operational readiness	green
Switching state	yellow
Error indication	red

Environmental Conditions	
Ambient temperature	-25…+70 °C
Storage temperature	-40…+80 °C
Relative humidity	≤ 95 %
Test voltage	2.5 kV
MTTF	272 years acc. to SN 29500 (Ed. 99) 40 °C

Mechanical data	
Tightening torque	0.5 Nm
Electrical connection	4 x 3-pin removable terminal blocks, reverse polarity protected, screw connection
Terminal cross-section	1 x 2.5 mm² / 2 x 1.5 mm²
Housing material	Polycarbonate/ABS
Mounting instruction	for DIN rail / panel
Protection class	IP20
Flammability class acc. to UL 94	V-0
Dimensions	18 x 104 x 110 mm

Approval | Certification	TR CU

Isolating switching amplifier, 2-channel

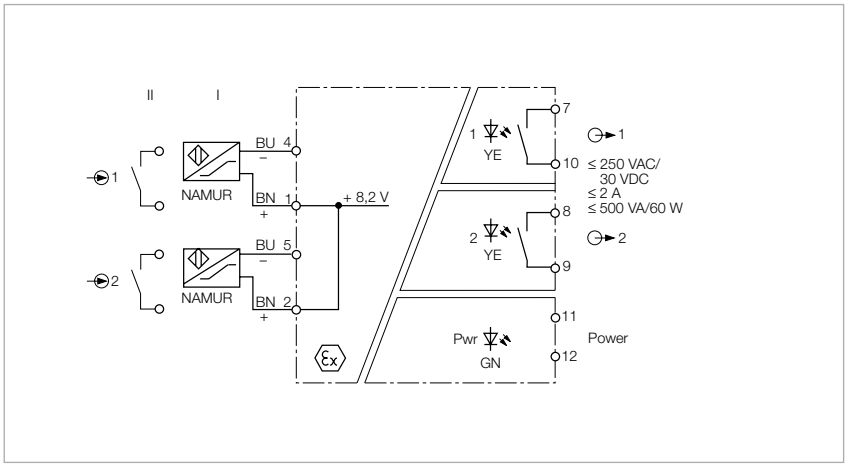

Features

- ATEX, IECEx, UL, $_{C}FM_{US}$, CSA, TR CU, NEPSI, KOSHA, TIIS, CCOE
- Installation in zone 2
- 2 relay outputs (NO)
- Output mode adjustable (NO/NC mode)
- Duplicating of signals possible
- Complete galvanic isolation

The 2-channel isolating switching amplifier IM12-22EX-R is equipped with intrinsically safe input circuits.

Sensors according to EN 60947-5-6 (NAMUR) or potential-free contact transmitters can be connected to the device.

The output circuits have 2 relays, each with 1 NO contact.

You can set each channel separately to work/closed current, i.e. NO/NC mode and duplicate signals via 3 switches on the front. The switching state of channel 1 is thereby transmitted to the outputs 1 and 2. You can also set the output mode separately for each channel.

You can also set the output mode separately for each channel.

The Pwr LED lights green to indicate operational readiness. LED 1 lights yellow to indicate the switching status of the output.

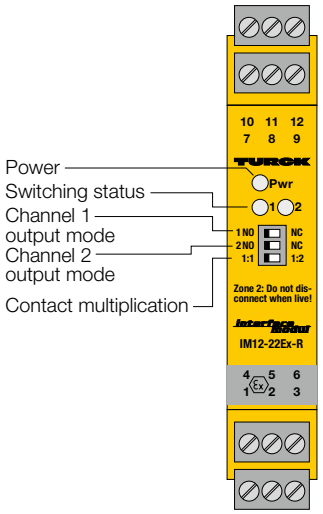

Output relay – Load curve

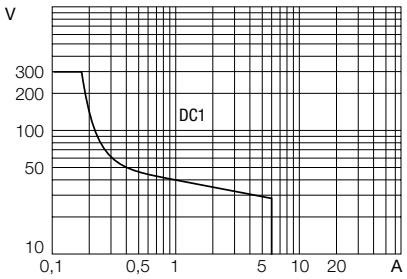

Output relay – Electrical lifetime

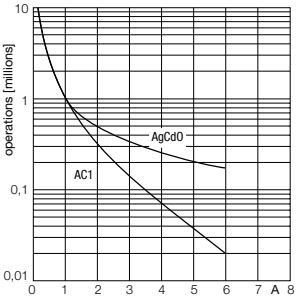

Hans Turck GmbH & Co. KG ▪ Tel. +49 208 49 52-0 ▪ Fax +49 208 49 52-264

Technical data

Type	IM12-22EX-R
Ident no.	7541233

Power supply

Nominal voltage	Universal voltage supply unit
Operating voltage range	20…125 VDC
Operating voltage range	20…250 VAC
Frequency	40…70 Hz
Power consumption	≤ 3 W

Inputs

No-load voltage	8.2 VDC
Short-circuit current	8.2 mA
Input resistance	1 kΩ
Cable resistance	≤ 50 Ω
Switch-on threshold	1.55 mA
Switch-off threshold	1.75 mA

Outputs

Output circuits (digital)	2 x relays (NO)
Switching frequency	≤ 10 Hz
Relay switching voltage	≤ 250 VAC/120 VDC
Switching current per output	≤ 2 A
Switching capacity per output	≤ 500 VA/60 W
Contact quality	AgNi, 3µ Au

Approvals and declarations

Ex approval acc. to conformity certificate	TÜV 04 ATEX 2553
Device designation	Ⓔx II (1) G, II (1) D [Ex ia Ga] IIC; [Ex ia Da] IIIC
Max. values:	Terminal connection: 1+4 / 2+5
Max. output voltage U_o	≤ 9.6 V
Max. output current I_o	≤ 11 mA
Max. output power P_o	≤ 26 mW
Rated voltage	250 V
Characteristic	linear
Internal inductance/capacitance L_i/C_i	L_i = 65 µH, C_i negligibly small

External inductance/capacitance L_o/C_o

Ex ia	IIC			IIB		
L_o [mH]	1	5	10	2	10	20
C_o [µF]	1.1	0.83	0.74	5.2	3.8	3.4

Ex approval acc. to conformity certificate	TÜV 06 ATEX 552968 X
Application area	II 3 G
Protection type	Ex nA nC [ic Gc] IIC/IIB T4 Gc
Max. values:	Terminal connection: 1+4 / 2+5
Max.output voltage U_o	≤ 9.6 V
Max. output current I_o	≤ 11 mA
Max. output power P_o	≤ 26 mW
Characteristic	linear
Internal inductance/capacitance L_i/C_i	L_i = 65 µH, C_i negligibly small

External inductance/capacitance L_o/C_o

Ex ic	IIC			IIB		
L_o [mH]	1	5	10	1	5	10
C_o [µF]	1.9	1.4	1.2	11	7.5	6.6

Indication

Operational readiness	green
Switching state	yellow
Error indication	red

Environmental Conditions

Ambient temperature	-25…+70 °C
Storage temperature	-40…+80 °C
Relative humidity	≤ 95 %
Test voltage	2.5 kV

Mechanical data

Tightening torque	0.5 Nm
Electrical connection	4 x 3-pin removable terminal blocks, reverse polarity protected, screw connection
Terminal cross-section	1 x 2.5 mm² / 2 x 1.5 mm²
Housing material	Polycarbonate/ABS
Mounting instruction	for DIN rail / panel
Protection class	IP20
Flammability class acc. to UL 94	V-0
Dimensions	18 x 104 x 110 mm

Approval | Certification	ATEX, IECEx, UL, $_cFM_{us}$, CSA, TR CU, NEPSI, KOSHA, TIIS, CCOE

Isolating switching amplifier, 2-channel

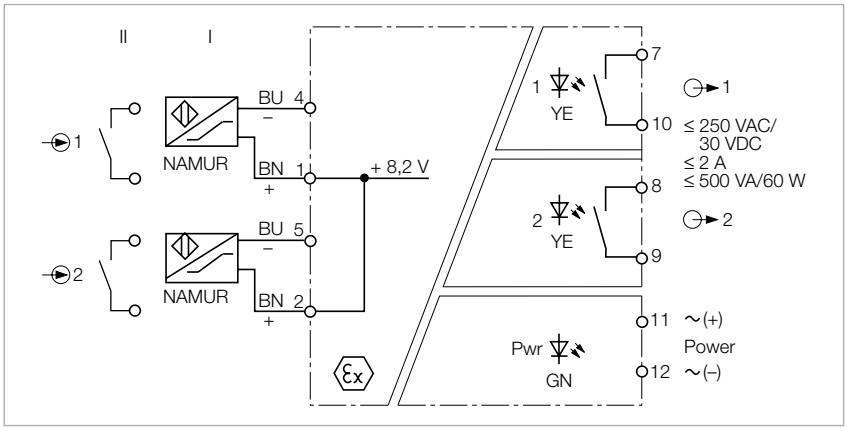

Features

- ATEX, TR CU
- Output mode adjustable (NO/NC mode)
- Duplicating of signals possible
- Complete galvanic isolation

The 2-channel isolating switching amplifier IM12-22EX-R/230VAC is equipped with intrinsically safe input circuits.

Sensors according to EN 60947-5-6 (NAMUR) or potential-free contact transmitters can be connected to the device.

The output circuits have 2 relays, each with 1 NO contact.

You can set each channel separately to work/closed current, i.e. NO/NC mode and duplicate signals via 3 switches on the front. The switching state of channel 1 is thereby transmitted to the outputs 1 and 2. You can also set the output mode separately for each channel.

You can also set the output mode separately for each channel.

The Pwr LED lights green to indicate operational readiness. LED 1 lights yellow to indicate the switching status of the output.

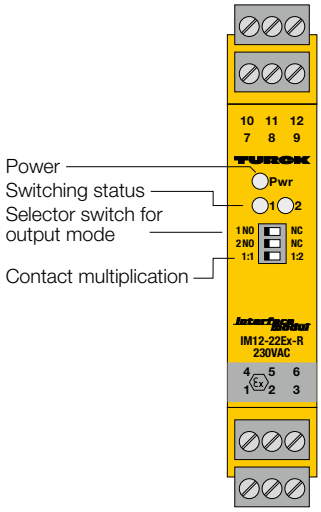

Output relay – Load curve

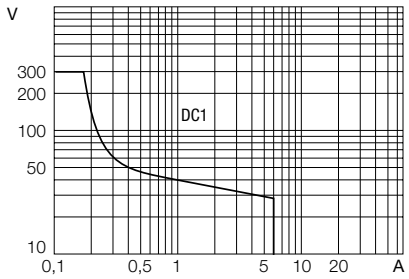

Output relay – Electrical lifetime

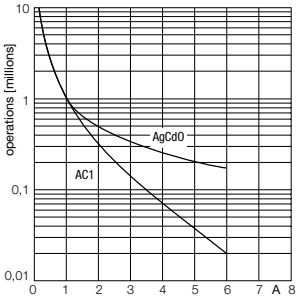

Hans Turck GmbH & Co. KG ▪ Tel. +49 208 49 52-0 ▪ Fax +49 208 49 52-264

Technical data

Type	IM12-22EX-R/230VAC
Ident no.	7505641

Power supply

Nominal voltage	230 VAC
Operating voltage range	196…253 VAC
Frequency	48…62 Hz
Power consumption	≤ 7 VA

Inputs

No-load voltage	8.2 VDC
Short-circuit current	8.2 mA
Input resistance	1 kΩ
Cable resistance	≤ 50 Ω
Switch-on threshold	1.55 mA
Switch-off threshold	1.75 mA

Outputs

Output circuits (digital)	2 x relays (NO)
Switching frequency	≤ 10 Hz
Relay switching voltage	≤ 250 VAC/120 VDC
Switching current per output	≤ 2 A
Switching capacity per output	≤ 500 VA/60 W
Contact quality	AgNi, 3µ Au

Approvals and declarations

Ex approval acc. to conformity certificate	PTB 00 ATEX 2033
Device designation	⟨Ex⟩ II (1) G, II (1) D [Ex ia Ga] IIC; [Ex ia Da] IIIC
Max. values:	Terminal connection: 1…6
Max. output voltage U_o	≤ 9.6 V
Max. output current I_o	≤ 21.4 mA
Max. output power P_o	≤ 26 mW
Rated voltage	250 V
Characteristic	linear
Internal inductance/capacitance L_i/C_i	C_i negligibly small, L_i negligibly small

External inductance/capacitance L_o/C_o

Ex ia	IIC		IIIC	
L_o [mH]	1	5	1	5
C_o [µF] (2 terminals)	1.1	0.84	6.2	4.4
C_o [µF] (3 terminals or more)	1.1	0.8	6.2	4.3

Indication

Operational readiness	green
Switching state	yellow
Error indication	red

Environmental Conditions

Ambient temperature	-25…+60 °C
Storage temperature	-40…+80 °C
Relative humidity	≤ 95 %
Test voltage	2.5 kV

Mechanical data

Tightening torque	0.5 Nm
Electrical connection	4 x 3-pin removable terminal blocks, reverse polarity protected, screw connection
Terminal cross-section	1 x 2.5 mm² / 2 x 1.5 mm²
Housing material	Polycarbonate/ABS
Mounting instruction	for DIN rail / panel
Protection class	IP20
Flammability class acc. to UL 94	V-0
Dimensions	18 x 104 x 110 mm

Approval | Certification	ATEX, TR CU

Isolating switching amplifier, 2-channel

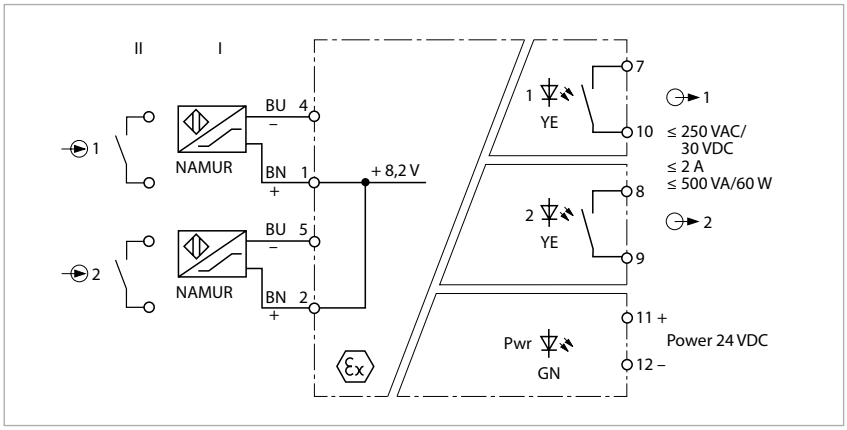

Features

- ATEX, $_{C}FM_{US}$, TR CU
- Output mode adjustable (NO/NC mode)
- Duplicating of signals possible
- Complete galvanic isolation

The 2-channel isolating switching amplifier IM12-22EX-R/24VDC is equipped with intrinsically safe input circuits.

Sensors according to EN 60947-5-6 (NAMUR) or potential-free contact transmitters can be connected to the device.

The output circuits have 2 relays, each with 1 NO contact.

You can set each channel separately to work/closed current, i.e. NO/NC mode and duplicate signals via 3 switches on the front. The switching state of channel 1 is thereby transmitted to the outputs 1 and 2. You can also set the output mode separately for each channel.

You can also set the output mode separately for each channel.

The Pwr LED lights green to indicate operational readiness. LED 1 lights yellow to indicate the switching status of the output.

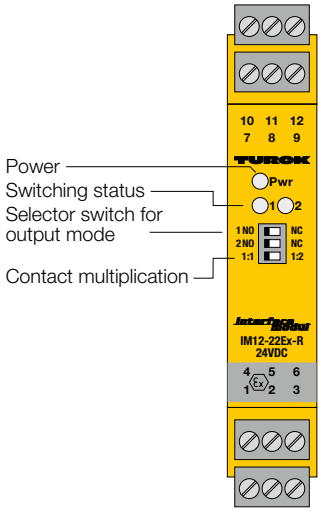

Output relay – Load curve

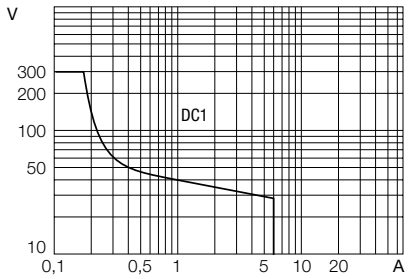

Output relay – Electrical lifetime

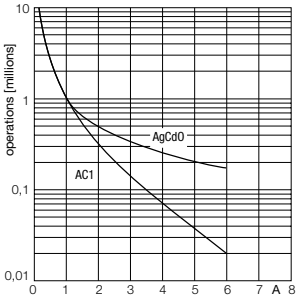

Hans Turck GmbH & Co. KG ▪ Tel. +49 208 49 52-0 ▪ Fax +49 208 49 52-264

Technical data

Type	IM12-22EX-R/24VDC
Ident no.	7505640

Power supply	
Nominal voltage	24 VDC
Operating voltage range	10…30 VDC
Power consumption	≤ 1.5 W

Inputs	
No-load voltage	8.2 VDC
Short-circuit current	8.2 mA
Input resistance	1 kΩ
Cable resistance	≤ 50 Ω
Switch-on threshold:	1.55 mA
Switch-off threshold:	1.75 mA

Outputs	
Output circuits (digital)	2 x relays (NO)
Switching frequency	≤ 10 Hz
Relay switching voltage	≤ 250 VAC/120 VDC
Switching current per output	≤ 2 A
Switching capacity per output	≤ 500 VA/60 W
Contact quality	AgNi, 3µ Au

Approvals and declarations	
Ex approval acc. to conformity certificate	PTB 00 ATEX 2033
Device designation	Ⓔx II (1) G, II (1) D [Ex ia Ga] IIC; [Ex ia Da] IIIC
Max. values:	Terminal connection: 1…6
Max. output voltage U_o	≤ 9.6 V
Max. output current I_o	≤ 21.4 mA
Max. output power P_o	≤ 26 mW
Rated voltage	250 V
Characteristic	linear
Internal inductance/capacitance L_i/C_i	C_i negligibly small, L_i negligibly small

External inductance/capacitance L_o/C_o

Ex ia	IIC		IIIC	
L_o [mH]	1	5	1	5
C_o [µF] (2 terminals)	1.1	0.84	6.2	4.4
C_o [µF] (3 terminals or more)	1.1	0.8	6.2	4.3

Indication	
Operational readiness	green
Switching state	yellow
Error indication	red

Environmental Conditions	
Ambient temperature	-25…+60 °C
Storage temperature	-40…+80 °C
Relative humidity	≤ 95 %
Test voltage	2.5 kV

Mechanical data	
Tightening torque	0.5 Nm
Electrical connection	4 x 3-pin removable terminal blocks, reverse polarity protected, screw connection
Terminal cross-section	1 x 2.5 mm² / 2 x 1.5 mm²
Housing material	Polycarbonate/ABS
Mounting instruction	for DIN rail / panel
Protection class	IP20
Flammability class acc. to UL 94	V-0
Dimensions	18 x 104 x 110 mm

Approval | Certification	ATEX, $_cFM_{us}$, TR CU

Isolating switching amplifier, 2-channel

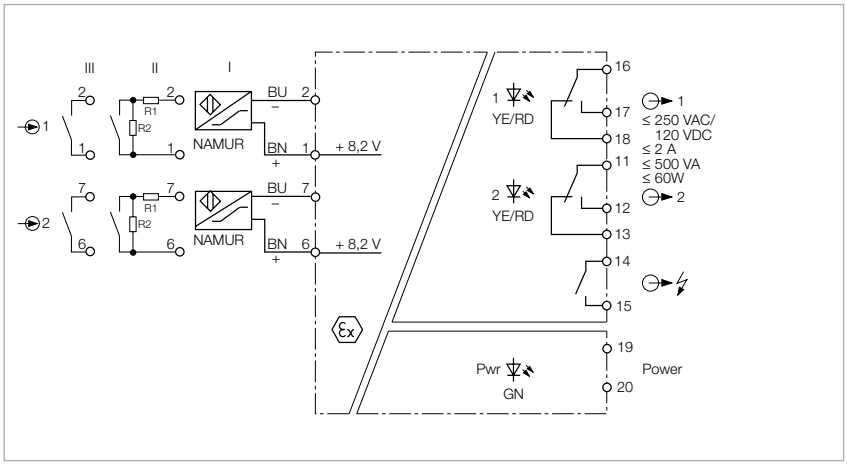

Features

- ATEX, IECEx, TR CU, INMETRO
- Installation in zone 2
- 2 relay outputs (changeover)
- Output mode adjustable (NO/NC mode)
- Input circuits monitored for wire-break/short-circuit (ON/OFF switchable)
- Common alarm output
- Complete galvanic isolation

The 2-channel isolating switching amplifier IM1-231EX-R is equipped with intrinsically safe input circuits.

Sensors according to EN 60947-5-6 (NAMUR) or potential-free contact transmitters can be connected to the device.

The output circuits each have a relay with a changeover contact. In addition, the device features a common alarm output.

Four front panel switches are available to set the output mode separately for each channel (NO or NC mode), as well as to enable/disable line monitoring (LM).

You can also set the output mode separately for each channel.

The Pwr LED lights green to indicate operational readiness. The 2-color LED lights yellow to indicate the switching status of the associated output. In the event of an input circuit error, the 2-color LED turns red, provided the input circuit monitoring function is activated. Thereupon the output and the alarm relay drop out.

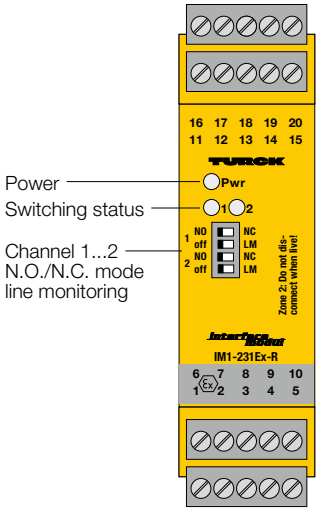

Output relay – Load curve

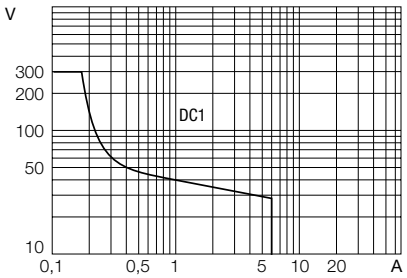

Output relay – Electrical lifetime

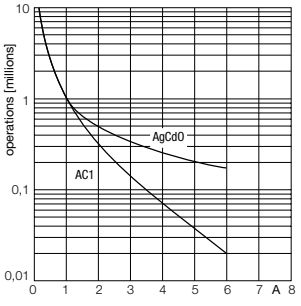

Technical data

Type	IM1-231EX-R
Ident no.	7541239

Power supply

Nominal voltage	Universal voltage supply unit
Operating voltage range	20…125 VDC
Operating voltage range	20…250 VAC
Frequency	40…70 Hz
Power consumption	≤ 3 W

Inputs

No-load voltage	8.2 VDC
Short-circuit current	8.2 mA
Input resistance	1 kΩ
Cable resistance	≤ 50 Ω
Switch-on threshold:	1.55 mA
Switch-off threshold:	1.75 mA
Short-circuit threshold	≥ 6 mA
Wire breakage threshold	≤ 0.1 mA

Outputs

Output circuits (digital)	2 x relay (change-over)
Switching frequency	≤ 10 Hz
Relay switching voltage	≤ 250 VAC/120 VDC
Switching current per output	≤ 2 A
Switching capacity per output	≤ 500 VA/60 W
Contact quality	AgNi, 3µ Au

Approvals and declarations

Ex approval acc. to conformity certificate	TÜV 04 ATEX 2604
Device designation	⟨Ex⟩ II (1) G, II (1) D [Ex ia Ga] IIC ; [Ex ia Da] IIIC
Max. output voltage U_o	≤ 11.3 V
Max. output current I_o	≤ 13 mA
Max. output power P_o	≤ 36 mW
Rated voltage	250 V
Characteristic	linear
Internal inductance/capacitance L_i/C_i	L_i = 100 µH, C_i = 1.1 nF

External inductance/capacitance Lo/Co

Ex ia	IIC			IIB		
L_o[mH]	1.0	5.0	10	2.0	10.0	20.0
C_o[µF]	0.84	0.62	0.55	4.0	2.8	2.5

Ex approval acc. to conformity certificate	TÜV 06 ATEX 552967 X
Application area	II 3 G
Protection type	Ex nA nC [ic Gc] IIC T4
Max. values:	Terminal connection: 1+2 / 4…7 / 9+10
Max.output voltage U_o	≤ 11.3 V
Max. output current I_o	≤ 13 mA
Max. output power P_o	≤ 36 mW
Characteristic	linear
Internal inductance/capacitance L_i/C_i	L_i = 100 µH; C_i = 1.1 nF

External inductance/capacitance L_o/C_o

Ex ic	IIC			IIC		
L_o [mH]	10	5.0	1	20	10.0	2
C_o [µF]	0.91	1.0	1.5	4.3	4.9	6.8

Indication

Operational readiness	green
Switching state	yellow
Error indication	red

Environmental Conditions

Ambient temperature	-25…+70 °C
Storage temperature	-40…+80 °C
Relative humidity	≤ 95 %
Test voltage	2.5 kV

Mechanical data

Tightening torque	0.5 Nm
Electrical connection	4 x 5-pin removable terminal blocks, reverse polarity protected, screw connection
Terminal cross-section	1 x 2.5 mm² / 2 x 1.5 mm²
Housing material	Polycarbonate/ABS
Mounting instruction	for DIN rail / panel
Protection class	IP20
Flammability class acc. to UL 94	V-0
Dimensions	27 x 104 x 110 mm

Approval | Certification	ATEX, IECEx, TR CU, INMETRO

Isolating switching amplifier, 4-channel

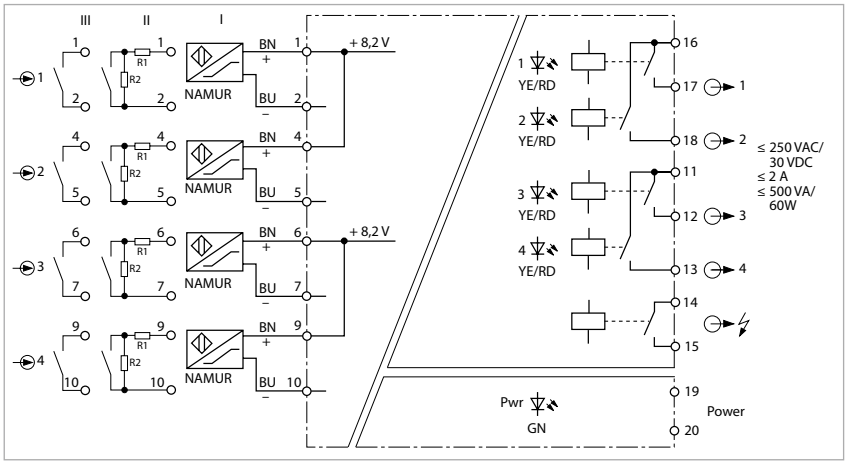

Features

- TR CU
- 5 relay outputs (NO)
- Output mode adjustable (NO/NC mode)
- Input circuits monitored for wire-break/short-circuit (ON/OFF switchable)
- Common alarm output
- Complete galvanic isolation

Sensors according to EN 60947-5-6 (NAMUR) or potential-free contact makers can be connected to the 4-channel isolating transducer IM1-451-R.

The output circuits each feature a relay with NO contact. In addition, the device features a common alarm output.

The output mode (NO/NC) can be set separately for each channel and wire-break (WB) and short-circuit (SC) can be switched on/off via the eight switches on the front.

When using mechanical contacts, wire-break and short-circuit monitoring must be switched off or the contacts must be wired with resistors (II) (see circuit diagram).

The Pwr LED lights green to indicate operational readiness. The 2-color LED 1 lights yellow to indicate the switching status of the associated output. In the event of an input circuit error, the associated 2-color LED turns red, provided the input circuit monitoring function is activated. Thereupon the output and the alarm relay drop out.

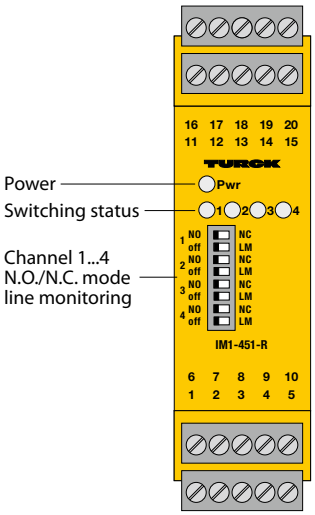

Output relay – Load curve

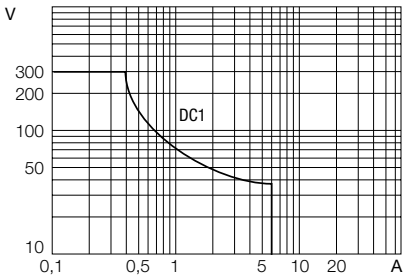

Output relay – Electrical lifetime

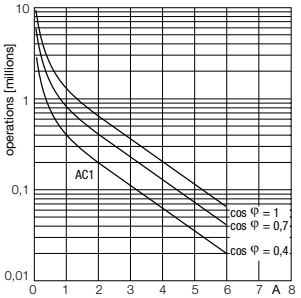

Technical data

Type	IM1-451-R
Ident no.	7541190
Power supply	
Nominal voltage	Universal voltage supply unit
Operating voltage range	20…250 VDC
Operating voltage range	20…250 VAC
Frequency	40…70 Hz
Power consumption	≤ 3 W
Inputs	
No-load voltage	8.2 VDC
Short-circuit current	8.2 mA
Input resistance	1 kΩ
Cable resistance	≤ 50 Ω
Switch-on threshold:	1.55 mA
Switch-off threshold:	1.75 mA
Short-circuit threshold	≥ 6 mA
Wire breakage threshold	≤ 0.1 mA
Outputs	
Output circuits (digital)	5 x relays (NO)
Switching frequency	≤ 10 Hz
Relay switching voltage	≤ 250 VAC/120 VDC
Switching current per output	≤ 2 A
Switching capacity per output	≤ 750 VA/60 W
Contact quality	AgNi, 3µ Au
Indication	
Operational readiness	green
Switching state	yellow
Error indication	red
Environmental Conditions	
Ambient temperature	-25…+70 °C
Storage temperature	-40…+80 °C
Relative humidity	≤ 95 %
Test voltage	2.5 kV
Mechanical data	
Tightening torque	0.5 Nm
Electrical connection	4 x 5-pin removable terminal blocks, reverse polarity protected, screw connection
Terminal cross-section	1 x 2.5 mm² / 2 x 1.5 mm²
Housing material	Polycarbonate/ABS
Mounting instruction	for DIN rail / panel
Protection class	IP20
Flammability class acc. to UL 94	V-0
Dimensions	27 x 104 x 110 mm
Approval | Certification	TR CU

Isolating switching amplifier, 4-channel

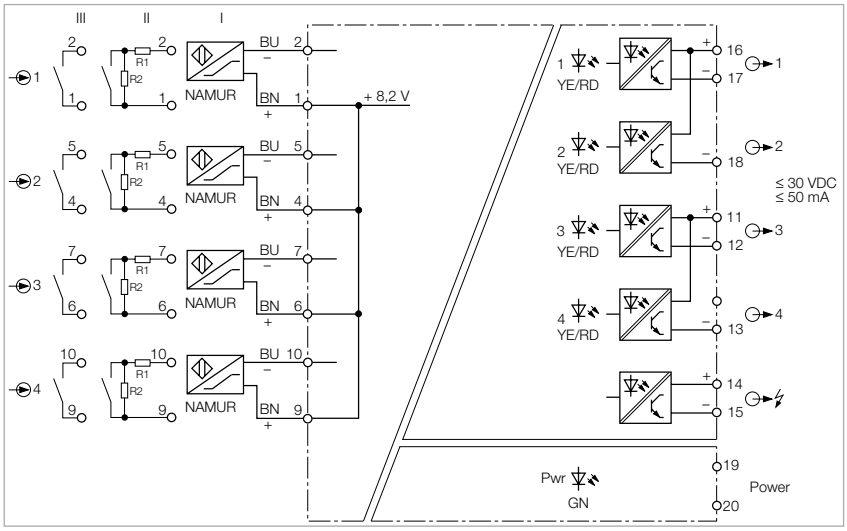

Features

- TR CU
- 5 transistor outputs, short-circuit proof, potential-free and reverse-polarity protected
- Output mode adjustable (NO/NC mode)
- Input circuits monitored for wire-break/short-circuit (ON/OFF switchable)
- Common alarm output
- Complete galvanic isolation

Sensors according to EN 60947-5-6 (NAMUR) or potential-free contact makers can be connected to the 4-channel isolating transducer IM1-451-T.

The output circuits each feature a potential-free and short-circuit proof transistor and the device also has a common alarm output.

The output mode (NO/NC) can be set separately for each channel and wire-break (WB) and short-circuit (SC) can be switched on/off via the eight switches on the front.

When using mechanical contacts, wire-break and short-circuit monitoring must be switched off or the contacts must be wired with resistors (II) (see circuit diagram).

The Pwr LED lights green to indicate operational readiness. The 2-color LED 1 lights yellow to indicate the switching status of the associated output. In the event of an input circuit error, the associated 2-color LED turns red, provided the input circuit monitoring function is activated. Thereupon the output and the alarm transistor are blocked.

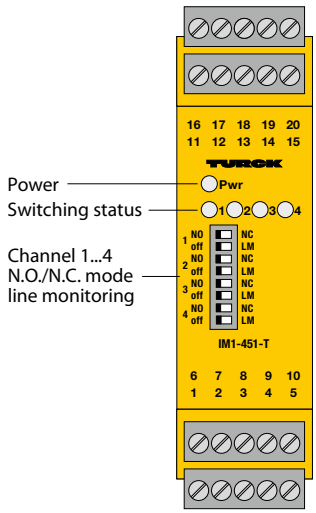

Technical data

Type	IM1-451-T
Ident no.	7520721
Power supply	
Nominal voltage	Universal voltage supply unit
Operating voltage range	20…250 VDC
Operating voltage range	20…250 VAC
Frequency	40…70 Hz
Power consumption	≤ 3 W
Inputs	
No-load voltage	8.2 VDC
Short-circuit current	8.2 mA
Input resistance	1 kΩ
Cable resistance	≤ 50 Ω
Switch-on threshold:	1.55 mA
Switch-off threshold:	1.75 mA
Short-circuit threshold	≥ 6 mA
Wire breakage threshold	≤ 0.1 mA
Outputs	
Output circuits (digital)	5 x transistor (potential-free, short-circuit proof)
Switching voltage	≤ 30 VDC
Switching current per output	≤ 50 mA
Switching frequency	≤ 5000 Hz
Voltage drop	≤ 2.5 V
Indication	
Operational readiness	green
Switching state	yellow
Error indication	red
Environmental Conditions	
Ambient temperature	-25…+70 °C
Storage temperature	-40…+80 °C
Relative humidity	≤ 95 %
Test voltage	2.5 kV
Mechanical data	
Tightening torque	0.5 Nm
Electrical connection	4 x 5-pin removable terminal blocks, reverse polarity protected, screw connection
Terminal cross-section	1 x 2.5 mm² / 2 x 1.5 mm²
Housing material	Polycarbonate/ABS
Mounting instruction	for DIN rail / panel
Protection class	IP20
Flammability class acc. to UL 94	V-0
Dimensions	27 x 104 x 110 mm
Approval | Certification	TR CU

Isolating switching amplifier, 4-channel

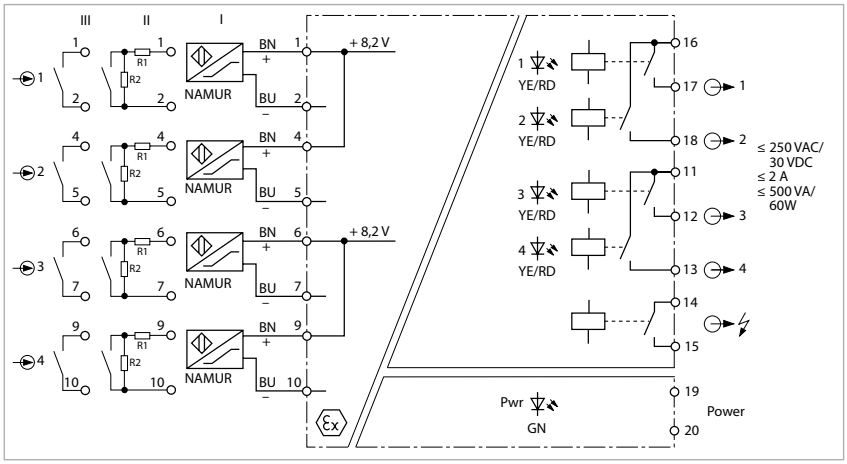

Features

- ATEX, IECEx, UL, $_{C}FM_{US}$, CSA, TR CU, INMETRO, TIIS
- Installation in zone 2
- 5 relay outputs (NO)
- Output mode adjustable (NO/NC mode)
- Input circuits monitored for wire-break/short-circuit (ON/OFF switchable)
- Common alarm output
- Complete galvanic isolation

The 4-channel isolating switching amplifier IM1-451EX-R is equipped with intrinsically safe input circuits.

Sensors according to EN 60947-5-6 (NAMUR) or potential-free contact transmitters can be connected to the device.

The output circuits each feature a relay with NO contact. In addition, the device features a common alarm output.

Six front panel switches are available to set the output mode separately for each channel (NO/NC mode), as well as to enable/disable wire-break (WB) and short-circuit (SC) monitoring separately.

You can also set the output mode separately for each channel.

The Pwr LED lights green to indicate operational readiness. The 2-color LED 1 lights yellow to indicate the switching status of the associated output. In the event of an input circuit error, the associated 2-color LED turns red, provided the input circuit monitoring function is activated. Thereupon the output and the alarm relay drop out.

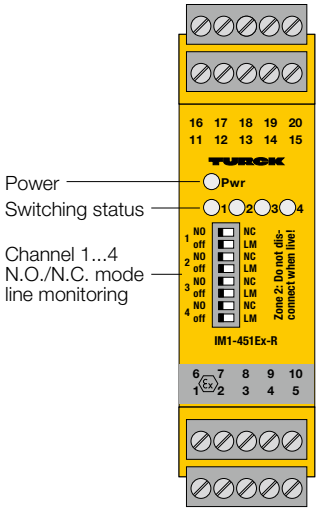

Output relay – Load curve

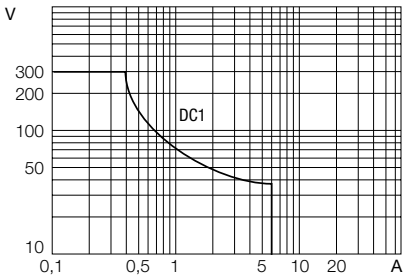

Output relay – Electrical lifetime

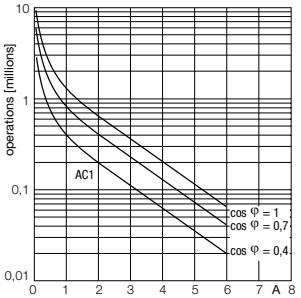

Technical data

Type	IM1-451EX-R
Ident no.	7541188

Power supply

Nominal voltage	Universal voltage supply unit
Operating voltage range	20…125 VDC
Operating voltage range	20…250 VAC
Frequency	40…70 Hz
Power consumption	≤ 3 W

Inputs

No-load voltage	8.2 VDC
Short-circuit current	8.2 mA
Input resistance	1 kΩ
Cable resistance	≤ 50 Ω
Switch-on threshold:	1.55 mA
Switch-off threshold:	1.75 mA
Short-circuit threshold	≥ 6 mA
Wire breakage threshold	≤ 0.1 mA

Outputs

Output circuits (digital)	5 x relays (NO)
Switching frequency	≤ 10 Hz
Relay switching voltage	≤ 250 VAC/120 VDC
Switching current per output	≤ 2 A
Switching capacity per output	≤ 750 VA/60 W
Contact quality	AgNi, 3µ Au

Approvals and declarations

Ex approval acc. to conformity certificate	TÜV 04 ATEX 2604
Device designation	Ⓔx II (1) G, II (1) D [Ex ia Ga] IIC ; [Ex ia Da] IIIC
Max. values:	Terminal connection: 1+2 / 4…7 / 9+10
Max. output voltage U_o	≤ 11.3 V
Max. output current I_o	≤ 13 mA
Max. output power P_o	≤ 36 mW
Rated voltage	250 V
Characteristic	linear
Internal inductance/capacitance L_i/C_i	L_i = 100 µH, C_i = 1.1 nF

External inductance/capacitance Lo/Co

Ex ia	IIC			IIB		
L_o[mH]	1.0	5.0	10	2.0	10.0	20.0
C_o[µF]	0.84	0.62	0.55	4.0	2.8	2.5

Application area	II 3 G
Protection type	Ex nA nC [ic Gc] IIC T4
Max. values:	Terminal connection: 1+2 / 4…7 / 9+10
Max.output voltage U_o	≤ 11.3 V
Max. output current I_o	≤ 13 mA
Max. output power P_o	≤ 36 mW
Characteristic	linear
Internal inductance/capacitance L_i/C_i	L_i = 100 µH; C_i = 1.1 nF

External inductance/capacitance L_o/C_o

Ex ic	IIC			IIC		
L_o [mH]	10	5.0	1	20	10.0	2
C_o [µF]	0.91	1.0	1.5	4.3	4.9	6.8

Indication

Operational readiness	green
Switching state	yellow
Error indication	red

Environmental Conditions

Ambient temperature	-25…+70 °C
Storage temperature	-40…+80 °C
Relative humidity	≤ 95 %
Test voltage	2.5 kV

Mechanical data

Tightening torque	0.5 Nm
Electrical connection	4 x 5-pin removable terminal blocks, reverse polarity protected, screw connection
Terminal cross-section	1 x 2.5 mm² / 2 x 1.5 mm²
Housing material	Polycarbonate/ABS
Mounting instruction	for DIN rail / panel
Protection class	IP20
Flammability class acc. to UL 94	V-0
Dimensions	27 x 104 x 110 mm

Approval | Certification	ATEX, IECEx, UL, $_cFM_{us}$, CSA, TR CU, INMETRO, TIIS

Isolating switching amplifier, 4-channel

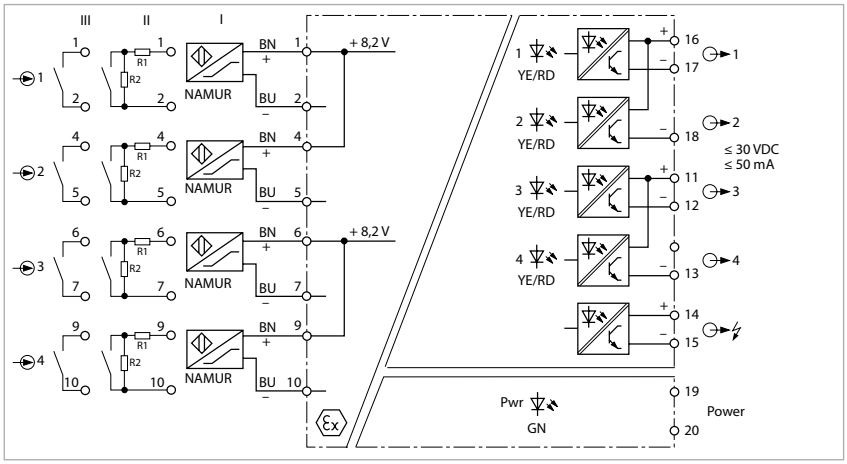

Features

- ATEX, IECEx, UL, $_{C}FM_{US}$, CSA, TR CU, INMETRO, TIIS
- Installation in zone 2
- 5 transistor outputs, short-circuit proof, potential-free and reverse-polarity protected
- Output mode adjustable (NO/NC mode)
- Input circuits monitored for wire-break/short-circuit (ON/OFF switchable)
- Common alarm output
- Complete galvanic isolation

The 4-channel isolating switching amplifier IM1-451EX-T is equipped with intrinsically safe input circuits.

Sensors according to EN 60947-5-6 (NAMUR) or potential-free contact transmitters can be connected to the device.

The output circuits each feature a potential-free and short-circuit proof transistor and the device also has a common alarm output.

Six front panel switches are available to set the output mode separately for each channel (NO/NC mode), as well as to enable/disable wire-break (WB) and short-circuit (SC) monitoring separately.

You can also set the output mode separately for each channel.

The Pwr LED lights green to indicate operational readiness. The 2-color LED 1 lights yellow to indicate the switching status of the associated output. In the event of an input circuit error, the associated 2-color LED turns red, provided the input circuit monitoring function is activated. Thereupon the output and the alarm transistor are blocked.

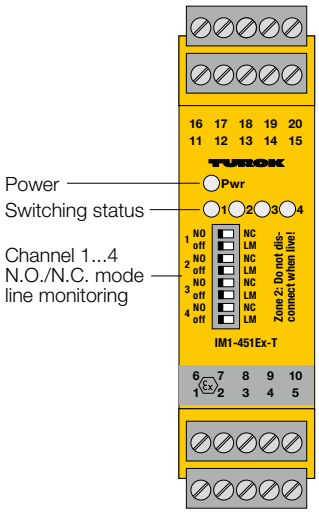

Technical data

Type	IM1-451EX-T
Ident no.	7541189

Power supply

Nominal voltage	Universal voltage supply unit
Operating voltage range	20…125 VDC
Operating voltage range	20…250 VAC
Frequency	40…70 Hz
Power consumption	≤ 3 W

Inputs

No-load voltage	8.2 VDC
Short-circuit current	8.2 mA
Input resistance	1 kΩ
Cable resistance	≤ 50 Ω
Switch-on threshold:	1.55 mA
Switch-off threshold:	1.75 mA
Short-circuit threshold	≥ 6 mA
Wire breakage threshold	≤ 0.1 mA

Outputs

Output circuits (digital)	5 x transistor (potential-free, short-circuit proof)
Switching voltage	≤ 30 VDC
Switching current per output	≤ 50 mA
Switching frequency	≤ 5000 Hz
Voltage drop	≤ 2.5 V

Approvals and declarations

Ex approval acc. to conformity certificate	TÜV 04 ATEX 2604
Device designation	⟨Ex⟩ II (1) G, II (1) D [Ex ia Ga] IIC ; [Ex ia Da] IIIC
Max. values:	Terminal connection: 1+2 / 4…7 / 9+10
Max. output voltage U_o	≤ 11.3 V
Max. output current I_o	≤ 13 mA
Max. output power P_o	≤ 36 mW
Rated voltage	250 V
Characteristic	linear
Internal inductance/capacitance L_i/C_i	L_i = 100 µH, C_i = 1.1 nF

External inductance/capacitance Lo/Co

Ex ia	IIC			IIB		
L_o [mH]	1.0	5.0	10	2.0	10.0	20.0
C_o [µF]	0.84	0.62	0.55	4.0	2.8	2.5

Ex approval acc. to conformity certificate	TÜV 06 ATEX 552967 X
Application area	II 3 G
Protection type	Ex nA [ic Gc] IIC T4
Max. values:	Terminal connection: 1+2 / 4…7 / 9+10
Max.output voltage U_o	≤ 11.3 V
Max. output current I_o	≤ 13 mA
Max. output power P_o	≤ 36 mW
Characteristic	linear

External inductance/capacitance L_o/C_o

Ex ic	IIC			IIB		
L_o [mH]	10	5.0	1	20	10.0	2
C_o [µF]	0.91	1.0	1.5	4.3	4.9	6.8

Indication

Operational readiness	green
Switching state	yellow
Error indication	red

Environmental Conditions

Ambient temperature	-25…+70 °C
Storage temperature	-40…+80 °C
Relative humidity	≤ 95 %
Test voltage	2.5 kV

Mechanical data

Tightening torque	0.5 Nm
Electrical connection	4 x 5-pin removable terminal blocks, reverse polarity protected, screw connection
Terminal cross-section	1 x 2.5 mm² / 2 x 1.5 mm²
Housing material	Polycarbonate/ABS
Mounting instruction	for DIN rail / panel
Protection class	IP20
Flammability class acc. to UL 94	V-0
Dimensions	27 x 104 x 110 mm

Approval | Certification	ATEX, IECEx, UL, cFMus, CSA, TR CU, INMETRO, TIIS

Rotation speed monitor, 1-channel

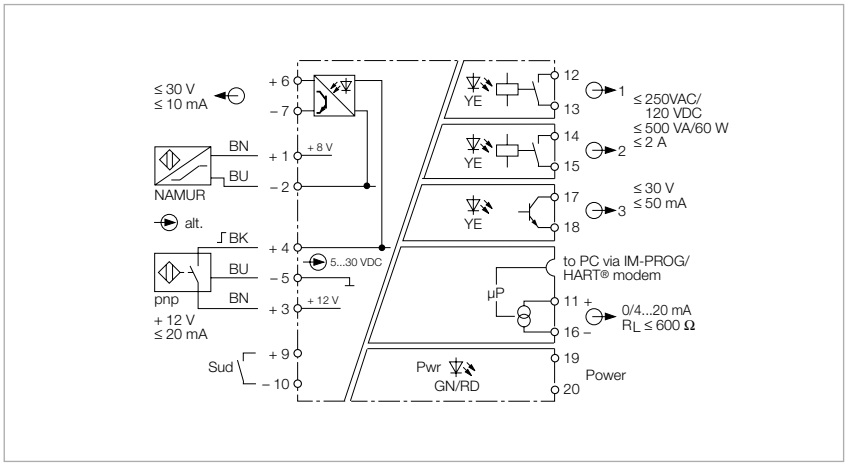

Features

- TR CU
- Monitors over and underrange of limit values and window limits
- Line monitoring
- Operating range 0.06 … 600000 min^{-1}
- Connection of sensors acc. to EN 60947-5-6 (NAMUR), 3-wire sensors and external power supplies
- 2 relay outputs and one transistor output
- Current output 0/4…20 mA, reversible
- Pulse output
- Parametrized via PC (FDT / DTM), front-panel switch and HART®
- Complete galvanic isolation

The rotation speed monitor IM21-14-CDTRI analyses frequencies, rotation speeds and pulse trains of rotating motor, gear or turbine parts according to over or undershoot of adjusted limit values. The current value is indicated on a display on the front of the device.

NAMUR sensors monitor the cables for wire-break and/or short-circuit depending on the setting. In the event of an input circuit error the relays drop out, the transistor is blocked and the Pwr LED changes to red.

The device can be configured and parametrized via PC (FDT/DTM); the appropriate TURCK-PROG III transmission cable is available from TURCK. A basic scope of parameters can be set via buttons and display on the front or remotely via the current interface and HART®.

At each of the two relay outputs a predefined limit value can be monitored. The two relays also monitor overshoot/undershoot of window limits. The transistor output can also be used as a pulse divider. The measured value is permanently written to a ring buffer with space for 8000 values. The writing process is stopped with a predefined trigger event, like for example “excess of limit value”. After that, the stored signal sequence can be read out.

A switching hysteresis is defined by setting a switch-on and off point. A switch-off delay can also be set to avoid shut down due to sudden frequency hops.

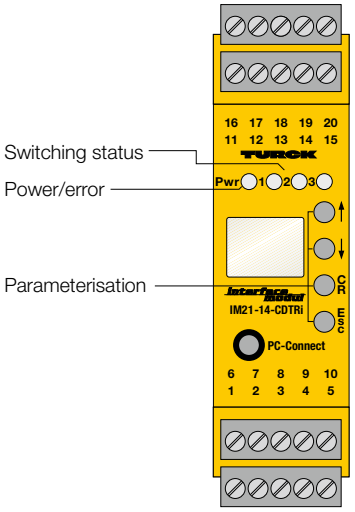

Output relay – Load curve

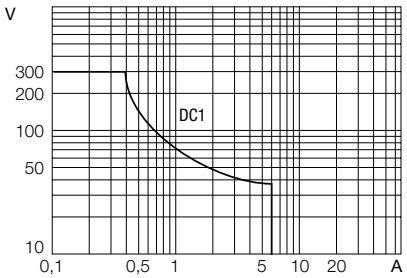

Output relay – Electrical lifetime

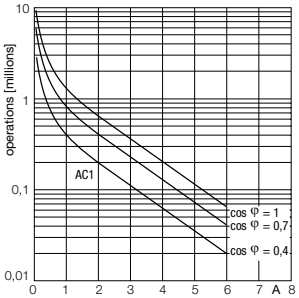

Hans Turck GmbH & Co. KG ▪ Tel. +49 208 49 52-0 ▪ Fax +49 208 49 52-264

Technical data

Type	IM21-14-CDTRI
Ident no.	7505650

Power supply	
Nominal voltage	Universal voltage supply unit
Operating voltage range	20…250 VDC
Operating voltage range	20…250 VAC
Frequency	40…70 Hz
Power consumption	≤ 3 W

Inputs	
No-load voltage	8.2 VDC
Short-circuit current	8.2 mA
Max. input frequency	600000 min^{-1}
Pulse time	≥ 0.02 ms
Pulse stop	≥ 0.02 ms
Input resistance	1 kΩ
Cable resistance	≤ 50 Ω
Switch-on threshold:	1.55 mA
Switch-off threshold:	1.75 mA
Short-circuit threshold	≥ 6 mA
Wire breakage threshold	≤ 0.1 mA
Current	≤ 20 mA
0-signal	0…3 VDC
1-signal	5…30 VDC
Input resistance	26000 Ω

Outputs	
Load resistance, current output	≤ 0.6 kΩ
Output current	0/4…20 mA
Output circuits (digital)	2 x relays (NO)
Switching frequency	≤ 10 Hz
Relay switching voltage	≤ 250 VAC/120 VDC
Switching current per output	≤ 2 A
Switching capacity per output	≤ 500 VA/60 W
Fault current	0 / 22 mA adjustable
Contact quality	AgNi, 3µ Au
Output circuits (digital)	1 x transistor (potential-free, short-circuit proof)
Switching voltage	≤ 30 VDC
Switching current per output	≤ 50 mA
Switching frequency	≤ 10000 Hz
Voltage drop	≤ 2.5 V
Voltage	≤ 30 V
Current	≤ 10 mA

Response characteristic	
Measuring accuracy	≤ 0.05 % of full scale
Reference temperature	23 °C
Temperature drift analogue output	0.0025 %/K

Indication	
Operational readiness	green
Pulse input	yellow
Error indication	red

Environmental Conditions	
Ambient temperature	-25…+70 °C
Storage temperature	-40…+80 °C
Relative humidity	≤ 95 %
Test voltage	2.5 kV

Mechanical data	
Tightening torque	0.5 Nm
Electrical connection	4 x 5-pin removable terminal blocks, reverse polarity protected, screw connection
Terminal cross-section	1 x 2.5 mm^2 / 2 x 1.5 mm^2
Housing material	Polycarbonate/ABS
Mounting instruction	for DIN rail / panel
Protection class	IP20
Flammability class acc. to UL 94	V-0
Dimensions	27 x 104 x 110 mm

Approval | Certification	TR CU

Rotation speed monitor, 1-channel

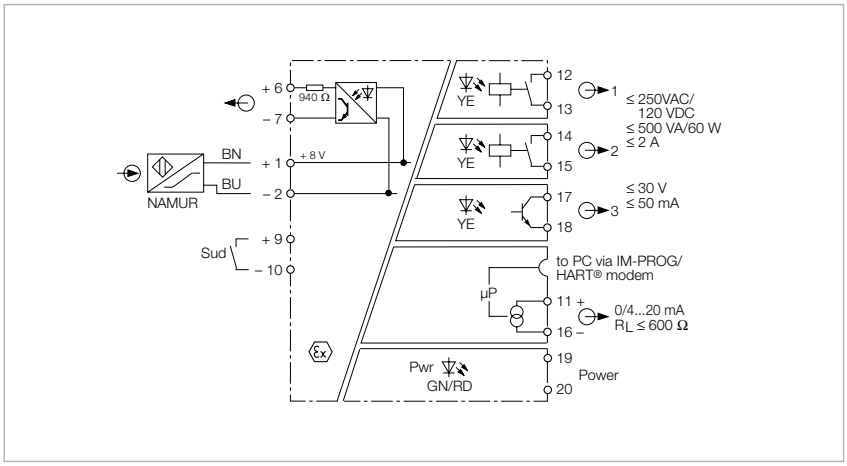

Features

- ATEX, IECEx, $_{C}FM_{US}$, TR CU, NEPSI, TIIS
- Installation in zone 2
- Monitors over and underrange of limit values and window limits
- Operating range 0.06 … 600000 min^{-1}
- Control of sensors acc. to EN 60947-5-6 (NAMUR)
- 2 x relay outputs and 1 x transistor output
- Current output 0/4…20 mA reversible
- Pulse output Ex nL II C/II B
- Parametrized via PC (FDT / DTM), front-panel switch or HART®
- Complete galvanic isolation

The rotation speed monitor IM21-14EX-CDTRI monitors frequencies, rotation speeds and pulse trains of rotating motor, gear or turbine parts according to over or undershoot of adjusted limit values. The current value is indicated on a display on the front of the device.

Intrinsically safe sensors acc. to EN 60947-5-6 (NAMUR) can be connected. The line is monitored for wire-break and/or short-circuit depending on the setting. In the event of an input circuit error the relays drop out, the transistor is blocked and the Pwr LED changes to red.

The device can be configured and parametrized via PC (FDT/DTM); the appropriate TURCK-PROG III transmission cable is available from TURCK. A basic scope of parameters can be set via buttons and display on the front or remotely via the current interface and HART®.

At each of the two relay outputs a predefined limit value can be monitored. The two relays also monitor overshoot/undershoot of window limits. The transistor output can also be used as a pulse divider. The measured value is permanently written to a ring buffer with space for 8000 values. The writing process is stopped with a predefined trigger event, like for example “excess of limit value“. After that, the stored signal sequence can be read out.

A switching hysteresis is defined by setting a switch-on and off point. A switch-off delay can also be set to avoid shut down due to sudden frequency hops.

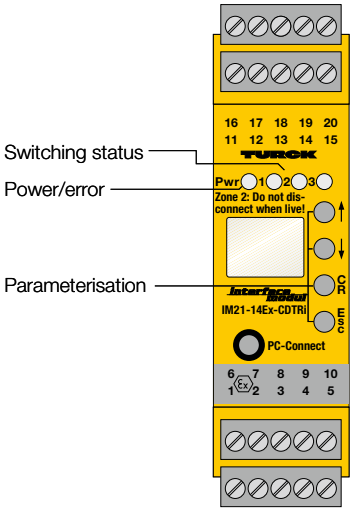

Output relay – Load curve

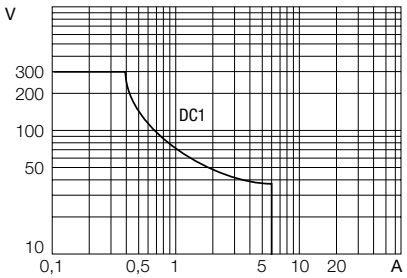

Output relay – Electrical lifetime

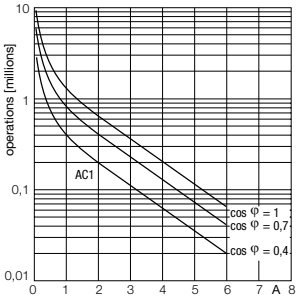

Technical data

Type	IM21-14EX-CDTRI
Ident no.	7505651

Power supply

Nominal voltage	Universal voltage supply unit
Operating voltage range	20…125 VDC
Operating voltage range	20…250 VAC
Frequency	40…70 Hz
Power consumption	≤ 3 W

Inputs

No-load voltage	8.2 VDC
Short-circuit current	8.2 mA
Max. input frequency	600000 min^{-1}
Pulse time	≥ 0.02 ms
Pulse stop	≥ 0.02 ms
Input resistance	1 kΩ
Cable resistance	≤ 50 Ω
Switch-on threshold:	1.55 mA
Switch-off threshold:	1.75 mA
Short-circuit threshold	≥ 6 mA
Wire breakage threshold	≤ 0.1 mA

Outputs

Load resistance, current output	≤ 0.6 kΩ
Output current	0/4…20 mA
Output circuits (digital)	2 x relays (NO)
Switching frequency	≤ 10 Hz
Relay switching voltage	≤ 250 VAC/120 VDC
Switching current per output	≤ 2 A
Switching capacity per output	≤ 500 VA/60 W
Fault current	0 / 22 mA adjustable
Contact quality	AgNi, 3µ Au
Output circuits (digital)	1 x transistor (potential-free, short-circuit proof)
Switching voltage	≤ 30 VDC
Switching current per output	≤ 50 mA
Switching frequency	≤ 10000 Hz
Voltage drop	≤ 2.5 V
Voltage	≤ 30 V
Current	≤ 10 mA

Response characteristic

Measuring accuracy	≤ 0.05 % of full scale
Reference temperature	23 °C
Temperature drift analogue output	0.0025 %/K

Approvals and declarations

Ex approval acc. to conformity certificate	IBExU 07 ATEX 1132
Device designation	Ⓔx II (1) G, II (1) D [Ex ia Ga] IIC , [Ex ia Da] IIIC
Max. values:	Terminal connection: 1+2 / 6+7 / 9+10
Max. output voltage U_o	≤ 9.6 V
Max. output current I_o	≤ 10.7 mA
Max. output power P_o	≤ 25 mW
Internal resistance R_i	900 Ω
Rated voltage	250 V
Characteristic	linear
Max. values:	Terminal connection: 6+7
Max. input voltage U_i	≤ 20 V
Max. input current I_i	≤ 21.3 mA
Max. input power P_i	≤ 400 mW
Internal inductance/capacitance L_i/C_i	negligibly small

External inductance/capacitance L_o/C_o

Ex ia	IIC			IIB		
L_o [mH]	100	5.0	1	100	5	1
C_o [µF]	0.51	0.84	1.2	2.7	4.4	6.3

Ex approval acc. to conformity certificate	IBExU 07 ATEX B010 X
Application area	II 3 G
Protection type	Ex nA nC [ic Gc] IIC/IIB T4 Gc
Max. values:	Terminal connection: 1+2 / 6+7 / 9+10
Max.output voltage U_o	≤ 9.6 V
Max. output current I_o	≤ 10.7 mA
Max. output power P_o	≤ 25 mW
Internal resistance R_i	900 Ω
Characteristic	linear
Max. values:	Terminal connection: 6+7
Max. input voltage U_i	≤ 20 V
Max. input current I_i	≤ 21.3 mA
Max. input power P_i	≤ 400 mW
Internal inductance/capacitance L_i/C_i	negligibly small

External inductance/capacitance L_o/C_o

Ex ic	IIC			IIB		
L_o [mH]	100	5.0	1	100	5	1
C_o [µF]	0.765	1.2	1.8	4.0	6.6	9.4

Indication

Operational readiness	green
Pulse input	yellow
Error indication	red

Environmental Conditions

Ambient temperature	-25…+70 °C
Storage temperature	-40…+80 °C
Relative humidity	≤ 95 %
Test voltage	2.5 kV

Mechanical data

Tightening torque	0.5 Nm
Electrical connection	4 x 5-pin removable terminal blocks, reverse polarity protected, screw connection
Terminal cross-section	1 x 2.5 mm^2 / 2 x 1.5 mm^2
Housing material	Polycarbonate/ABS
Mounting instruction	for DIN rail / panel
Protection class	IP20
Flammability class acc. to UL 94	V-0
Dimensions	27 x 104 x 110 mm

Approval | Certification	ATEX, IECEx, $_cFM_{us}$, TR CU, NEPSI, TIIS

Input analog signal isolator, 1-channel

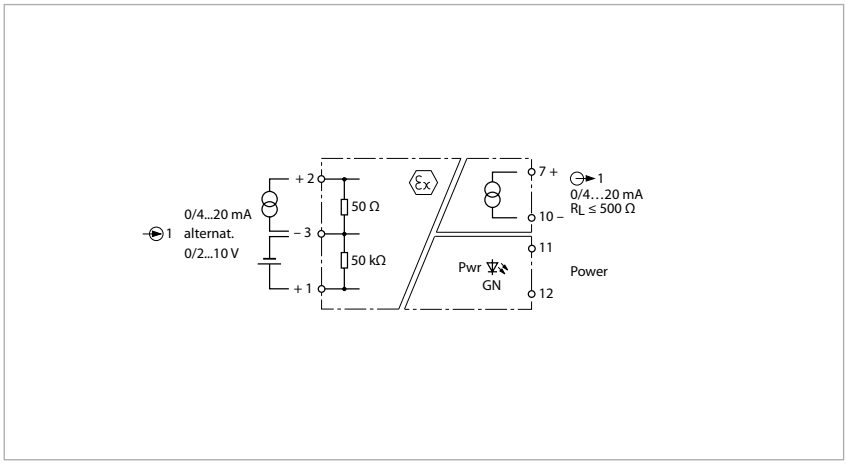

Features

- ATEX, IECEx, UL, $_{C}FM_{US}$, TR CU, NEPSI
- Installation in zone 2
- Transmission of normalized analog signals from the Ex area to the non-Ex area
- Input circuit: 0/2…10 V or 0/4…20 mA
- Output circuit: 0/4…20 mA
- Complete galvanic isolation

The 1-channel analog signal isolator IM31-11EX-I is designed to transmit normalized active voltage or current signals galvanically isolated from the Ex area to the non-Ex area.

The device is equipped with one input circuit of 0/2…10 V or 0/4…20 mA and one short-circuit proof output circuit of 0/4…20 mA.

The transmission characteristic is adjusted via a DIP switch on the front. In switch position "1:1", the input signal is transmitted directly to the output in the non-Ex area. In "LZ" switch position, a dead-zero signal at the input (0…10 V / 0…20 mA) is converted and provided as a live-zero signal at the associated output (4…20 mA).

A green LED indicates operational readiness.

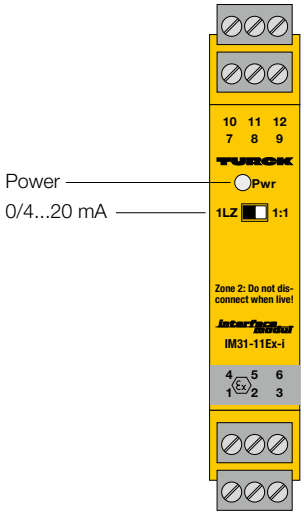

Hans Turck GmbH & Co. KG ▪ Tel. +49 208 49 52-0 ▪ Fax +49 208 49 52-264

Technical data

Type	IM31-11EX-I
Ident no.	7506320

Power supply	
Nominal voltage	Universal voltage supply unit
Operating voltage range	20…125 VDC
Operating voltage range	20…250 VAC
Frequency	40…70 Hz
Power consumption	≤ 2.2 W

Inputs	
Voltage input	0/2…10 VDC
Input resistance (voltage)	≥ 50 kΩ
Current input	0/4…20 mA
Input resistance (current)	≤ 50 Ω

Outputs	
Load resistance, current output	≤ 0.5 kΩ
Output current	0/4…20 mA

Response characteristic	
Measuring accuracy	≤ 0.2 % of full scale
Reference temperature	23 °C
Temperature drift	≤ 0.01 % / K
Rise time (10-90%)	≤ 50 ms
Dropout time (90…10%)	≤ 50 ms

Approvals and declarations	
Ex approval acc. to conformity certificate	TÜV 04 ATEX 2679
Device designation	Ⓔx II (1) G; II (1) D [Ex ia Ga] IIC/IIB; [Ex ia Da] IIIC
Max. values:	Terminal connection: 1…3
Max. output voltage U_o	≤ 7.2 V
Max. output current I_o	≤ 1 mA
Max. output power P_o	≤ 2 mW
Rated voltage	250 V
Characteristic	linear
Internal inductance/capacitance L_i/C_i	L_i = 65 µH; C_i = 52 nF

External inductance/capacitance L_o/C_o

Ex ia	IIC			IIB		
L_o [mH]	0.5	4.5	9.5	1.5	9.5	20
C_o [µF]	2	1.5	1.3	9	6.7	6.1

Ex approval acc. to conformity certificate	TÜV 06 ATEX 553387 X
Application area	II 3 G
Protection type	Ex nA [ic Gc] IIC/IIB T4 Gc
Max. values:	Terminal connection: 1…3
Max.output voltage U_o	≤ 7.2 V
Max. output current I_o	≤ 1 mA
Max. output power P_o	≤ 2 mW
Characteristic	linear

External inductance/capacitance L_o/C_o

Ex ic	IIC			IIB		
L_o [mH]	0.5	4.5	9.5	1.5	9.5	20
C_o [µF]	3.9	2.5	2.2	17	12	10

Indication	
Operational readiness	green

Environmental Conditions	
Ambient temperature	-25…+70 °C
Storage temperature	-40…+80 °C
Relative humidity	≤ 95 %
Test voltage	2.5 kV

Mechanical data	
Tightening torque	0.5 Nm
Electrical connection	4 x 3-pin removable terminal blocks, reverse polarity protected, screw connection
Terminal cross-section	1 x 2.5 mm² / 2 x 1.5 mm²
Housing material	Polycarbonate/ABS
Mounting instruction	for DIN rail / panel
Protection class	IP20
Flammability class acc. to UL 94	V-0
Dimensions	18 x 104 x 110 mm

Approval | Certification	ATEX, IECEx, UL, cFM$_{us}$, TR CU, NEPSI

Input analog signal isolator, 1-channel

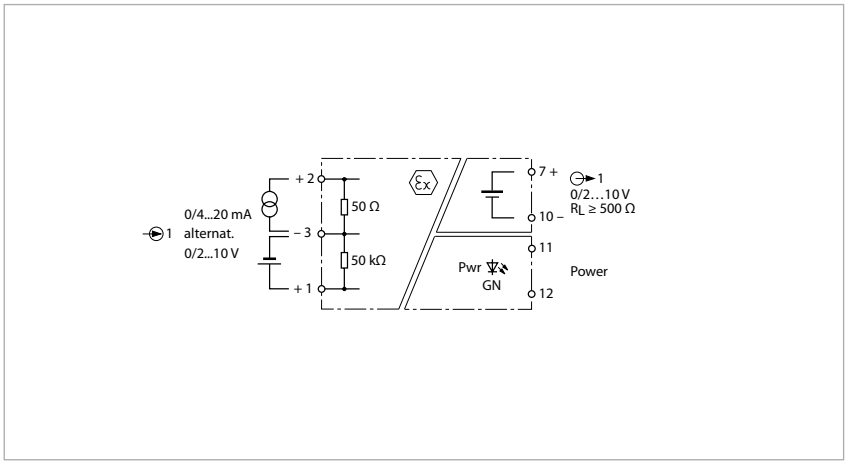

Features

- ATEX, IECEx, UL, $_{C}FM_{US}$, TR CU, NEPSI
- Installation in zone 2
- Transmission of normalized analog signals from the Ex area to the non-Ex area
- Input circuit: 0/2…10 V or 0/4…20 mA
- Output circuit: 0/2…10 V
- Complete galvanic isolation

Standard active voltage or current signals are transmitted via the 1-channel analog signal isolator IM31-11Ex-U.

The device is equipped with one input circuit of 0/2…10 V or 0/4…20 mA and one short-circuit proof output circuit of 0/2…10 V.

The transmission characteristic is adjusted via a DIP switch on the front. In switch position "1:1", the input signal is transmitted directly to the output in the non-Ex area. In "LZ" switch position, a dead-zero signal at the input (0…10 V / 0…20 mA) is converted and provided as a live-zero signal at the associated output (2…10 V).

A green LED indicates operational readiness.

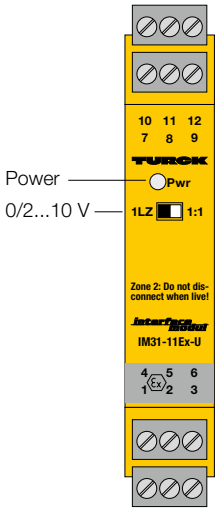

Technical data

Type	IM31-11EX-U
Ident no.	7506327

Power supply

Nominal voltage	Universal voltage supply unit
Operating voltage range	20…125 VDC
Operating voltage range	20…250 VAC
Frequency	40…70 Hz
Power consumption	≤ 2.2 W

Inputs

Voltage input	0/2…10 VDC
Input resistance (voltage)	≥ 50 kΩ
Current input	0/4…20 mA
Input resistance (current)	≤ 50 Ω

Outputs

Load resistance voltage output	≥ 0.5 kΩ
Output voltage	0/2…10 V

Response characteristic

Measuring accuracy	≤ 0.2 % of full scale
Reference temperature	23 °C
Temperature drift	≤ 0.01 % / K
Rise time (10-90%)	≤ 50 ms
Dropout time (90…10%)	≤ 50 ms

Approvals and declarations

Ex approval acc. to conformity certificate	TÜV 04 ATEX 2679
Device designation	⟨Ex⟩ II (1) G; II (1) D [Ex ia Ga] IIC/IIB; [Ex ia Da] IIIC
Max. values:	Terminal connection: 1…3
Max. output voltage U_o	≤ 7.2 V
Max. output current I_o	≤ 1 mA
Max. output power P_o	≤ 2 mW
Rated voltage	250 V
Characteristic	linear
Internal inductance/capacitance L_i/C_i	L_i = 65 µH; C_i = 52 nF

External inductance/capacitance L_o/C_o

Ex ia	IIC			IIB		
L_o [mH]	0.5	4.5	9.5	1.5	9.5	20
C_o [µF]	2	1.5	1.3	9	6.7	6.1

Ex approval acc. to conformity certificate	TÜV 06 ATEX 553387 X
Application area	II 3 G
Protection type	Ex nA [ic Gc] IIC/IIB T4 Gc
Max. values:	Terminal connection: 1…3
Max.output voltage U_o	≤ 7.2 V
Max. output current I_o	≤ 1 mA
Max. output power P_o	≤ 2 mW
Characteristic	linear

External inductance/capacitance L_o/C_o

Ex ic	IIC			IIB		
L_o [mH]	0.5	4.5	9.5	1.5	9.5	20
C_o [µF]	3.9	2.5	2.2	17	12	10

Indication

Operational readiness	green

Environmental Conditions

Ambient temperature	-25…+70 °C
Storage temperature	-40…+80 °C
Relative humidity	≤ 95 %
Test voltage	2.5 kV

Mechanical data

Tightening torque	0.5 Nm
Electrical connection	4 x 3-pin removable terminal blocks, reverse polarity protected, screw connection
Terminal cross-section	1 x 2.5 mm² / 2 x 1.5 mm²
Housing material	Polycarbonate/ABS
Mounting instruction	for DIN rail / panel
Protection class	IP20
Flammability class acc. to UL 94	V-0
Dimensions	18 x 104 x 110 mm

Approval | Certification	ATEX, IECEx, UL, cFM$_{us}$, TR CU, NEPSI

Input analog signal isolator, 1-channel

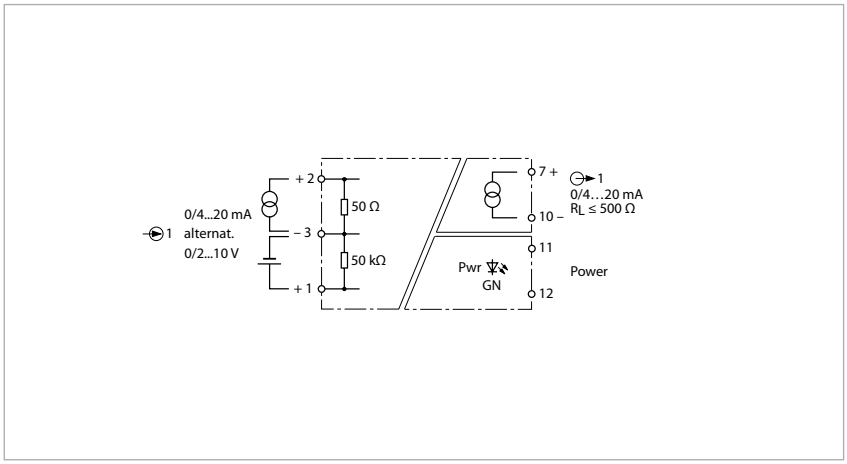

Features

- TR CU
- Transmission of normalized analog signals
- Input circuit: 0/2…10 V or 0/4…20 mA
- Output circuit: 0/4…20 mA
- Complete galvanic isolation

Standard active voltage or current signals are transmitted galvanically isolated via the 1-channel analog signal isolator IM31-11-I.

The device is equipped with one input circuit of 0/2…10 V or 0/4…20 mA and one short-circuit proof output circuit of 0/4…20 mA.

The transmission characteristic is adjusted via a DIP switch on the front. In switch position "1:1", the input signal is transmitted directly to the output. In "LZ" switch position, a dead-zero signal at the input (0…10 V / 0…20 mA) is converted and provided as a live-zero signal at the output (4…20 mA).

A green LED indicates operational readiness.

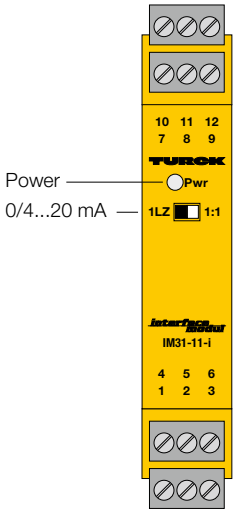

Hans Turck GmbH & Co. KG ▪ Tel. +49 208 49 52-0 ▪ Fax +49 208 49 52-264

Technical data

Type	IM31-11-I
Ident no.	7506323
Power supply	
Nominal voltage	Universal voltage supply unit
Operating voltage range	20…125 VDC
Operating voltage range	20…250 VAC
Frequency	40…70 Hz
Power consumption	≤ 2.2 W
Inputs	
Voltage input	0/2…10 VDC
Input resistance (voltage)	≥ 50 kΩ
Current input	0/4…20 mA
Input resistance (current)	≤ 50 Ω
Outputs	
Load resistance, current output	≤ 0.5 kΩ
Output current	0/4…20 mA
Response characteristic	
Measuring accuracy	≤ 0.1 % of full scale
Reference temperature	23 °C
Temperature drift	≤ 0.005 % / K
Rise time (10-90%)	≤ 50 ms
Dropout time (90…10%)	≤ 50 ms
Indication	
Operational readiness	green
Environmental Conditions	
Ambient temperature	-25…+70 °C
Storage temperature	-40…+80 °C
Relative humidity	≤ 95 %
Test voltage	2.5 kV
Mechanical data	
Tightening torque	0.5 Nm
Electrical connection	4 x 3-pin removable terminal blocks, reverse polarity protected, screw connection
Terminal cross-section	1 x 2.5 mm² / 2 x 1.5 mm²
Housing material	Polycarbonate/ABS
Mounting instruction	for DIN rail / panel
Protection class	IP20
Flammability class acc. to UL 94	V-0
Dimensions	18 x 104 x 110 mm
Approval | Certification	TR CU

Input analog signal isolator, 1-channel – Signal duplicating

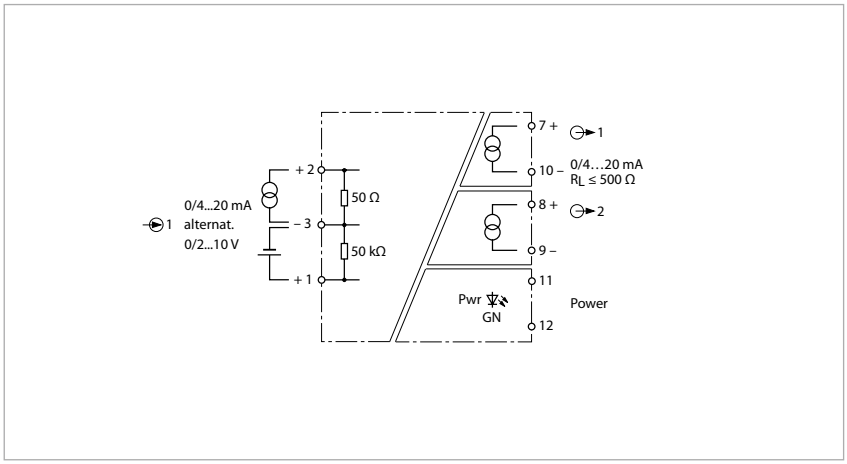

Features

- TR CU
- Transmission of normalized analog signals
- Input circuit: 0/2…10 V or 0/4…20 mA
- Output circuit: 2 x 0/4…20 mA
- Complete galvanic isolation

Standard active voltage or current signals are transmitted galvanically isolated via the 1-channel analog signal isolator IM31-12-I. The signal is duplicated and provided at both outputs.

The device features one input circuits of 0/2…10 V or 0/4…20 mA as well as two short-circuit proof output circuits of 0/4…20 mA.

The transmission characteristic is adjusted via a DIP switch on the front. In switch position "1:1", the input signal is transmitted directly to the outputs. In "LZ" switch position, a dead-zero signal at the input (0…10 V / 0…20 mA) is converted and provided as a live-zero signal at the output (4…20 mA).

A green LED indicates operational readiness.

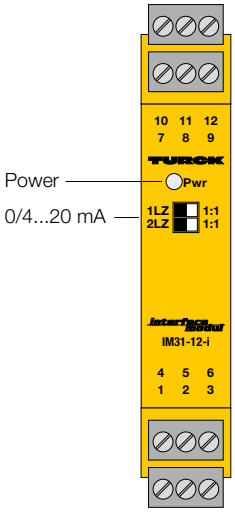

Technical data

Type	IM31-12-I
Ident no.	7506324
Power supply	
Nominal voltage	Universal voltage supply unit
Operating voltage range	20…125 VDC
Operating voltage range	20…250 VAC
Frequency	40…70 Hz
Power consumption	≤ 2.2 W
Inputs	
Voltage input	0/2…10 VDC
Input resistance (voltage)	≥ 50 kΩ
Current input	0/4…20 mA
Input resistance (current)	≤ 50 Ω
Outputs	
Load resistance, current output	≤ 0.5 kΩ
Output current	0/4…20 mA
Response characteristic	
Measuring accuracy	≤ 0.1 % of full scale
Reference temperature	23 °C
Temperature drift	≤ 0.005 % / K
Rise time (10-90%)	≤ 50 ms
Dropout time (90…10%)	≤ 50 ms
Indication	
Operational readiness	green
Environmental Conditions	
Ambient temperature	-25…+70 °C
Storage temperature	-40…+80 °C
Relative humidity	≤ 95 %
Test voltage	2.5 kV
Mechanical data	
Tightening torque	0.5 Nm
Electrical connection	4 x 3-pin removable terminal blocks, reverse polarity protected, screw connection
Terminal cross-section	1 x 2.5 mm² / 2 x 1.5 mm²
Housing material	Polycarbonate/ABS
Mounting instruction	for DIN rail / panel
Protection class	IP20
Flammability class acc. to UL 94	V-0
Dimensions	18 x 104 x 110 mm
Approval | Certification	TR CU

Input analog signal isolator, 1-channel – Signal duplicating

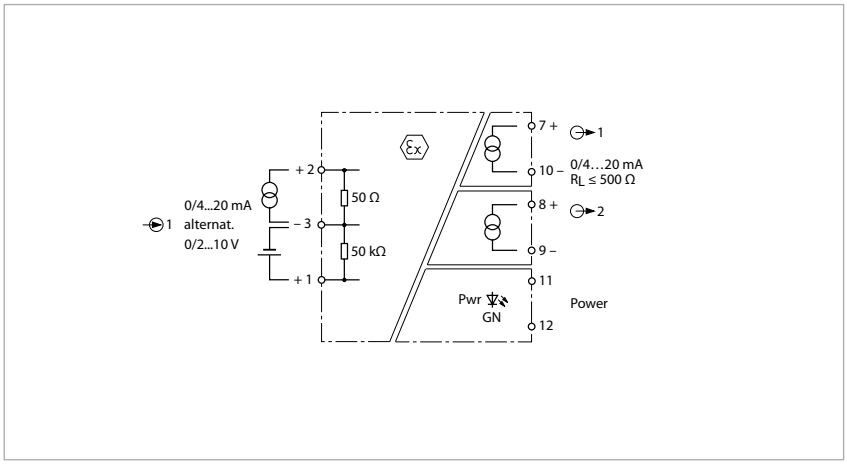

Features

- ATEX, IECEx, UL, $_{C}FM_{US}$, TR CU, NEPSI
- Installation in zone 2
- Transmission of normalized analog signals from the Ex area to the non-Ex area
- Input circuit: 0/2…10 V or 0/4…20 mA
- Output circuit: 2 x 0/4…20 mA
- Complete galvanic isolation

The 1-channel analog signal isolator IM31-12EX-I is designed to transmit normalized active voltage or current signals galvanically isolated from the Ex area to the non-Ex area. The signal is duplicated and provided at both outputs.

The device features one input circuits of 0/2…10 V or 0/4…20 mA as well as two short-circuit proof output circuits of 0/4…20 mA.

The transmission characteristic is adjusted via a DIP switch on the front. In switch position "1:1", the input signal is transmitted directly to the outputs in the non-Ex area. In "LZ" switch position, a dead-zero signal at the input (0…10 V / 0…20 mA) is converted and provided as a live-zero signal at the output (4…20 mA).

A green LED indicates operational readiness.

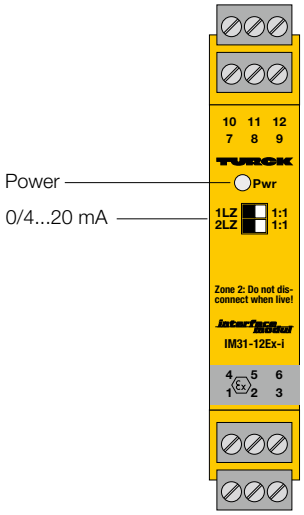

Technical data

Type	IM31-12EX-I
Ident no.	7506321

Power supply	
Nominal voltage	Universal voltage supply unit
Operating voltage range	20…125 VDC
Operating voltage range	20…250 VAC
Frequency	40…70 Hz
Power consumption	≤ 2.2 W

Inputs	
Voltage input	0/2…10 VDC
Input resistance (voltage)	≥ 50 kΩ
Current input	0/4…20 mA
Input resistance (current)	≤ 50 Ω

Outputs	
Load resistance, current output	≤ 0.5 kΩ
Output current	0/4…20 mA

Response characteristic	
Measuring accuracy	≤ 0.2 % of full scale
Reference temperature	23 °C
Temperature drift	≤ 0.01 % / K
Rise time (10-90%)	≤ 50 ms
Dropout time (90…10%)	≤ 50 ms

Approvals and declarations	
Ex approval acc. to conformity certificate	TÜV 04 ATEX 2679
Device designation	Ⓔx II (1) G; II (1) D [Ex ia Ga] IIC/IIB; [Ex ia Da] IIIC
Max. values:	Terminal connection: 1…3
Max. output voltage U_o	≤ 7.2 V
Max. output current I_o	≤ 1 mA
Max. output power P_o	≤ 2 mW
Rated voltage	250 V
Characteristic	linear
Internal inductance/capacitance L_i/C_i	L_i = 65 µH; C_i = 52 nF

External inductance/capacitance L_o/C_o

Ex ia	IIC			IIB		
L_o [mH]	0.5	4.5	9.5	1.5	9.5	20
C_o [µF]	2	1.5	1.3	9	6.7	6.1

Ex approval acc. to conformity certificate	TÜV 06 ATEX 553387 X
Application area	II 3 G
Protection type	Ex nA [ic Gc] IIC/IIB T4 Gc
Max. values:	Terminal connection: 1…3
Max.output voltage U_o	≤ 7.2 V
Max. output current I_o	≤ 1 mA
Max. output power P_o	≤ 2 mW
Characteristic	linear

External inductance/capacitance L_o/C_o

Ex ic	IIC			IIB		
L_o [mH]	0.5	4.5	9.5	1.5	9.5	20
C_o [µF]	3.9	2.5	2.2	17	12	10

Indication	
Operational readiness	green

Environmental Conditions	
Ambient temperature	-25…+70 °C
Storage temperature	-40…+80 °C
Relative humidity	≤ 95 %
Test voltage	2.5 kV

Mechanical data	
Tightening torque	0.5 Nm
Electrical connection	4 x 3-pin removable terminal blocks, reverse polarity protected, screw connection
Terminal cross-section	1 x 2.5 mm² / 2 x 1.5 mm²
Housing material	Polycarbonate/ABS
Mounting instruction	for DIN rail / panel
Protection class	IP20
Flammability class acc. to UL 94	V-0
Dimensions	18 x 104 x 110 mm

Approval | Certification	ATEX, IECEx, UL, cFM$_{us}$, TR CU, NEPSI

Input analog signal isolator, 2-channel

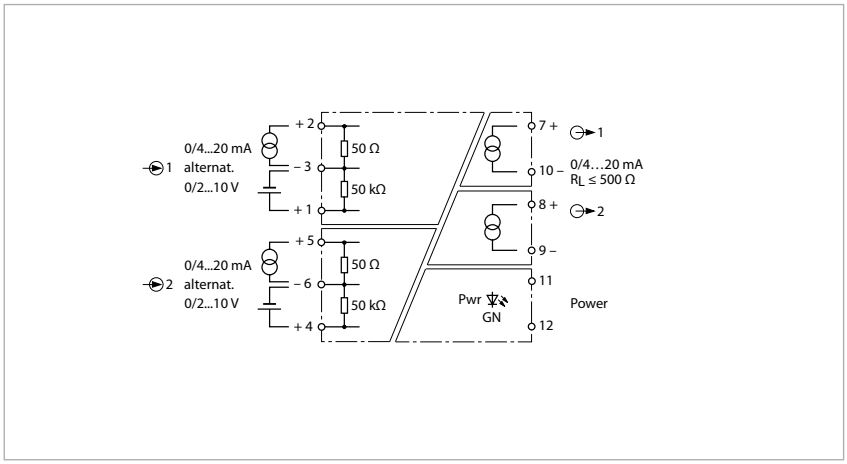

Features

- TR CU
- Transmission of normalized signals
- Input circuit: 2 x 0/2…10 V or 0/ 4…20 mA
- Output circuit: 2 x 0/4…20 mA
- Complete galvanic isolation

Standard active voltage or current signals are transmitted galvanically isolated via the 2-channel analog signal isolator IM31-22-I.

The device features two input circuits of 0/2…10 V or 0/4…20 mA as well as two short-circuit proof output circuits of 0/4…20 mA.

The transmission characteristic is adjusted via a DIP switch on the front. In „1: 1“ switch position, the input signals are transmitted directly to the outputs. In "LZ" switch position, a dead-zero signal at the input (0…10 V / 0…20 mA) is converted and provided as a live-zero signal at the output (4…20 mA).

A green LED indicates operational readiness.

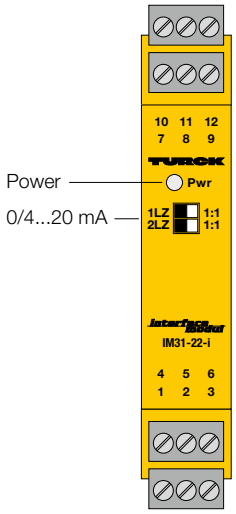

Technical data

Type	IM31-22-I
Ident no.	7506325
Power supply	
Nominal voltage	Universal voltage supply unit
Operating voltage range	20…125 VDC
Operating voltage range	20…250 VAC
Frequency	40…70 Hz
Power consumption	≤ 2.2 W
Inputs	
Voltage input	0/2…10 VDC
Input resistance (voltage)	≥ 50 kΩ
Current input	0/4…20 mA
Input resistance (current)	≤ 50 Ω
Outputs	
Load resistance, current output	≤ 0.5 kΩ
Output current	0/4…20 mA
Response characteristic	
Measuring accuracy	≤ 0.1 % of full scale
Reference temperature	23 °C
Temperature drift	≤ 0.005 % / K
Rise time (10-90%)	≤ 50 ms
Dropout time (90…10%)	≤ 50 ms
Indication	
Operational readiness	green
Environmental Conditions	
Ambient temperature	-25…+70 °C
Storage temperature	-40…+80 °C
Relative humidity	≤ 95 %
Test voltage	2.5 kV
Mechanical data	
Tightening torque	0.5 Nm
Electrical connection	4 x 3-pin removable terminal blocks, reverse polarity protected, screw connection
Terminal cross-section	1 x 2.5 mm² / 2 x 1.5 mm²
Housing material	Polycarbonate/ABS
Mounting instruction	for DIN rail / panel
Protection class	IP20
Flammability class acc. to UL 94	V-0
Dimensions	18 x 104 x 110 mm
Approval | Certification	TR CU

Input analog signal isolator, 2-channel

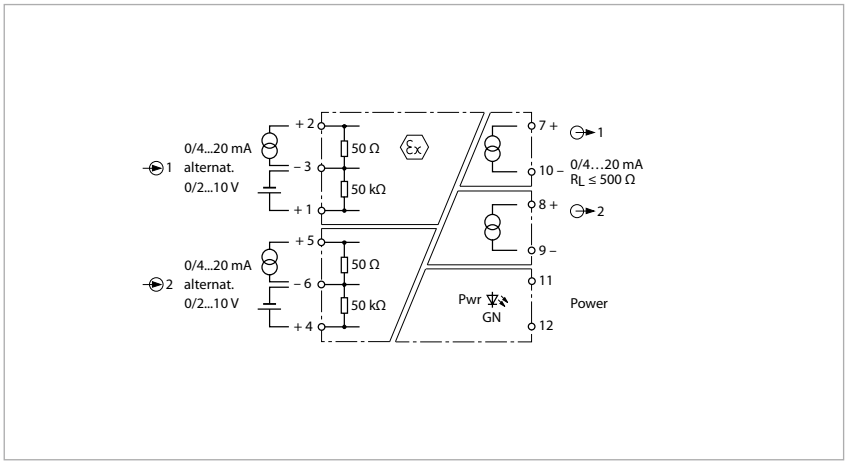

Features

- ATEX, IECEx, UL, $_{C}FM_{US}$, TR CU, NEPSI
- Installation in zone 2
- Transmission of normalized analog signals from the Ex area to the non-Ex area
- Input circuits: 0/2…10 V or 0/4…20 mA
- Output circuits: 0/4…20 mA
- Complete galvanic isolation

The 2-channel analog signal isolator IM31-22EX-I is designed to transmit normalized active voltage or current signals galvanically isolated from the Ex area to the non-Ex area.

The device features two input circuits of 0/2…10 V or 0/4…20 mA as well as two short-circuit proof output circuits of 0/4…20 mA.

The transmission characteristic is adjusted via a DIP switch on the front. In switch position "1:1", the input signals are transmitted directly to the outputs in the non-Ex area. In "LZ" switch position, a dead-zero signal at the input (0…10 V / 0…20 mA) is converted and provided as a live-zero signal at the output (4…20 mA).

A green LED indicates operational readiness.

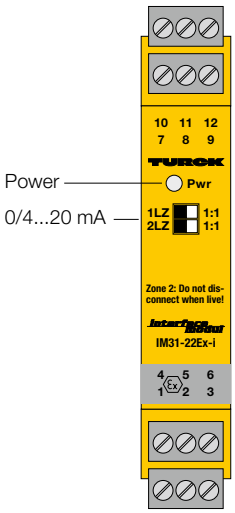

Technical data

Type	IM31-22EX-I
Ident no.	7506322

Power supply	
Nominal voltage	Universal voltage supply unit
Operating voltage range	20…125 VDC
Operating voltage range	20…250 VAC
Frequency	40…70 Hz
Power consumption	≤ 2.2 W

Inputs	
Voltage input	0/2…10 VDC
Input resistance (voltage)	≥ 50 kΩ
Current input	0/4…20 mA
Input resistance (current)	≤ 50 Ω

Outputs	
Load resistance, current output	≤ 0.5 kΩ
Output current	0/4…20 mA

Response characteristic	
Measuring accuracy	≤ 0.2 % of full scale
Reference temperature	23 °C
Temperature drift	≤ 0.01 % / K
Rise time (10-90%)	≤ 50 ms
Dropout time (90…10%)	≤ 50 ms

Approvals and declarations	
Ex approval acc. to conformity certificate	TÜV 04 ATEX 2679
Device designation	Ⓔx II (1) G; II (1) D [Ex ia Ga] IIC/IIB; [Ex ia Da] IIIC
Max. values:	Terminal connection: 1…3 / 4…6
Max. output voltage U_o	≤ 7.2 V
Max. output current I_o	≤ 1 mA
Max. output power P_o	≤ 2 mW
Rated voltage	250 V
Characteristic	linear
Internal inductance/capacitance L_i/C_i	L_i = 65 µH; C_i = 52 nF

External inductance/capacitance L_o/C_o

Ex ia	IIC			IIB		
L_o [mH]	0.5	4.5	9.5	1.5	9.5	20
C_o [µF]	2	1.5	1.3	9	6.7	6.1

Ex approval acc. to conformity certificate	TÜV 06 ATEX 553387 X
Application area	II 3 G
Protection type	Ex nA [ic Gc] IIC/IIB T4 Gc
Max. values:	Terminal connection: 1…3 / 4…6
Max.output voltage U_o	≤ 7.2 V
Max. output current I_o	≤ 1 mA
Max. output power P_o	≤ 2 mW
Characteristic	linear

External inductance/capacitance L_o/C_o

Ex ic	IIC			IIB		
L_o [mH]	0.5	4.5	9.5	1.5	9.5	20
C_o [µF]	3.9	2.5	2.2	17	12	10

Indication	
Operational readiness	green

Environmental Conditions	
Ambient temperature	-25…+70 °C
Storage temperature	-40…+80 °C
Relative humidity	≤ 95 %
Test voltage	2.5 kV

Mechanical data	
Tightening torque	0.5 Nm
Electrical connection	4 x 3-pin removable terminal blocks, reverse polarity protected, screw connection
Terminal cross-section	1 x 2.5 mm² / 2 x 1.5 mm²
Housing material	Polycarbonate/ABS
Mounting instruction	for DIN rail / panel
Protection class	IP20
Flammability class acc. to UL 94	V-0
Dimensions	18 x 104 x 110 mm

Approval | Certification	ATEX, IECEx, UL, cFM$_{us}$, TR CU, NEPSI

Input analog signal isolator, 2-channel

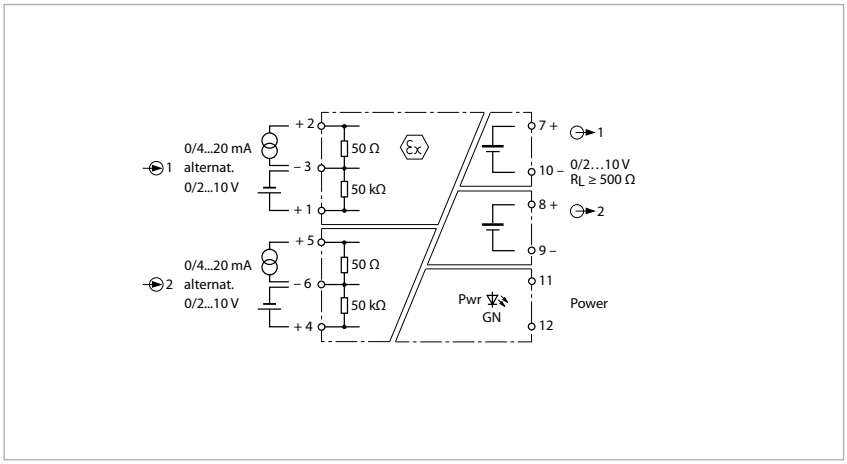

Features

- ATEX, IECEx, UL, $_{C}FM_{US}$, TR CU, NEPSI
- Installation in zone 2
- Transmission of normalized analog signals from the Ex area to the non-Ex area
- Input circuits: 0/2…10 V or 0/4…20 mA
- Output circuits: 0/2…10 V
- Complete galvanic isolation

The 2-channel analog signal isolator IM31-22EX-U is designed to transmit normalized active voltage or current signals galvanically isolated from the Ex area to the non-Ex area.

The device features two input circuits of 0/2…10 V or 0/4…20 mA as well as two short-circuit proof output circuits of 0…10 V.

The transmission characteristic is adjusted via a DIP switch on the front. In switch position "1:1", the input signals are transmitted directly to the outputs in the non-Ex area. In "LZ" switch position, a dead-zero signal at the input (0…10 V / 0…20 mA) is converted and provided as a live-zero signal at the output (0…10 V).

A green LED indicates operational readiness.

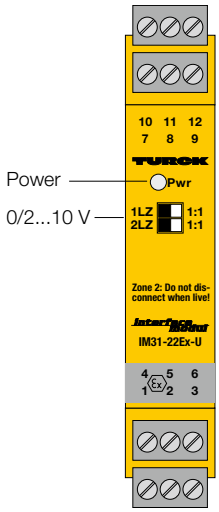

Technical data

Type	IM31-22EX-U
Ident no.	7506326

Power supply

Nominal voltage	Universal voltage supply unit
Operating voltage range	20…125 VDC
Operating voltage range	20…250 VAC
Frequency	40…70 Hz
Power consumption	≤ 2.2 W

Inputs

Voltage input	0/2…10 VDC
Input resistance (voltage)	≥ 50 kΩ
Current input	0/4…20 mA
Input resistance (current)	≤ 50 Ω

Outputs

Load resistance voltage output	≥ 0.5 kΩ
Output voltage	0/2…10 V

Response characteristic

Measuring accuracy	≤ 0.2 % of full scale
Reference temperature	23 °C
Temperature drift	≤ 0.01 % / K
Rise time (10-90%)	≤ 50 ms
Dropout time (90…10%)	≤ 50 ms

Approvals and declarations

Ex approval acc. to conformity certificate	TÜV 04 ATEX 2679
Device designation	⟨Ex⟩ II (1) G; II (1) D [Ex ia Ga] IIC/IIB; [Ex ia Da] IIIC
Max. values:	Terminal connection: 1…3 / 4…6
Max. output voltage U_o	≤ 7.2 V
Max. output current I_o	≤ 1 mA
Max. output power P_o	≤ 2 mW
Rated voltage	250 V
Characteristic	linear
Internal inductance/capacitance L_i/C_i	L_i = 65 µH; C_i = 52 nF

External inductance/capacitance L_o/C_o

Ex ia	IIC			IIB		
L_o [mH]	0.5	4.5	9.5	1.5	9.5	20
C_o [µF]	2	1.5	1.3	9	6.7	6.1

Ex approval acc. to conformity certificate	TÜV 06 ATEX 553387 X
Application area	II 3 G
Protection type	Ex nA [ic Gc] IIC/IIB T4 Gc
Max. values:	Terminal connection: 1…3 / 4…6
Max.output voltage U_o	≤ 7.2 V
Max. output current I_o	≤ 1 mA
Max. output power P_o	≤ 2 mW
Characteristic	linear

External inductance/capacitance L_o/C_o

Ex ic	IIC			IIB		
L_o [mH]	0.5	4.5	9.5	1.5	9.5	20
C_o [µF]	3.9	2.5	2.2	17	12	10

Indication

Operational readiness	green

Environmental Conditions

Ambient temperature	-25…+70 °C
Storage temperature	-40…+80 °C
Relative humidity	≤ 95 %
Test voltage	2.5 kV

Mechanical data

Tightening torque	0.5 Nm
Electrical connection	4 x 3-pin removable terminal blocks, reverse polarity protected, screw connection
Terminal cross-section	1 x 2.5 mm² / 2 x 1.5 mm²
Housing material	Polycarbonate/ABS
Mounting instruction	for DIN rail / panel
Protection class	IP20
Flammability class acc. to UL 94	V-0
Dimensions	18 x 104 x 110 mm

Approval | Certification	ATEX, IECEx, UL, cFM$_{us}$, TR CU, NEPSI

HART® isolating transducer, 1-channel

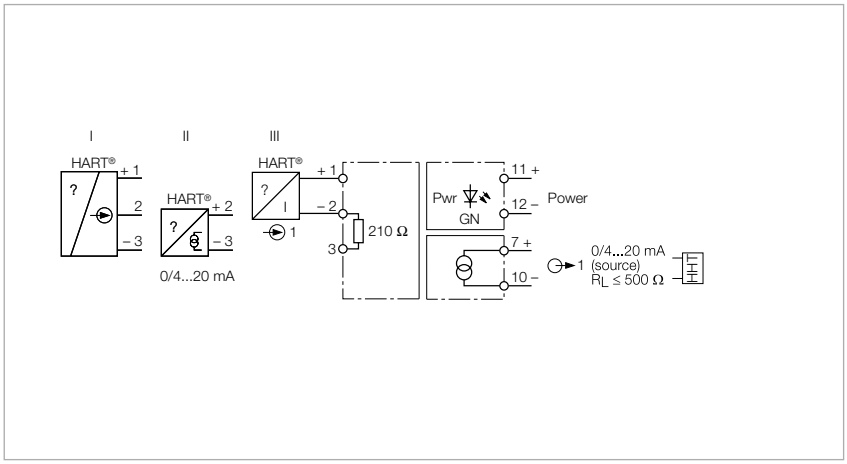

Features

- TR CU
- Power supply of 2-wire measuring transducers with HART® communication as well as connection to active 2-wire and passive 3-wire transmitters
- Input circuit: 0/4…20 mA
- Output circuit: 0/4…20 mA
- SIL2
- Removable terminal blocks, screwable, with 2 mm test socket
- Complete galvanic isolation

The 1-channel HART® isolating transducer IM33-11-HI/24VDC is designed to operate 2-wire HART® transducers (III) and to transmit the measured signal galvanically isolated. Besides the analog signals, digital HART® communication signals can also be transmitted bidirectionally.

Alternatively, active 2-wire HART® transmitters (II) and passive 3-wire HART® transmitters (I) can be operated.

The device features one input and one output circuit, each with 0/4…20 mA. A green LED indicates operational readiness.

The input signal is transmitted 1:1 and is presented to the relevant output in the non-Ex area.

Due to the 1:1 transmission characteristic, wire-break or short-circuit of in the measuring transducer circuit are indicated as currents of 0 mA resp. > 22.5 mA.

The removable terminal blocks feature test sockets (Ø 2 mm) for connection of a HART® handheld. Other device variants are available on request.

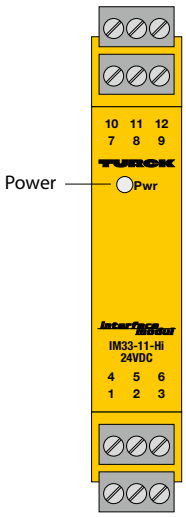

Technical data

Type	IM33-11-HI/24VDC
Ident no.	7506447
Power supply	
Nominal voltage	24 VDC
Operating voltage range	19…29 VDC
Power consumption	≤ 2.2 W
Inputs	
Supply voltage	≥ 17 V / 20 mA
Current	25 mA
Current input	0/4…20 mA
Input resistance (current)	≤ 250 Ω
Outputs	
Load resistance, current output	≤ 0.5 kΩ
Output current	0/4…20 mA
Wire break monitoring	≤ 0 mA
Short circuit monitoring	≥ 22 mA
Response characteristic	
Measuring accuracy	≤ 0.1 % of full scale
Reference temperature	23 °C
Temperature drift	≤ 0.005 % / K
Rise time (10-90%)	≤ 50 ms
Dropout time (90…10%)	≤ 50 ms
Approvals and declarations	
Declaration	SIL 2 acc. to EXIDA FMEDA
Indication	
Operational readiness	green
Environmental Conditions	
Ambient temperature	-25…+70 °C
Storage temperature	-40…+80 °C
Relative humidity	≤ 95 %
Test voltage	2.5 kV
MTTF	159 years acc. to SN 29500 (Ed. 99) 40 °C
Mechanical data	
Tightening torque	0.5 Nm
Electrical connection	4 x 3-pin removable terminal blocks with test socket, reverse polarity protected, screw connection
Terminal cross-section	1 x 2.5 mm² / 2 x 1.5 mm²
Housing material	Polycarbonate/ABS
Mounting instruction	for DIN rail / panel
Protection class	IP20
Flammability class acc. to UL 94	V-0
Dimensions	18 x 110 x 110 mm
Approval | Certification	TR CU

HART® isolating transducer, 1-channel

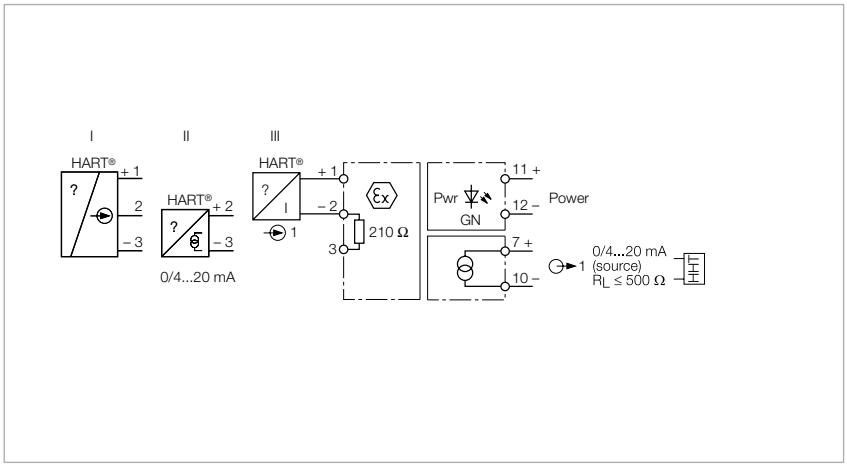

Features

- ATEX, IECEx, UL, $_{C}FM_{US}$, TR CU, TIIS, CCEO
- Installation in zone 2
- Power supply of 2-wire measuring transducers with HART® communication as well as connection to active 2-wire and passive 3-wire transmitters
- Input circuit: 0/4…20 mA
- Output circuit: 0/4…20 mA
- SIL2
- Removable terminal blocks, screwable, with 2 mm test socket
- Complete galvanic isolation

The 1-channel HART® isolating transducer IM33-22EX-HI/24 VDC is designed to operate intrinsically safe HART® 2-wire transducers (III) in the Ex area and to transmit the measured signals to the non-Ex area. Besides the analog signals, digital HART® communication signals can also be transmitted bidirectionally.

Alternatively, active 2-wire HART® transmitters (II) and passive 3-wire HART® transmitters (I) can be operated.

The device features one input and one output circuit, each with 0/4…20 mA. A green LED indicates operational readiness.

The input signal is transmitted 1:1 and is presented to the relevant output in the non-Ex area.

Due to the 1:1 transmission characteristic, wire-break or short-circuit of in the measuring transducer circuit are indicated as currents of 0 mA resp. > 22.5 mA.

The removable cage clamp terminals feature test sockets (Ø 2 mm) for connection of a HART® handheld.

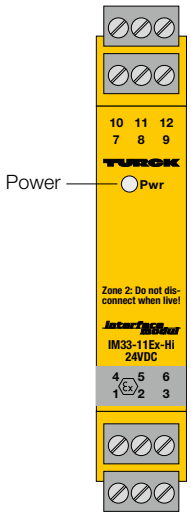

Technical data

Type	IM33-11EX-HI/24VDC
Ident no.	7506440

Power supply

Nominal voltage	24 VDC
Operating voltage range	19…29 VDC
Power consumption	≤ 2.2 W

Inputs

Supply voltage	≥ 17 V / 20 mA
Current	25 mA
Current input	0/4…20 mA
Input resistance (current)	≤ 250 Ω

Outputs

Load resistance, current output	≤ 0.5 kΩ
Output current	0/4…20 mA
Internal resistance R_i	317 Ω

Response characteristic

Measuring accuracy	≤ 0.1 % of full scale
Reference temperature	23 °C
Temperature drift	≤ 0.005 % / K
Rise time (10-90%)	≤ 50 ms
Dropout time (90…10%)	≤ 50 ms

Approvals and declarations

Ex approval acc. to conformity certificate	TÜV 00 ATEX 1595
Device designation	Ⓔx II (1) G, II (1) D [Ex ia Ga] IIC; [Ex ia Da] IIIC
Max. values:	Terminal connection: 1…3
Max. output voltage U_o	≤ 21.9 V
Max. output current I_o	≤ 95 mA
Max. output power P_o	≤ 747 mW
Rated voltage	250 V
Characteristic	Trapezoidal
Max. input voltage U_i	≤ 40 V
Max. input power P_i	≤ 650 mW

External inductance/capacitance L_o/C_o

Ex ia	IIC	IIB
L_o [mH]	2.8	11
C_o [µF]	0.057	0.370

Ex approval acc. to conformity certificate	TÜV 06 ATEX 552977 X
Application area	II 3 G
Protection type	Ex nA [ic Gc] IIC T4 Gc
Max. values:	Terminal connection: 1…3
Max.output voltage U_o	≤ 21.9 V
Max. output current I_o	≤ 95 mA
Characteristic	trapezoidal
Max. input voltage U_i	≤ 40 V
Max. input power P_i	≤ 650 mW

External inductance/capacitance L_o/C_o

Ex ic	IIC	IIB
L_o [mH]	3	10.0
C_o [µF]	0.12	0.81

Internal resistance R_i	331 Ω
Declaration	SIL 2 acc. to EXIDA FMEDA

Indication

Operational readiness	green

Environmental Conditions

Ambient temperature	-25…+70 °C
Storage temperature	-40…+80 °C
Relative humidity	≤ 95 %
Test voltage	2.5 kV
MTTF	159 years acc. to SN 29500 (Ed. 99) 40 °C

Mechanical data

Tightening torque	0.5 Nm
Electrical connection	4 x 3-pin removable terminal blocks with test socket, reverse polarity protected, screw connection
Terminal cross-section	1 x 2.5 mm² / 2 x 1.5 mm²
Housing material	Polycarbonate/ABS
Mounting instruction	for DIN rail / panel
Protection class	IP20
Flammability class acc. to UL 94	V-0
Dimensions	18 x 110 x 110 mm

Approval | Certification	ATEX, IECEx, UL, cFM$_{us}$, TR CU, TIIS, CCOE

Isolating transducer, 1-channel

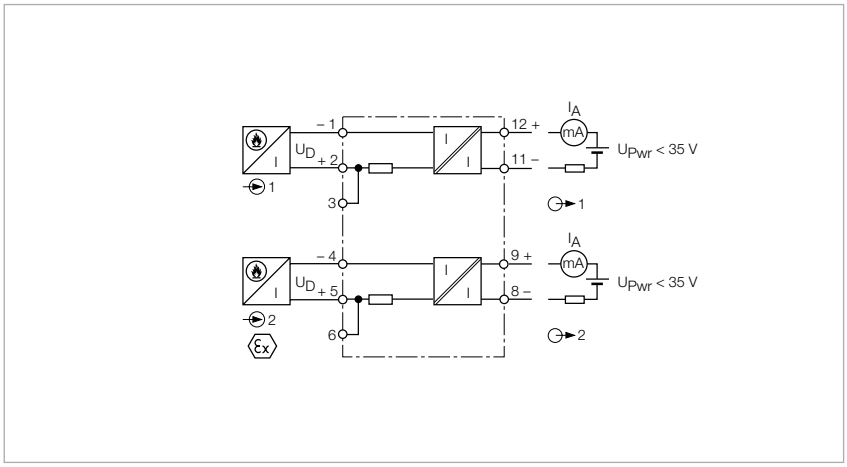

Features

- ATEX, $_{C}FM_{US}$, TR CU
- Isolating transducer without auxiliary power
- Power supply for fire and smoke detectors
- Signal transmission: 0…40 mA
- Removable terminal blocks, screwable, with 2 mm test socket
- Complete galvanic isolation

The 1-channel isolating transducer for fire and smoke detectors IM33-FSD-EX/L is designed especially for connection of conventional fire and smoke detectors in the Ex-area.

They are supplied with energy. Actuation of a smoke detector results in a current change and the according signal is transmitted to the non-Ex area. Several detectors can be connected to one circuit.

The isolating transducer is loop-powered and has to be connected directly to power-supplying input circuits of evaluation units. Thereby normalized current signals of 0/4…20 mA are transmitted. The voltage drop across the device is to be observed.

Input and output circuits are galvanically isolated from each other. The inputs of the isolating transducer are reverse polarity protected.

A current-to-ground error can be detected safely via an external current-to-ground detector.

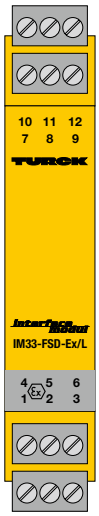

Technical data

Type	IM33-FSD-EX/L
Ident no.	7506433

Power supply	
Nominal voltage	24 VDC loop-powered

Inputs	
Supply voltage	U_{Pwr} - 1 VDC - 300 Ω x I_A
Supply voltage	≥ 17 V / 20 mA
Input resistance	300 Ω
Voltage input	max. 30 VDC
Current input	0/4…20 mA

Outputs	
Output circuits	0…40 mA
Load	≤ 500 Ω
Output current	0/4…20 mA

Response characteristic	
Measuring accuracy	≤ 2 % of full scale
Reference temperature	23 °C
Temperature drift	≤ 0.1 % / K
Rise time (10-90%)	≤ 10 ms
Dropout time (90…10%)	≤ 10 ms

Approvals and declarations	
Ex approval acc. to conformity certificate	TÜV 02 ATEX 1862
Device designation	⟨Ex⟩ II (1) GD [EEx ia] IIC
Max. output voltage U_o	≤ 27.3 V
Max. output current I_o	≤ 90 mA
Max. output power P_o	≤ 615 mW
Rated voltage	250 V
Characteristic	linear

External inductance/capacitance L_o/C_o

EEx ia	IIC	IIB
L_o[mH]	1	5
C_o[nF]	70	300

Environmental Conditions	
Ambient temperature	-20…+70 °C
Storage temperature	-40…+80 °C
Test voltage	2.5 kV

Mechanical data	
Tightening torque	0.5 Nm
Electrical connection	4 x 3-pin removable terminal blocks with test socket, reverse polarity protected, screw connection
Terminal cross-section	1 x 2.5 mm² / 2 x 1.5 mm²
Housing material	Polycarbonate/ABS
Mounting instruction	for DIN rail / panel
Protection class	IP20
Flammability class acc. to UL 94	V-0
Dimensions	18 x 110 x 110 mm

Approval | Certification	ATEX, $_cFM_{us}$, TR CU

HART® isolating transducer, 1-channel

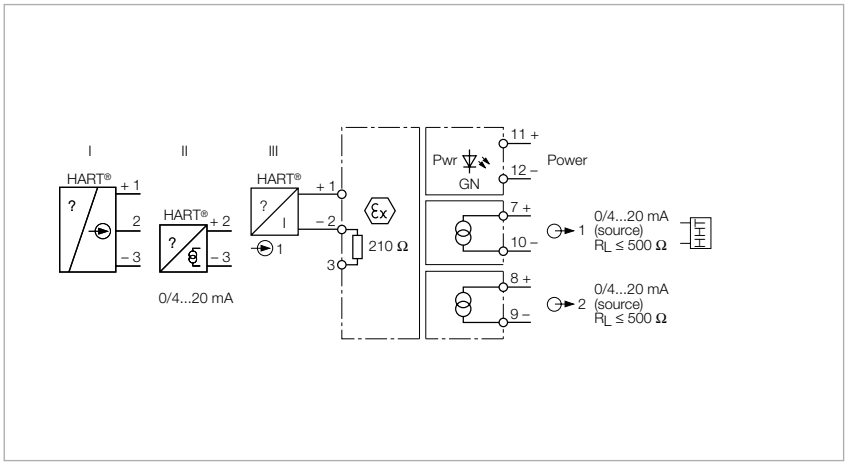

Features

- ATEX, IECEx, UL, $_{C}FM_{US}$, TR CU, TIIS, CCEO
- Installation in zone 2
- Power supply of 2-wire measuring transducers with HART® communication as well as connection to active 2-wire and passive 3-wire transmitters
- Input circuit: 0/4…20 mA
- Output circuits: 0/4…20 mA
- SIL2
- Removable terminal blocks, screwable, with 2 mm test socket
- Complete galvanic isolation

The 1-channel HART® isolating transducer IM33-22Ex-HI/24 VDC is designed to operate intrinsically safe HART® 2-wire transducers (III) in the Ex area and to transmit the measured signals to the non-Ex area. Besides the analog signals, digital HART® communication signals can also be transmitted bidirectionally.

Alternatively, active 2-wire HART® transmitters (II) and passive 3-wire HART® transmitters (I) can be operated.

The device features one input and two output circuits, for 0/4…20 mA. A green LED indicates operational readiness.

The input signal is transmitted 1:1 and is presented to the relevant outputs in the non-Ex area. The HART® signal is transmitted to output 1.

Due to the 1:1 transmission characteristic, wire-break or short-circuit of in the measuring transducer circuit are indicated as currents of 0 mA resp. > 22.5 mA.

The removable cage clamp terminals feature test sockets (Ø 2 mm) for connection of a HART® handheld.

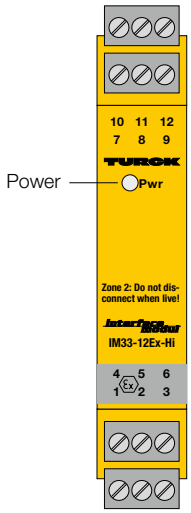

Technical data

Type	IM33-12EX-HI/24VDC
Ident no.	7506446

Power supply

Nominal voltage	24 VDC
Operating voltage range	19…29 VDC
Power consumption	≤ 3.2 W

Inputs

Supply voltage	≥ 17 V / 20 mA
Current input	0/4…20 mA
Input resistance (current)	≤ 250 Ω

Outputs

Load resistance, current output	≤ 0.5 kΩ
Output current	0/4…20 mA
Internal resistance R_i	317 Ω

Response characteristic

Measuring accuracy	≤ 0.1 % of full scale
Reference temperature	23 °C
Temperature drift	≤ 0.005 % / K
Rise time (10-90%)	≤ 50 ms
Dropout time (90…10%)	≤ 50 ms

Approvals and declarations

Ex approval acc. to conformity certificate	TÜV 00 ATEX 1595
Device designation	⟨Ex⟩ II (1) G, II (1) D [Ex ia Ga] IIC; [Ex ia Da] IIIC
Max. values:	Terminal connection: 1…3
Max. output voltage U_o	≤ 21.9 V
Max. output current I_o	≤ 95 mA
Max. output power P_o	≤ 747 mW
Rated voltage	250 V
Characteristic	Trapezoidal
Max. input voltage U_i	≤ 40 V
Max. input power P_i	≤ 650 mW

External inductance/capacitance L_o/C_o

Ex ia	IIC	IIB
L_o [mH]	2.8	11
C_o [µF]	0.057	0.370

Ex approval acc. to conformity certificate	TÜV 06 ATEX 552977 X
Application area	II 3 G
Protection type	Ex nA [ic Gc] IIC T4 Gc
Max. values:	Terminal connection: 1…3
Max.output voltage U_o	≤ 21.9 V
Max. output current I_o	≤ 95 mA
Characteristic	trapezoidal
Max. input voltage U_i	≤ 40 V
Max. input power P_i	≤ 650 mW

External inductance/capacitance L_o/C_o

Ex ic	IIC	IIB
L_o [mH]	3	10.0
C_o [µF]	0.12	0.81

Internal resistance R_i	331 Ω
Declaration	SIL 2 acc. to EXIDA FMEDA

Indication

Operational readiness	green

Environmental Conditions

Ambient temperature	-25…+70 °C
Storage temperature	-40…+80 °C
Relative humidity	≤ 95 %
Test voltage	2.5 kV
MTTF	159 years acc. to SN 29500 (Ed. 99) 40 °C

Mechanical data

Tightening torque	0.5 Nm
Electrical connection	4 x 3-pin removable terminal blocks with test socket, reverse polarity protected, screw connection
Terminal cross-section	1 x 2.5 mm² / 2 x 1.5 mm²
Housing material	Polycarbonate/ABS
Mounting instruction	for DIN rail / panel
Protection class	IP20
Flammability class acc. to UL 94	V-0
Dimensions	18 x 110 x 110 mm

Approval | Certification	ATEX, IECEx, UL, cFM$_{us}$, TR CU, TIIS, CCOE

HART® isolating transducer, 1-channel

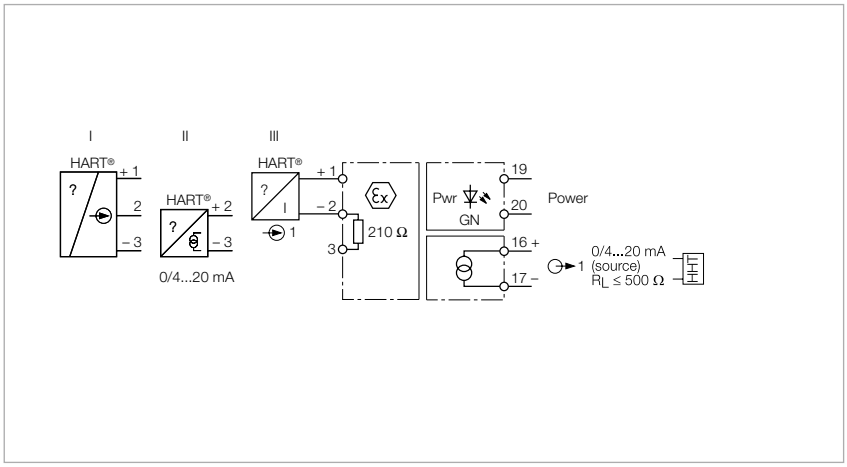

Features

- ATEX, IECEx, $_{C}FM_{US}$, TR CU, INMETRO
- Installation in zone 2
- Power supply of 2-wire measuring transducers with HART® communication as well as connection to active 2-wire and passive 3-wire transmitters
- Input circuit: 0/4…20 mA
- Output circuit: 0/4…20 mA
- Removable terminal blocks, screwable, with 2 mm test socket
- Complete galvanic isolation

The 1-channel HART® isolating transducer IM33-11EX-HI is designed to operate intrinsically safe HART® 2-wire transducers (III) in the Ex area and to transmit the measured signal to the non-Ex area. Besides the analog signals, digital HART® communication signals can also be transmitted bidirectionally.

Alternatively, active 2-wire HART® transmitters (II) and passive 3-wire HART® transmitters (I) can be operated.

The device features one input and one output circuit, for 0/4…20 mA. A green LED indicates operational readiness.

The input signal is transmitted 1:1 and is presented to the relevant output in the non-Ex area.

Due to the 1:1 transmission characteristic, wire-break or short-circuit of in the measuring transducer circuit are indicated as currents of 0 mA resp. > 22.5 mA.

The removable cage clamp terminals feature test sockets (Ø 2 mm) for connection of a HART® handheld.

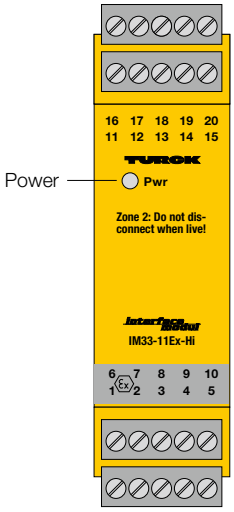

Technical data

Type	IM33-11EX-HI
Ident no.	7506443

Power supply

Nominal voltage	Universal voltage supply unit
Operating voltage range	20…125 VDC
Operating voltage range	20…250 VAC
Frequency	40…70 Hz
Power consumption	≤ 3 W

Inputs

Supply voltage	≥ 17 V / 20 mA
Current	25 mA
Current input	0/4…20 mA
Input resistance (current)	≤ 250 Ω

Outputs

Load resistance, current output	≤ 0.5 kΩ
Output current	0/4…20 mA

Response characteristic

Measuring accuracy	≤ 0.1 % of full scale
Reference temperature	23 °C
Temperature drift	≤ 0.005 % / K
Rise time (10-90%)	≤ 50 ms
Dropout time (90…10%)	≤ 50 ms

Approvals and declarations

Ex approval acc. to conformity certificate	TÜV 05 ATEX 2910
Device designation	Ⓔx II (1) G; II (1) D [Ex ia Ga] IIC; [Ex ia Da] IIIC
Max. values:	Terminal connection: 1…3
Max. output voltage U_o	≤ 21.3 V
Max. output current I_o	≤ 86 mA
Max. output power P_o	≤ 675 mW
Internal resistance R_i	365 Ω
Rated voltage	250 V
Characteristic	Trapezoidal

External inductance/capacitance L_o/C_o

Ex ia	IIC	IIB
L_o [mH]	0.47	10
C_o [µF]	0.093	0.45

Ex approval acc. to conformity certificate	TÜV 06 ATEX 2967 X
Application area	II 3 G
Protection type	Ex nA [ic Gc] IIC T4 Gc
Max. values:	Terminal connection: 1…3
Max.output voltage U_o	≤ 21.3 V
Max. output current I_o	≤ 86 mA
Max. output power P_o	≤ 675 mW
Characteristic	trapezoidal
Internal inductance/capacitance L_i/C_i	L_i = 75 µH, C_i negligibly small

External inductance/capacitance L_o/C_o

	Ex nL IIC	Ex nL IIB
L_o [mH]	4.5	10
C_o [nF]	157	890

Internal resistance R_i	365 Ω

Indication

Operational readiness	green

Environmental Conditions

Ambient temperature	-25…+70 °C
Storage temperature	-40…+80 °C
Test voltage	2.5 kV

Mechanical data

Tightening torque	0.5 Nm
Electrical connection	4 x 5-pin removable terminal blocks with test socket, reverse polarity protected, screw connection
Terminal cross-section	1 x 2.5 mm² / 2 x 1.5 mm²
Housing material	Polycarbonate/ABS
Mounting instruction	for DIN rail / panel
Protection class	IP20
Flammability class acc. to UL 94	V-0
Dimensions	27 x 110 x 110 mm

Approval | Certification	ATEX, IECEx, cFMus, TR CU, INMETRO

HART® isolating transducer, 1-channel

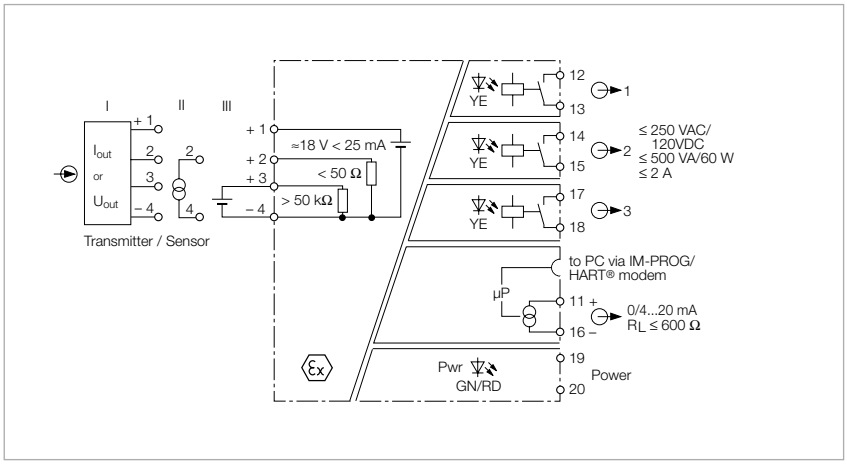

Features

- ATEX, IECEx, TR CU
- Intrinsically safe input circuit Ex ia
- Installation in zone 2
- Monitors over and underrange of analog values and window limits
- Parametrized via PC (FDT / DTM), front-panel switch or HART®
- Power supply of 2 and 3-wire measuring transducers
- Suited for active and passive signals
- Output circuit: 0/4…20 mA, reversible
- 3 relay outputs
- Complete galvanic isolation

The 1-channel isolating transducer IM33-14EX-CDRI is designed to operate intrinsically safe transmitters in the Ex area and to transmit the measured signals to the non-Ex area.

The device features one output for analog signals 0/4…20 mA and three outputs for limit value relays. The measured value can be viewed on a 2-line display. A green LED indicates operational readiness, 3 yellow LEDs indicate the switching status of the individual channels.

The measured value is permanently written to a ring buffer with space for 8000 values. The writing process is stopped with a predefined trigger event, like for example “excess of limit value“. After that, the stored signal sequence can be read out.

The device can be parametrized and configured via PC (FDT / DTM). For this, connect the device to the PC via the 3.5 mm jack on the front (the matching transmission cable IM-PROG III can be ordered separately from TURCK). A basic scope of parameters can be set via buttons and display on the front or remotely via the current interface and HART®.

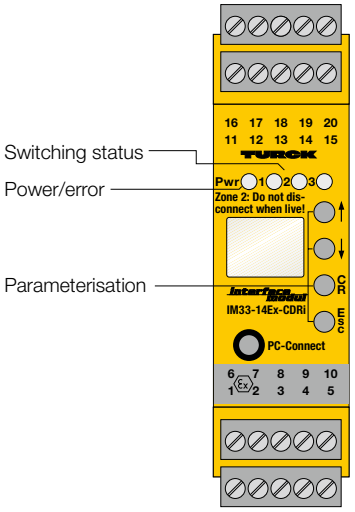

Output relay – Load curve

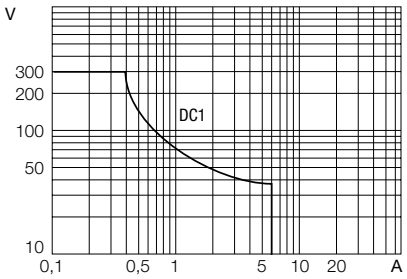

Output relay – Electrical lifetime

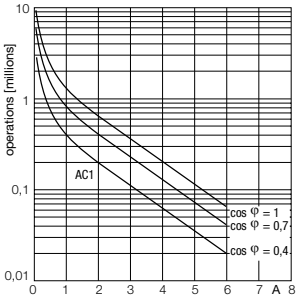

Technical data

Type	IM33-14EX-CDRI
Ident no.	7560015

Power supply

Nominal voltage	Universal voltage supply unit
Operating voltage range	20…125 VDC
Operating voltage range	20…250 VAC
Frequency	40…70 Hz
Power consumption	≤ 3 W
Residual ripple	≤ 10 mV_{ss}

Inputs

Supply voltage	≥ 17 V / 20 mA
Current	25 mA
Voltage input	0/2…10 VDC
Current input	0/4…20 mA

Outputs

Load resistance, current output	≤ 0.6 kΩ
Output current	0/4…20 mA
Output circuits (digital)	3 x relays (NO)
Switching frequency	≤ 10 Hz
Relay switching voltage	≤ 250 VAC/120 VDC
Switching current per output	≤ 2 A
Switching capacity per output	≤ 500 VA/60 W
Fault current	0 / 22 mA adjustable
Contact quality	AgNi, 3µ Au

Response characteristic

Measuring accuracy	≤ 0.05 % of full scale
Reference temperature	23 °C
Temperature drift analogue output	0.0025 %/K

Approvals and declarations

Ex approval acc. to conformity certificate	IBExU 07 ATEX 1156
Device designation	⟨Ex⟩ II (1) G, II (1) D [Ex ia Ga] IIC; [Ex ia Da] IIIC
Max. values:	Terminal connection: 1…4
Max. output voltage U_o	≤ 21.6 V
Max. output current I_o	≤ 85 mA
Max. output power P_o	≤ 459 mW
Internal resistance R_i	408 Ω
Rated voltage	250 V
Characteristic	Trapezoidal
Max. input voltage U_i	≤ 40 V
Max. input power P_i	≤ 600 mW
Internal inductance/capacitance L_i/C_i	negligible

External inductance/capacitance L_o/C_o

Ex ia	IIC		IIB		
L_o [mH]	0.3	0.15	5	1	0.15
C_o [µF]	30	50	630	680	950

Ex approval acc. to conformity certificate	IBExU 07 ATEX B015 X
Application area	II 3 G
Protection type	Ex nA nC [ic Gc] IIC T4 Gc
Max. values:	Terminal connection: 1…4
Max.output voltage U_o	≤ 21.6 V
Max. output current I_o	≤ 85 mA
Max. output power P_o	≤ 459 mW
Internal resistance R_i	408 Ω
Characteristic	trapezoidal
Max. input voltage U_i	≤ 40 V
Max. input power P_i	≤ 600 mW
Internal inductance/capacitance L_i/C_i	negligible

External inductance/capacitance L_o/C_o

Ex ic	IIC			IIB		
L_o [mH]	4	0.5	0.15	5	1	0.15
C_o [µF]	0.17	0.21	0.25	1	1.2	1.4

Indication

Operational readiness	green
Switching state	yellow
Error indication	red

Environmental Conditions

Ambient temperature	-25…+70 °C
Storage temperature	-40…+80 °C
Test voltage	2.5 kV

Mechanical data

Tightening torque	0.5 Nm
Electrical connection	4 x 5-pin removable terminal blocks, reverse polarity protected, screw connection
Terminal cross-section	1 x 2.5 mm^2 / 2 x 1.5 mm^2
Housing material	Polycarbonate/ABS
Mounting instruction	for DIN rail / panel
Protection class	IP20
Flammability class acc. to UL 94	V-0
Dimensions	27 x 104 x 110 mm

Approval | Certification	ATEX, IECEx, TR CU

HART® isolating transducer, 1-channel

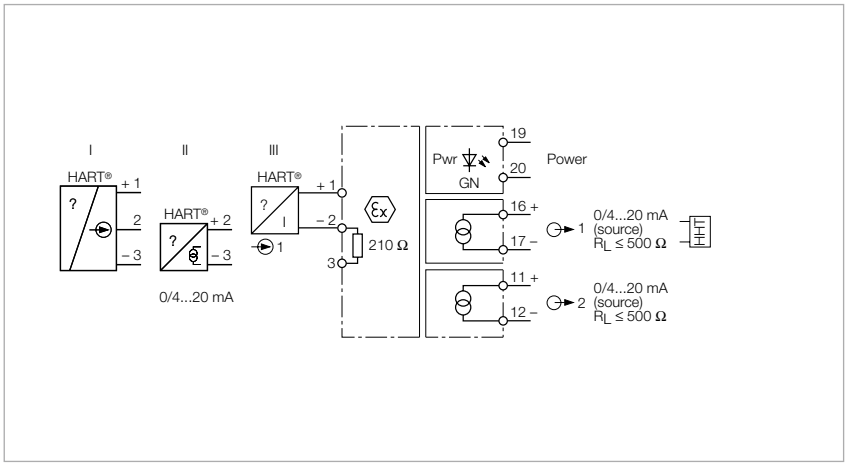

Features

- ATEX, IECEx, $_{C}FM_{US}$, TR CU, INMETRO
- Installation in zone 2
- Power supply of 2-wire measuring transducers with HART® communication as well as connection to active 2-wire and passive 3-wire transmitters
- Input circuit: 0/4…20 mA
- Output circuit: 0/4…20 mA
- Removable terminal blocks, screwable, with 2 mm test socket
- Complete galvanic isolation

The 1-channel HART® isolating transducer IM33-12EX-HI is designed to operate intrinsically safe HART® 2-wire transducers (III) in the Ex area and to transmit the measured signals to the non-Ex area. Besides the analog signals, digital HART® communication signals can also be transmitted bidirectionally.

Alternatively, active 2-wire HART® transmitters (II) and passive 3-wire HART® transmitters (I) can be operated.

The device features one input and two output circuits, for 0/4…20 mA. A green LED indicates operational readiness.

The input signal is transmitted 1:1 and is presented to the relevant outputs in the non-Ex area. The HART® signal is transmitted to output 1.

Due to the 1:1 transmission characteristic, wire-break or short-circuit of in the measuring transducer circuit are indicated as currents of 0 mA resp. > 22.5 mA.

The removable cage clamp terminals feature test sockets (Ø 2 mm) for connection of a HART® handheld.

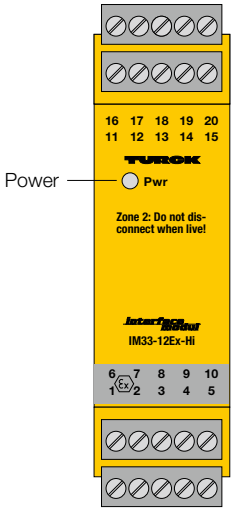

Technical data

Type	IM33-12EX-HI
Ident no.	7506444

Power supply

Nominal voltage	Universal voltage supply unit
Operating voltage range	20…125 VDC
Operating voltage range	20…250 VAC
Frequency	40…70 Hz
Power consumption	≤ 3 W
Residual ripple	≤ 10 mV_{ss}

Inputs

Supply voltage	≥ 17 V / 20 mA
Current	25 mA
Current input	0/4…20 mA
Input resistance (current)	≤ 250 Ω

Outputs

Load resistance, current output	≤ 0.5 kΩ
Output current	0/4…20 mA

Response characteristic

Measuring accuracy	≤ 0.1 % of full scale
Reference temperature	23 °C
Temperature drift	≤ 0.005 % / K
Rise time (10-90%)	≤ 50 ms
Dropout time (90…10%)	≤ 50 ms

Approvals and declarations

Ex approval acc. to conformity certificate	TÜV 05 ATEX 2910
Device designation	⟨Ex⟩ II (1) G; II (1) D [Ex ia Ga] IIC; [Ex ia Da] IIIC
Max. values:	Terminal connection: 1…3
Max. output voltage U_o	≤ 21.3 V
Max. output current I_o	≤ 86 mA
Max. output power P_o	≤ 675 mW
Internal resistance R_i	365 Ω
Rated voltage	250 V
Characteristic	Trapezoidal

External inductance/capacitance L_o/C_o

Ex ia	IIC	IIB
L_o [mH]	0.47	10
C_o [µF]	0.093	0.45

Ex approval acc. to conformity certificate	TÜV 06 ATEX 2967 X
Application area	II 3 G
Protection type	Ex nA [ic Gc] IIC T4 Gc
Max. values:	Terminal connection: 1…3
Max.output voltage U_o	≤ 21.3 V
Max. output current I_o	≤ 86 mA
Max. output power P_o	≤ 675 mW
Characteristic	trapezoidal
Internal inductance/capacitance L_i/C_i	L_i = 75 µH, C_i negligibly small

External inductance/capacitance L_o/C_o

	Ex nL IIC	Ex nL IIB
L_o [mH]	4.5	10
C_o [nF]	157	890

Internal resistance R_i	365 Ω

Indication

Operational readiness	green

Environmental Conditions

Ambient temperature	-25…+70 °C
Storage temperature	-40…+80 °C
Test voltage	2.5 kV

Mechanical data

Tightening torque	0.5 Nm
Electrical connection	4 x 5-pin removable terminal blocks with test socket, reverse polarity protected, screw connection
Terminal cross-section	1 x 2.5 mm^2 / 2 x 1.5 mm^2
Housing material	Polycarbonate/ABS
Mounting instruction	for DIN rail / panel
Protection class	IP20
Flammability class acc. to UL 94	V-0
Dimensions	27 x 110 x 110 mm

Approval | Certification	ATEX, IECEx, $_cFM_{us}$, TR CU, INMETRO

HART® isolating transducer, 2-channel

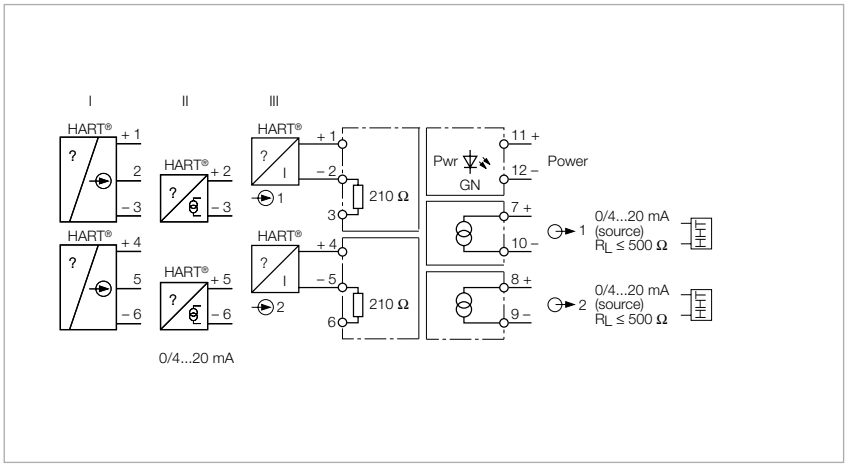

Features

- TR CU
- Power supply of 2-wire measuring transducers with HART® communication as well as connection to active 2-wire and passive 3-wire transmitters
- Input circuit: 0/4…20 mA
- Output circuit: 0/4…20 mA
- SIL 2
- Removable terminal blocks, screwable, with 2 mm test socket
- Complete galvanic isolation

The 2-channel HART® isolating transducer IM33-22-HI/24VDC is designed to operate intrinsically safe HART® transducers. Besides the analog signals, digital HART® communication signals can also be transmitted bidirectionally.

Alternatively, active 2-wire HART® transmitters (II) and passive 3-wire HART® transmitters (I) can be operated.

The device features 0/4…20 mA input and output circuits. A green LED indicates operational readiness.

The input signals are transmitted 1:1 and are presented to the relevant outputs in the non-Ex area.

Due to the 1:1 transmission characteristic, wire-break or short-circuit of in the measuring transducer circuit are indicated as currents of 0 mA resp. > 22.5 mA.

The removable terminal blocks feature test sockets (Ø 2 mm) for connection of a HART® handheld.

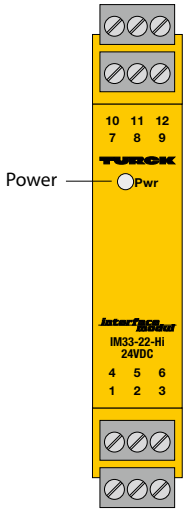

Technical data

Type	IM33-22-HI/24VDC
Ident no.	7506564
Power supply	
Nominal voltage	24 VDC
Operating voltage range	19…29 VDC
Power consumption	≤ 3.2 W
Inputs	
Supply voltage	≥ 17 V / 20 mA
Current input	0/4…20 mA
Input resistance (current)	≤ 250 Ω
Outputs	
Load resistance, current output	≤ 0.5 kΩ
Output current	0/4…20 mA
Response characteristic	
Measuring accuracy	≤ 0.1 % of full scale
Reference temperature	23 °C
Temperature drift	≤ 0.005 % / K
Rise time (10-90%)	≤ 50 ms
Dropout time (90…10%)	≤ 50 ms
Approvals and declarations	
Declaration	SIL 2 acc. to EXIDA FMEDA
Indication	
Operational readiness	green
Environmental Conditions	
Ambient temperature	-25…+70 °C
Storage temperature	-40…+80 °C
Relative humidity	≤ 95 %
Test voltage	2.5 kV
MTTF	159 years acc. to SN 29500 (Ed. 99) 40 °C
Mechanical data	
Tightening torque	0.5 Nm
Electrical connection	4 x 3-pin removable terminal blocks with test socket, reverse polarity protected, screw connection
Terminal cross-section	1 x 2.5 mm² / 2 x 1.5 mm²
Housing material	Polycarbonate/ABS
Mounting instruction	for DIN rail / panel
Protection class	IP20
Flammability class acc. to UL 94	V-0
Dimensions	18 x 110 x 110 mm
Approval | Certification	TR CU

HART® isolating transducer, 2-channel

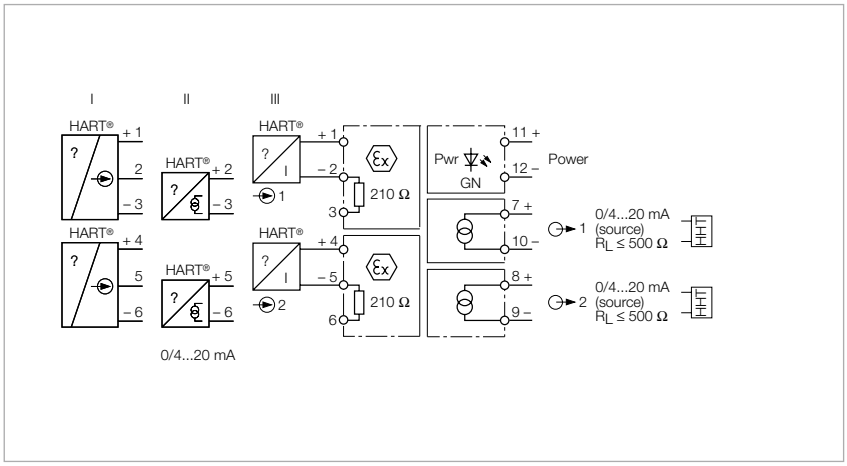

Features

- ATEX, IECEx, UL, $_{C}FM_{US}$, TR CU, TIIS, CCEO
- Installation in zone 2
- Power supply of 2-wire measuring transducers with HART® communication as well as connection to active 2-wire and passive 3-wire transmitters
- Input circuits: 0/4…20 mA
- Output circuits: 0/4…20 mA
- SIL2
- Removable terminal blocks, screwable, with 2 mm test socket
- Complete galvanic isolation

The 2-channel HART® isolating transducer IM33-22EX-HI/24VDC is designed to operate intrinsically safe HART® 2-wire transducers (III) in the Ex area and to transmit the measured signals to the non-Ex area. Besides the analog signals, digital HART® communication signals can also be transmitted bidirectionally.

Alternatively, active 2-wire HART® transmitters (II) and passive 3-wire HART® transmitters (I) can be operated.

The device features 0/4…20 mA input and output circuits. A green LED indicates operational readiness.

The input signals are transmitted 1:1 and are presented to the relevant outputs in the non-Ex area.

Due to the 1:1 transmission characteristic, wire-break or short-circuit of in the measuring transducer circuit are indicated as currents of 0 mA resp. > 22.5 mA.

The removable cage clamp terminals feature test sockets (Ø 2 mm) for connection of a HART® handheld.

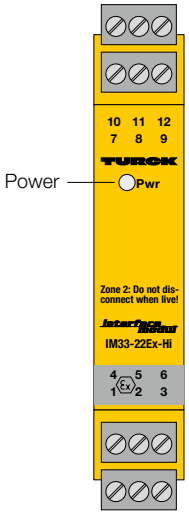

Technical data

Type	IM33-22EX-HI/24VDC
Ident no.	7506441

Power supply

Nominal voltage	24 VDC
Operating voltage range	19…29 VDC
Power consumption	≤ 3.2 W

Inputs

Supply voltage	≥ 17 V / 20 mA
Current input	0/4…20 mA
Input resistance (current)	≤ 250 Ω

Outputs

Load resistance, current output	≤ 0.5 kΩ
Output current	0/4…20 mA
Internal resistance R_i	317 Ω

Response characteristic

Measuring accuracy	≤ 0.1 % of full scale
Reference temperature	23 °C
Temperature drift	≤ 0.005 % / K
Rise time (10-90%)	≤ 50 ms
Dropout time (90…10%)	≤ 50 ms

Approvals and declarations

Ex approval acc. to conformity certificate	TÜV 00 ATEX 1595
Device designation	Ⓔx II (1) G, II (1) D [Ex ia Ga] IIC; [Ex ia Da] IIIC
Max. values:	Terminal connection: 1…3 / 4…6
Max. output voltage U_o	≤ 21.9 V
Max. output current I_o	≤ 95 mA
Max. output power P_o	≤ 747 mW
Rated voltage	250 V
Characteristic	Trapezoidal
Max. input voltage U_i	≤ 30 V
Max. input power P_i	≤ 650 mW

External inductance/capacitance L_o/C_o

Ex ia	IIC	IIB
L_o [mH]	2.8	11
C_o [µF]	0.057	0.370

Ex approval acc. to conformity certificate	TÜV 06 ATEX 552977 X
Application area	II 3 G
Protection type	Ex nA [ic Gc] IIC T4 Gc
Max. values:	Terminal connection: 1…3 / 4…6
Max.output voltage U_o	≤ 21.9 V
Max. output current I_o	≤ 95 mA
Characteristic	trapezoidal
Max. input voltage U_i	≤ 30 V
Max. input power P_i	≤ 650 mW

External inductance/capacitance L_o/C_o

Ex ic	IIC	IIB
L_o [mH]	3	10.0
C_o [µF]	0.12	0.81

Internal resistance R_i	331 Ω
Declaration	SIL 2 acc. to EXIDA FMEDA

Indication

Operational readiness	green

Environmental Conditions

Ambient temperature	-25…+70 °C
Storage temperature	-40…+80 °C
Relative humidity	≤ 95 %
Test voltage	2.5 kV
MTTF	159 years acc. to SN 29500 (Ed. 99) 40 °C

Mechanical data

Tightening torque	0.5 Nm
Electrical connection	4 x 3-pin removable terminal blocks with test socket, reverse polarity protected, screw connection
Terminal cross-section	1 x 2.5 mm² / 2 x 1.5 mm²
Housing material	Polycarbonate/ABS
Mounting instruction	for DIN rail / panel
Protection class	IP20
Flammability class acc. to UL 94	V-0
Dimensions	18 x 110 x 110 mm

Approval | Certification	ATEX, IECEx, UL, cFM$_{us}$, TR CU, TIIS, CCOE

HART® isolating transducer, 2-channel

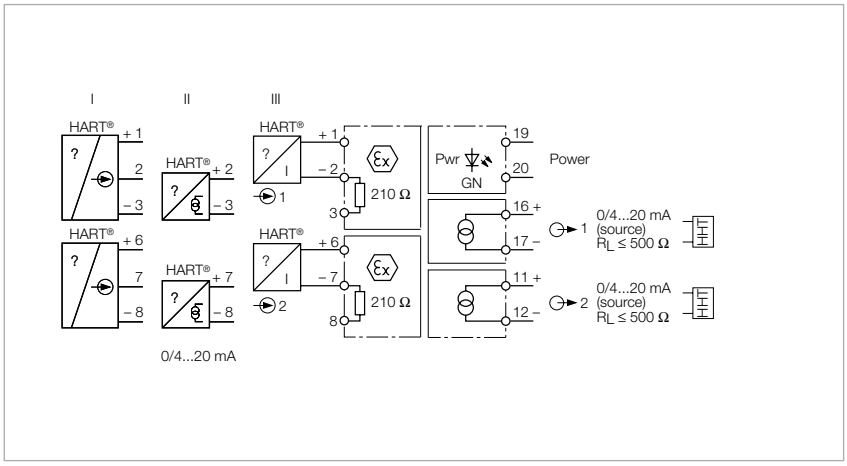

Features

- ATEX, IECEx, $_{C}FM_{US}$, TR CU, INMETRO
- Installation in zone 2
- Power supply of 2-wire measuring transducers with HART® communication as well as connection to active 2-wire and passive 3-wire transmitters
- Input circuits: 0/4…20 mA
- Output circuits: 0/4…20 mA
- Complete galvanic isolation

The 2-channel HART® isolating transducer IM33-22EX-HI is designed to operate intrinsically safe HART® 2-wire transducers (III) in the Ex area and to transmit the measured signals to the non-Ex area. Besides the analog signals, digital HART® communication signals can also be transmitted bidirectionally.

Alternatively, active 2-wire HART® transmitters (II) and passive 3-wire HART® transmitters (I) can be operated.

The device features 0/4…20 mA input and output circuits. A green LED indicates operational readiness.

The input signals are transmitted 1:1 and are presented to the relevant outputs in the non-Ex area.

Due to the 1:1 transmission characteristic, wire-break or short-circuit of in the measuring transducer circuit are indicated as currents of 0 mA resp. > 22.5 mA.

The removable cage clamp terminals feature test sockets (Ø 2 mm) for connection of a HART® handheld.

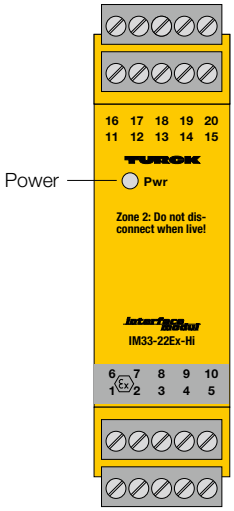

Technical data

Type	IM33-22EX-HI
Ident no.	7506445

Power supply	
Nominal voltage	Universal voltage supply unit
Operating voltage range	20…125 VDC
Operating voltage range	20…250 VAC
Frequency	40…70 Hz
Power consumption	≤ 3 W

Inputs	
Supply voltage	≥ 17 V / 20 mA
Current	25 mA
Current input	0/4…20 mA
Input resistance (current)	≤ 250 Ω

Outputs	
Load resistance, current output	≤ 0.5 kΩ
Output current	0/4…20 mA

Response characteristic	
Measuring accuracy	≤ 0.1 % of full scale
Reference temperature	23 °C
Temperature drift	≤ 0.005 % / K
Rise time (10-90%)	≤ 50 ms
Dropout time (90…10%)	≤ 50 ms

Approvals and declarations	
Ex approval acc. to conformity certificate	TÜV 05 ATEX 2910
Device designation	Ⓔx II (1) G; II (1) D [Ex ia Ga] IIC; [Ex ia Da] IIIC
Max. values:	Terminal connection: 1…3 / 6…8
Max. output voltage U_o	≤ 21.3 V
Max. output current I_o	≤ 86 mA
Max. output power P_o	≤ 675 mW
Internal resistance R_i	365 Ω
Rated voltage	250 V
Characteristic	Trapezoidal

External inductance/capacitance L_o/C_o

Ex ia	IIC	IIB
L_o [mH]	0.47	10
C_o [µF]	0.093	0.45

Ex approval acc. to conformity certificate	TÜV 06 ATEX 2967 X
Application area	II 3 G
Protection type	Ex nA [ic Gc] IIC T4 Gc
Max. values:	Terminal connection: 1…3 / 6…8
Max.output voltage U_o	≤ 21.3 V
Max. output current I_o	≤ 86 mA
Max. output power P_o	≤ 675 mW
Characteristic	trapezoidal
Internal inductance/capacitance L_i/C_i	L_i = 75 µH, C_i negligibly small

External inductance/capacitance L_o/C_o

	Ex nL IIC	Ex nL IIB
L_o [mH]	4.5	10
C_o [nF]	157	890

Internal resistance R_i	365 Ω

Indication	
Operational readiness	green

Environmental Conditions	
Ambient temperature	-25…+70 °C
Storage temperature	-40…+80 °C
Test voltage	2.5 kV

Mechanical data	
Tightening torque	0.5 Nm
Electrical connection	4 x 5-pin removable terminal blocks with test socket, reverse polarity protected, screw connection
Terminal cross-section	1 x 2.5 mm² / 2 x 1.5 mm²
Housing material	Polycarbonate/ABS
Mounting instruction	for DIN rail / panel
Protection class	IP20
Flammability class acc. to UL 94	V-0
Dimensions	27 x 110 x 110 mm

Approval | Certification	ATEX, IECEx, cFM$_{us}$, TR CU, INMETRO

Temperature measuring amplifier, 1-channel

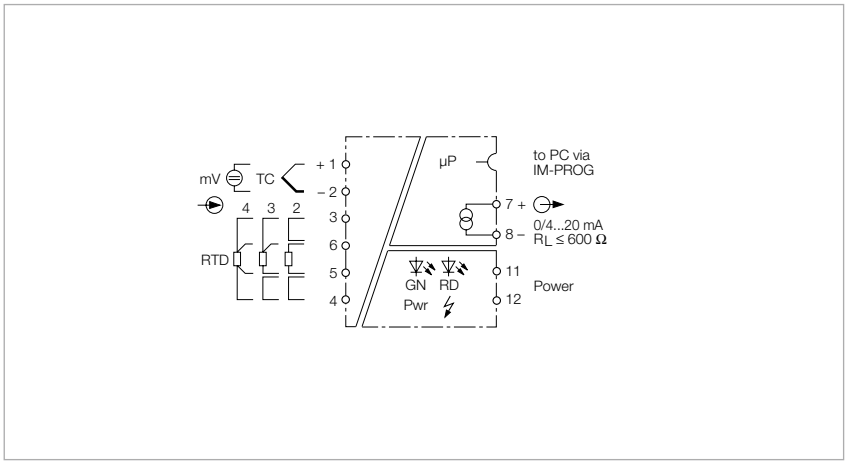

Features

- TR CU
- Input for Pt100/ Ni100 resistors, thermocouples and millivolt signals in 2, 3 or 4-wire technology
- Output circuit: 0/4…20 mA
- Parametrized via PC (FDT / DTM)
- Complete galvanic isolation

The 1-channel temperature measuring amplifier IM34-11-CI is designed to evaluate the temperature-dependent changes of Ni100/Pt100 RTDs, thermocouples types B, E, J, K, L, N, R, S and T or low voltages in a range of -160…+160 mV and to output them as linear temperature current signals.

Alternatively, Ni100/Pt100 in 2, 3 or 4-wire-technology can be operated at the measuring amplifier's input circuit. The Ni100/Pt100 input can either be used as external cold junction compensation for the thermocouple or as independent measuring input.

The device can be configured via PC with the software tool Device Type Manager (DTM); the appropriate transmission cable IM-PROG III is available from TURCK.

The following settings are available:
- Connection mode (2, 3 and 4-wire technology)
- Measuring range start
- Measuring range end
- Input circuit monitoring for wire-break
- Current output behaviour in the event of input circuit errors: 0 or > 22 mA
- Internal or external cold junction compensation
- Output current (0/4…20 mA)
- Temperature (°C or °K)
- Mode (resistor, thermocouples, low voltage, line compensation)

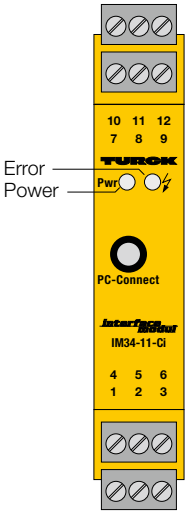

Technical data

Type	IM34-11-CI
Ident no.	7506638

Power supply	
Nominal voltage	Universal voltage supply unit
Operating voltage range	20…125 VDC
Operating voltage range	20…250 VAC
Frequency	40…70 Hz
Power consumption	≤ 3 W

Inputs	
Input circuits	thermocouple, Ni100, Pt100, mV signals
Pt100	(IEC 751), 2, 3 and 4-wire technology
Ni100	(DIN 43760), 2, 3 and 4-wire technology
Probe current	≤ 0.2 mA
Thermocouples	B, E, J, K, N, R, S, T (ITS 90/IEC 584), L (DIN 43710)
Voltage input	-0.160…+0.160 VDC

Outputs	
Load resistance, current output	≤ 0.6 kΩ
Output current	0/4…20 mA
Fault current	0 / 22 mA adjustable

Response characteristic	
Reference temperature	23 °C
Accuracy current output	± 5 µA
Temperature drift analogue output	0.0025 %/K
Temperature drift RTD input	± 3 mΩ/K
Temperature drift TC input	3.2 µV / K (of 320 mV)
Accuracy RTD input	± 50 mΩ
Accuracy TC input	± 15 µV
Cold junction compensation error	2-wire < 100 mΩ after line compensation 3-wire < 100 mΩ with asymmetrical wiring 4-wire < 50 mΩ with cold junction compensation< 2 K with IM-3-CJT < 1 K
Rise time (10-90 %)	≤ 1000 ms
Dropout time (90…10 %)	≤ 1000 ms

Indication	
Operational readiness	green
Error indication	red

Environmental Conditions	
Ambient temperature	-25…+70 °C
Storage temperature	-40…+80 °C
Test voltage	2.5 kV

Mechanical data	
Tightening torque	0.5 Nm
Electrical connection	4 x 3-pin removable terminal blocks, reverse polarity protected, screw connection
Terminal cross-section	1 x 2.5 mm² / 2 x 1.5 mm²
Housing material	Polycarbonate/ABS
Mounting instruction	for DIN rail / panel
Protection class	IP20
Flammability class acc. to UL 94	V-0
Dimensions	18 x 104 x 110 mm

Approval | Certification	TR CU

Temperature measuring amplifier, 1-channel

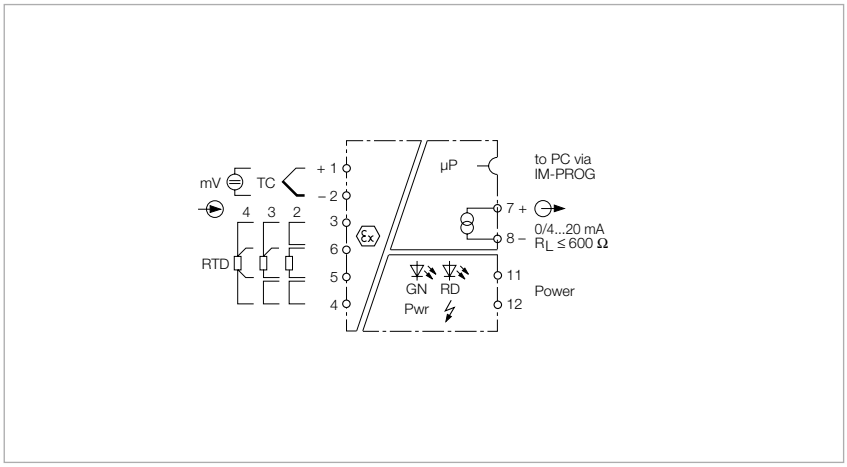

Features

- ATEX, IECEx, $_{C}FM_{US}$, UL, TR CU, INMETRO, CCOE
- Installation in zone 2
- Input for Pt100/ Ni100 resistors, thermocouples and millivolt signals in 2, 3 or 4-wire technology
- Output circuit: 0/4…20 mA
- Parametrized via PC (FDT / DTM)
- Complete galvanic isolation

The 1-channel Ex-area temperature measuring amplifier IM34-11EX-CI is designed to evaluate the temperature-dependent changes of Ni100/Pt100 RTDs, thermocouples types B, E, J, K, L, N, R, S and T or low voltages in a range of -160… +160 mV and to output them as temperature-linear current signals 0/4…20 mA.

Alternatively, Ni100/Pt100 in 2, 3 or 4-wire-technology can be operated at the measuring amplifier's input circuit. The Ni100/Pt100 input can either be used as external cold junction compensation for the thermocouple or as independent measuring input.

The device can be configured via PC with the software tool Device Type Manager (DTM); the appropriate transmission cable IM-PROG III is available from TURCK.

The following settings are available:
- Connection mode (2, 3 and 4-wire technology)
- Measuring range start
- Measuring range end
- Input circuit monitoring for wire-break
- Current output behaviour in the event of input circuit errors: 0 or > 22 mA
- Internal or external cold junction compensation
- Output current (0/4…20 mA)
- Temperature (°C or °K)
- Mode (resistor, thermocouples, low voltage, line compensation)

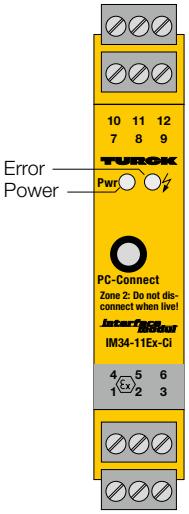

Technical data

Type	IM34-11EX-CI
Ident no.	7506633

Power supply	
Operating voltage range	20…125 VDC
Operating voltage range	20…250 VAC
Frequency	40…70 Hz
Power consumption	≤ 3 W

Inputs	
Input circuits	intrinsically safe acc. to EN 60079, thermocouple, Pt100, Ni100, mV signals
Pt100	(IEC 751), 2, 3 and 4-wire technology
Ni100	(DIN 43760), 2, 3 and 4-wire technology
Probe current	≤ 0.2 mA
Thermocouples	B, E, J, K, N, R, S, T (ITS 90/IEC 584), L (DIN 43710)
Voltage input	-0.160…+0.160 VDC

Outputs	
Load resistance, current output	≤ 0.6 kΩ
Output current	0/4…20 mA
Fault current	0 / 22 mA adjustable
Output	adjustable output mode

Response characteristic	
Reference temperature	23 °C
Accuracy current output	± 5 µA
Temperature drift analogue output	0.0025 %/K
Temperature drift RTD input	± 3 mΩ/K
Temperature drift TC input	3.2 µV / K (of 320 mV)
Accuracy RTD input	± 50 mΩ
Accuracy TC input	± 15 µV
Cold junction compensation error	2-wire < 100 mΩ after line compensation 3-wire < 100 mΩ with asymmetrical wiring 4-wire < 50 mΩ with cold junction compensation< 2 K with IM-3-CJT < 1 K
Rise time (10-90%)	≤ 1000 ms
Dropout time (90…10%)	≤ 1000 ms

Approvals and declarations	
Ex approval acc. to conformity certificate	TÜV 02 ATEX 1898
Device designation	Ⓔx II (1) G, II (1) D [Ex ia Ga] IIC ; [Ex ia Da] IIIC ;
Max. values:	Terminal connection: 1…6
Max. output voltage U_o	≤ 5 V
Max. output current I_o	≤ 2.5 mA
Max. output power P_o	≤ 3 mW
Rated voltage	250 V
Characteristic	linear
Internal inductance/capacitance L_i/C_i	negligibly small

External inductance/capacitance L_o/C_o

Ex ia	IIC	IIB
L_o [mH]	100	100
C_o [µF]	2	9.1

Ex approval acc. to conformity certificate	TÜV 06 ATEX 552978 X
Application area	II 3 G
Protection type	Ex nA [ic Gc] IIC T4
Max. values:	Terminal connection: 1…6
Max.output voltage U_o	≤ 5 V
Max. output current I_o	≤ 2.5 mA
Max. output power P_o	≤ 3 mW
Characteristic	linear
Internal inductance/capacitance L_i/C_i	negligibly small

External inductance/capacitance L_o/C_o

Ex ic	IIC	IIB
L_o [mH]	100	100
C_o [µF]	3.6	18

Indication	
Operational readiness	green
Error indication	red

Environmental Conditions	
Ambient temperature	-25…+70 °C
Storage temperature	-40…+80 °C
Test voltage	2.5 kV

Mechanical data	
Tightening torque	0.5 Nm
Electrical connection	4 x 3-pin removable terminal blocks, reverse polarity protected, screw connection
Terminal cross-section	1 x 2.5 mm² / 2 x 1.5 mm²
Housing material	Polycarbonate/ABS
Mounting instruction	for DIN rail / panel
Protection class	IP20
Flammability class acc. to UL 94	V-0
Dimensions	18 x 104 x 110 mm

Approval | Certification	ATEX, IECEx, UL, $_cFM_{us}$, TR CU, INMETRO, CCOE

Temperature measuring amplifier, 1-channel

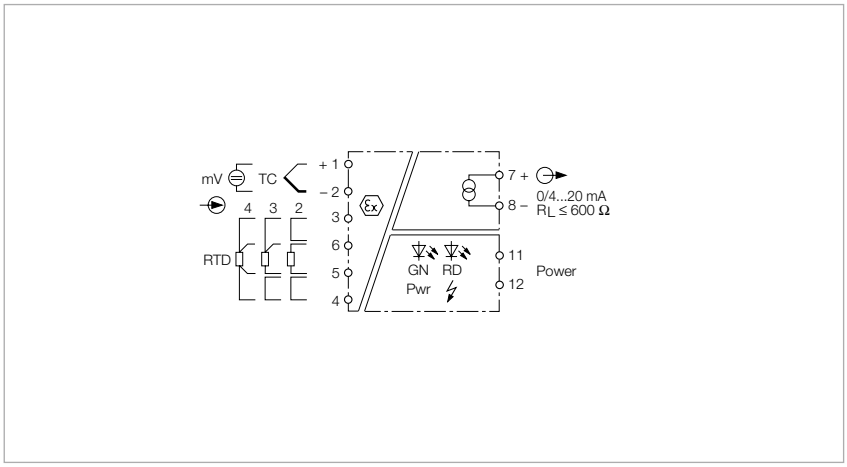

Features

- ATEX, IECEx, $_{C}FM_{US}$, UL, TR CU, INMETRO, CCOE
- Installation in zone 2
- Input for Pt100/ Ni100 resistors, thermocouples and millivolt signals in 2, 3 or 4-wire technology
- Output circuit: 0/4…20 mA
- Upper and lower limit adjustable via rotary coding switch
- Complete galvanic isolation

The 1-channel Ex-area temperature measuring amplifier IM34-11EX-I is designed to evaluate the temperature-dependent changes of Ni100/Pt100 RTDs, thermocouples types B, E, J, K, L, N, R, S and T or low voltages in a range of -100… +160 mV and to output them as temperature-linear current signals 0/4…20 mA.

Alternatively, Ni100/Pt100 RTDs in 2, 3 or 4-wire technology can also be operated at the input circuit of the measuring amplifier. The Ni100/Pt100 input can either be used as external cold junction compensation for the thermocouple or as independent measuring input.

The measuring range and the device functions are set via coded rotary switches or slide switches (located on the right side of the device).

The following settings are available:
- Type of probe
- Connection of the Ni100/Pt100 resistor in 2, 3 or 4-wire technology
- Measuring range, lower limit -100…- 1 °C in 1-K steps, 0…990 °C in 10-K steps
- Measuring range upper limit 0…1990 °C in 10-K steps
- Input circuit monitoring for wire-break
- Current output behaviour in the event of input circuit errors: 0 or > 22 mA
- Internal or external cold junction compensation

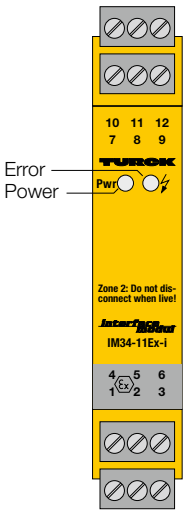

Technical data

Type	IM34-11EX-I
Ident no.	7506630

Power supply

Operating voltage range	20…125 VDC
Operating voltage range	20…250 VAC
Frequency	40…70 Hz
Power consumption	≤ 3 W

Inputs

Input circuits	intrinsically safe acc. to EN 60079, thermocouple, Ni100, Pt100, mV signals
Pt100	(IEC 751), 2, 3 and 4-wire technology
Ni100	(DIN 43760), 2, 3 and 4-wire technology
Probe current	≤ 0.2 mA
Thermocouples	B, E, J, K, N, R, S, T (ITS 90/IEC 584), L (DIN 43710)
Voltage input	-0.160…+0.160 VDC

Outputs

Load resistance, current output	≤ 0.6 kΩ
Output current	0/4…20 mA
Fault current	0 / 22 mA adjustable
Output	adjustable output mode

Response characteristic

Reference temperature	23 °C
Accuracy current output	± 5 µA
Temperature drift analogue output	0.0025 %/K
Temperature drift RTD input	± 3 mΩ/K
Temperature drift TC input	3.2 µV / K (of 320 mV)
Accuracy RTD input	± 50 mΩ
Accuracy TC input	± 15 µV
Cold junction compensation error	2-wire < 100 mΩ after line compensation 3-wire < 100 mΩ with asymmetrical wiring 4-wire < 50 mΩ with cold junction compensation< 2 K with IM-3-CJT < 1 K
Rise time (10-90%)	≤ 1000 ms
Dropout time (90…10%)	≤ 1000 ms

Approvals and declarations

Ex approval acc. to conformity certificate	TÜV 02 ATEX 1898
Device designation	Ⓔx II (1) G, II (1) D [Ex ia Ga] IIC ; [Ex ia Da] IIIC ;
Max. values:	Terminal connection: 1…6
Max. output voltage U_o	≤ 5 V
Max. output current I_o	≤ 2.5 mA
Max. output power P_o	≤ 3 mW
Rated voltage	250 V
Characteristic	linear
Internal inductance/capacitance L_i/C_i	negligibly small

External inductance/capacitance L_o/C_o

Ex ia	IIC	IIB
L_o [mH]	100	100
C_o [µF]	2	9.1

Ex approval acc. to conformity certificate	TÜV 06 ATEX 552978 X
Application area	II 3 G
Protection type	Ex nA [ic Gc] IIC T4
Max. values:	Terminal connection: 1…6
Max.output voltage U_o	≤ 5 V
Max. output current I_o	≤ 2.5 mA
Max. output power P_o	≤ 3 mW
Characteristic	linear
Internal inductance/capacitance L_i/C_i	negligibly small

External inductance/capacitance L_o/C_o

Ex ic	IIC	IIB
L_o [mH]	100	100
C_o [µF]	3.6	18

Indication

Operational readiness	green
Error indication	red

Environmental Conditions

Ambient temperature	-25…+70 °C
Storage temperature	-40…+80 °C
Test voltage	2.5 kV

Mechanical data

Tightening torque	0.5 Nm
Electrical connection	4 x 3-pin removable terminal blocks, reverse polarity protected, screw connection
Terminal cross-section	1 x 2.5 mm² / 2 x 1.5 mm²
Housing material	Polycarbonate/ABS
Mounting instruction	for DIN rail / panel
Protection class	IP20
Flammability class acc. to UL 94	V-0
Dimensions	18 x 104 x 110 mm

Approval | Certification	ATEX, IECEx, UL, $_cFM_{us}$, TR CU, INMETRO, CCOE

Temperature measuring amplifier, 1-channel

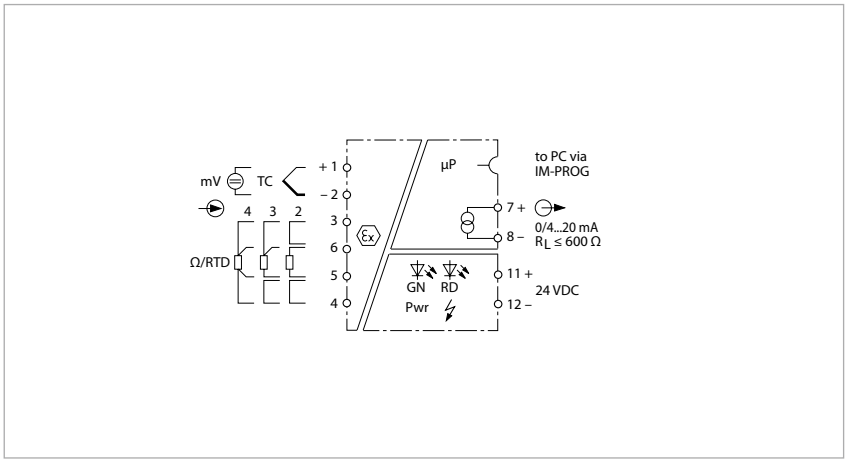

Features

- ATEX, IECEx, TR CU, INMETRO, CCOE
- Installation in zone 2
- Input for Pt100/ Ni100 resistors, thermocouples and millivolt signals in 2, 3 or 4-wire technology
- Parametrization via PACT*ware*™
- Output: 0/4…20 mA
- Complete galvanic isolation

The temperature measuring amplifier IM34-11Ex-C_i/24VDC is designed to evaluate the temperature-dependent changes of Ni100/Pt100 RTDs, thermocouples types B, E, J, K, L, N, R, S and T or low voltages in a range of -160…+160 mV and to output them as temperature-linear current signals.

Alternatively, Ni100/Pt100 in 2, 3 or 4-wire-technology can be operated at the measuring amplifier's input circuit. The Ni100/Pt100 input can either be used as external cold junction compensation for the thermocouple or as independent measuring input.

The device can be configured and parametrized via PC (FDT/DTM); the appropriate TURCK-PROG III transmission cable is available from TURCK.

The following settings can be adjusted via DTM:

- Connection mode (2, 3 and 4-wire technology)
- Measuring range start
- Measuring range end
- Input circuit monitoring for wire-break
- Current output behaviour in the event of input circuit errors: 0 or > 22 mA
- Internal, external or constant cold junction compensation
- Output current (0/4…20 mA)
- Temperature (°C or °K)
- Mode (resistor, thermocouples, low voltage, line compensation)

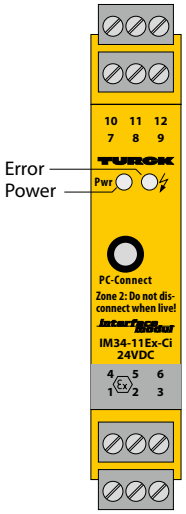

Technical data

Type	IM34-11Ex-CI/24VDC
Ident no.	7506637

Power supply

Nominal voltage	24 VDC
Operating voltage range	20…30 VDC
Power consumption	≤ 1.5 W

Inputs

Input circuits	intrinsically safe acc. to EN 60079, thermocouple, Ni100, Pt100, mV signals
RTD	Pt100 (IEC 751), NI100 (DIN 43760), 2- und 3-Leiter-Technik, nach Gost: Pt100, Cu50, Cu53, Cu100, CuZn100
Ni100	(DIN 43760), 2, 3 and 4-wire technology
Probe current	≤ 0.2 mA
Thermocouples	B, E, J, K, N, R, S, T (ITS 90/IEC 584), L (DIN 43710), acc. to Gost: L, M, A1, A2, A3
Voltage input	-0.160…+0.160 VDC

Outputs

Load resistance, current output	≤ 0.6 kΩ
Output current	0/4…20 mA
Fault current	0 / 22 mA adjustable
Output	adjustable output mode

Response characteristic

Reference temperature	23 °C
Accuracy current output	± 20 µA
Temperature drift analogue output	0.0025 %/K
Temperature drift RTD input	± 3 mΩ/K
Temperature drift TC input	3.2 µV / K (of 320 mV)
Accuracy RTD input	± 50 mΩ
Accuracy TC input	± 15 µV
Cold junction compensation error	2-wire < 100 mΩ after line compensation 3-wire < 100 mΩ with asymmetrical wiring 4-wire < 50 mΩ with cold junction compensation< 2 K with IM-3-CJT < 1 K
Rise time (10-90%)	≤ 1000 ms
Dropout time (90…10%)	≤ 1000 ms

Approvals and declarations

Ex approval acc. to conformity certificate	TÜV 02 ATEX 1898
Device designation	⟨Ex⟩ II (1) G, II (1) D [Ex ia Ga] IIC ; [Ex ia Da] IIIC ;
Max. values:	Terminal connection: 1…6
Max. output voltage U_o	≤ 5 V
Max. output current I_o	≤ 2.5 mA
Max. output power P_o	≤ 3 mW
Rated voltage	250 V
Characteristic	linear
Internal inductance/capacitance L_i/C_i	negligibly small

External inductance/capacitance L_o/C_o

Ex ia	IIC	IIB
L_o [mH]	100	100
C_o [µF]	2	9.1

Ex approval acc. to conformity certificate	TÜV 06 ATEX 552978 X
Application area	II 3 G
Protection type	Ex nA [ic Gc] IIC T4
Max. values:	Terminal connection: 1…6
Max.output voltage U_o	≤ 5 V
Max. output current I_o	≤ 2.5 mA
Max. output power P_o	≤ 3 mW
Characteristic	linear
Internal inductance/capacitance L_i/C_i	negligibly small

External inductance/capacitance L_o/C_o

Ex ic	IIC	IIB
L_o [mH]	100	100
C_o [µF]	3.6	18

Indication

Operational readiness	green
Error indication	red

Environmental Conditions

Ambient temperature	-25…+70 °C
Storage temperature	-40…+80 °C
Test voltage	2.5 kV

Mechanical data

Tightening torque	0.5 Nm
Electrical connection	4 x 3-pin removable terminal blocks, reverse polarity protected, screw connection
Terminal cross-section	1 x 2.5 mm² / 2 x 1.5 mm²
Housing material	Polycarbonate/ABS
Mounting instruction	for DIN rail / panel
Protection class	IP20
Flammability class acc. to UL 94	V-0
Dimensions	18 x 104 x 110 mm

Approval | Certification	ATEX, IECEx, TR CU, INMETRO, CCOE

Temperature measuring amplifier, 1-channel

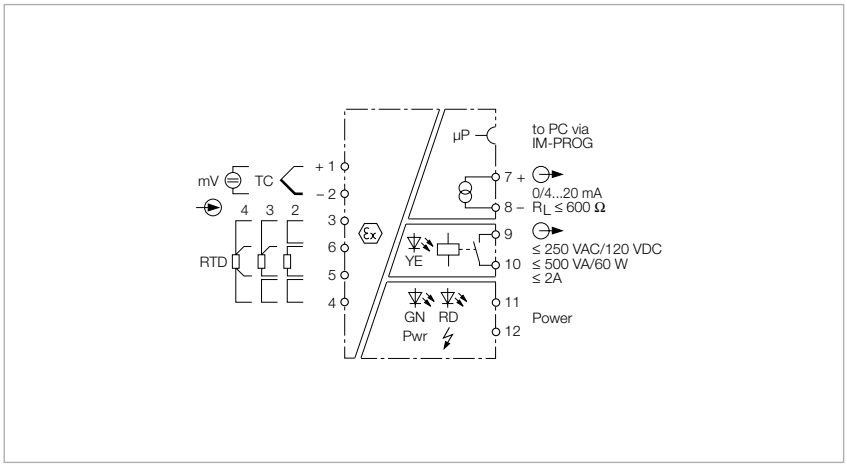

Features

- ATEX, IECEx, $_{C}FM_{US}$, UL, TR CU, INMETRO, CCOE
- Installation in zone 2
- Input for Pt100/ Ni100 resistors, thermocouples and millivolt signals in 2, 3 or 4-wire technology
- Output circuit: 0/4…20 mA, limit value relay
- Parametrized via PC (FDT / DTM)
- Complete galvanic isolation

The 1-channel Ex-area temperature measuring amplifier IM34-12EX-CRI is designed to evaluate the temperature-dependent changes of Ni100/Pt100 RTDs, thermocouples types B, E, J, K, L, N, R, S and T or low voltages in a range of -160…+160 mV and to output them as temperature-linear current signals 0/4…20 mA.

Alternatively, Ni100/Pt100 RTDs in 2, 3 or 4-wire technology can also be operated at the input circuit of the measuring amplifier. The Ni100/Pt100 input can either be used as external cold junction compensation for the thermocouple or as independent measuring input.
The device has an additional relay output to monitor over or underrange of a limit value.

The device can be configured and parametrized via PC (FDT/DTM); the appropriate TURCK-PROG III transmission cable is available from TURCK.

The following settings are available:
- Connection mode (2, 3 and 4-wire technology)
- Measuring range start
- Measuring range end
- Limit value
- Input circuit monitoring for wire-break
- Current output behaviour in the event of input circuit errors: 0 or > 22 mA
- Internal or external cold junction compensation
- Output current (0/4…20 mA)
- Temperature (°C or °K)
- Mode (resistor, thermocouples, low voltage, line compensation)

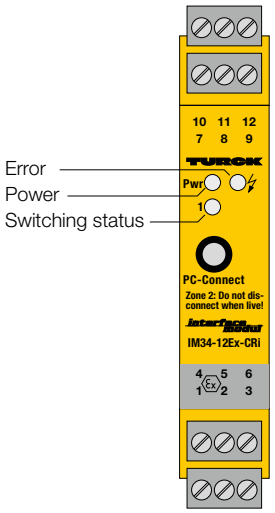

Output relay – Load curve

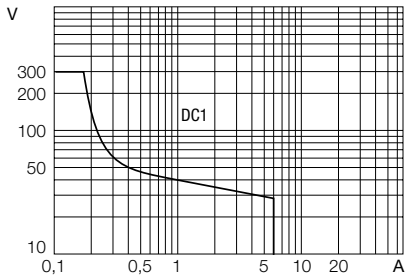

Output relay – Electrical lifetime

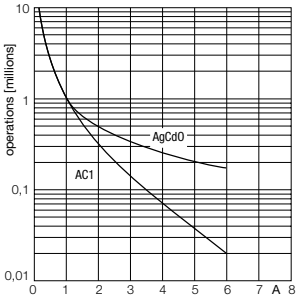

Hans Turck GmbH & Co. KG ▪ Tel. +49 208 49 52-0 ▪ Fax +49 208 49 52-264

Technical data

Type	IM34-12EX-CRI
Ident no.	7506632

Power supply

Operating voltage range	20…125 VDC
Operating voltage range	20…250 VAC
Frequency	40…70 Hz
Power consumption	≤ 3 W

Inputs

Input circuits	intrinsically safe acc. to EN 60079, thermocouple, Pt100, Ni100, mV signals
Pt100	(IEC 751), 2, 3 and 4-wire technology
Ni100	(DIN 43760), 2, 3 and 4-wire technology
Probe current	≤ 0.2 mA
Thermocouples	B, E, J, K, N, R, S, T (ITS 90/IEC 584), L (DIN 43710)
Voltage input	-0.160…+0.160 VDC

Outputs

Load resistance, current output	≤ 0.6 kΩ
Output current	0/4…20 mA
Output circuits (digital)	1 x relays (NO)
Switching frequency	≤ 10 Hz
Relay switching voltage	≤ 250 VAC/120 VDC
Switching current per output	≤ 2 A
Switching capacity per output	≤ 500 VA/60 W
Fault current	0 / 22 mA adjustable
Contact quality	AgNi, 3µ Au
Output	adjustable output mode

Response characteristic

Reference temperature	23 °C
Accuracy current output	± 5 µA
Temperature drift analogue output	0.0025 %/K
Temperature drift RTD input	± 3 mΩ/K
Temperature drift TC input	3.2 µV / K (of 320 mV)
Accuracy RTD input	± 50 mΩ
Accuracy TC input	± 15 µV
Cold junction compensation error	2-wire < 100 mΩ after line compensation 3-wire < 100 mΩ with asymmetrical wiring 4-wire < 50 mΩ with cold junction compensation< 2 K with IM-3-CJT < 1 K
Rise time (10-90%)	≤ 1000 ms
Dropout time (90…10%)	≤ 1000 ms

Approvals and declarations

Ex approval acc. to conformity certificate	TÜV 02 ATEX 1898
Device designation	Ⓔx II (1) G, II (1) D [Ex ia Ga] IIC ; [Ex ia Da] IIIC ;
Max. values:	Terminal connection: 1…6
Max. output voltage U_o	≤ 5 V
Max. output current I_o	≤ 2.5 mA
Max. output power P_o	≤ 3 mW
Rated voltage	250 V
Characteristic	linear
Internal inductance/capacitance L_i/C_i	negligibly small

External inductance/capacitance L_o/C_o

Ex ia	IIC	IIB
L_o [mH]	100	100
C_o [µF]	2	9.1

Ex approval acc. to conformity certificate	TÜV 06 ATEX 552978 X
Application area	II 3 G
Protection type	Ex nA nC [ic Gc] IIC T4
Max. values:	Terminal connection: 1…6
Max.output voltage U_o	≤ 5 V
Max. output current I_o	≤ 2.5 mA
Max. output power P_o	≤ 3 mW
Characteristic	linear
Internal inductance/capacitance L_i/C_i	negligibly small

External inductance/capacitance L_o/C_o

Ex ic	IIC	IIB
L_o [mH]	100	100
C_o [µF]	3.6	18

Indication

Operational readiness	green
Switching state	yellow

Environmental Conditions

Ambient temperature	-25…+70 °C
Storage temperature	-40…+80 °C
Test voltage	2.5 kV

Mechanical data

Tightening torque	0.5 Nm
Electrical connection	4 x 3-pin removable terminal blocks, reverse polarity protected, screw connection
Terminal cross-section	1 x 2.5 mm² / 2 x 1.5 mm²
Housing material	Polycarbonate/ABS
Mounting instruction	for DIN rail / panel
Protection class	IP20
Flammability class acc. to UL 94	V-0
Dimensions	18 x 104 x 110 mm

Approval | Certification	ATEX, IECEx, UL, $_cFM_{us}$, TR CU, INMETRO, CCOE

Temperature measuring amplifier, 1-channel

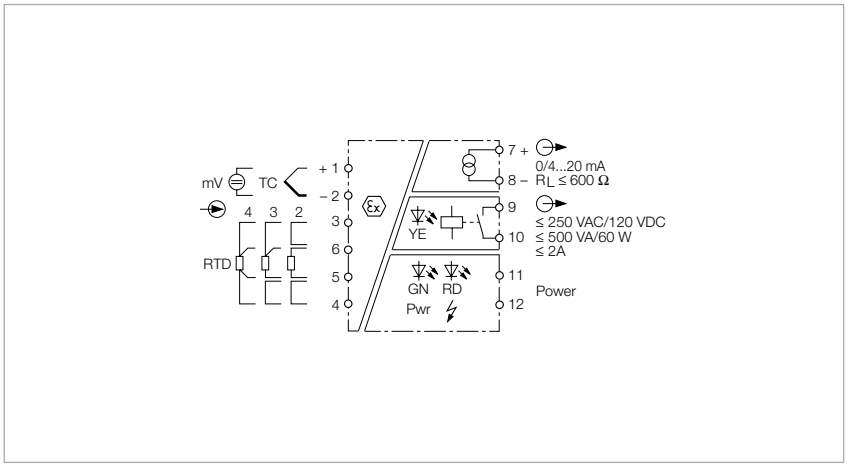

Features

- ATEX, IECEx, $_{C}FM_{US}$, UL, TR CU, INMETRO, CCOE
- Installation in zone 2
- Input for Pt100/ Ni100 resistors, thermocouples and millivolt signals in 2, 3 or 4-wire technology
- Output circuit: 0/4…20 mA, limit value relay
- Upper and lower limit adjustable via rotary coding switch
- Complete galvanic isolation

The 1-channel Ex-area temperature measuring amplifier IM34-12EX-RI is designed to evaluate the temperature-dependent changes of Ni100/Pt100 RTDs, thermocouples types B, E, J, K, L, N, R, S and T or low voltages in a range of -100… +160 mV and to output them as temperature-linear current signals 0/4…20 mA.

Alternatively, Ni100/Pt100 RTDs in 2, 3 or 4-wire technology can also be operated at the input circuit of the measuring amplifier. The Ni100/Pt100 input can either be used as external cold junction compensation for the thermocouple or as independent measuring input.
The device has an additional relay output to monitor over or underrange of a limit value.

The measuring range, limit value and the device functions are set via rotary coding switches or rather slide switches.

The following settings are available:
- Type of probe
- Connection of the Ni100/Pt100 resistor in 2, 3 or 4-wire technology
- Measuring range, lower limit -100… -1 °C in 1-K steps, upper limit 0…990 °C in 10-K steps
- Limit value
- Measuring range upper limit 0…1990 °C in 10-K steps
- Input circuit monitoring for wire-break
- Current output behaviour in the event of input circuit errors: 0 or > 22 mA
- Internal or external cold junction compensation
- Relay output mode

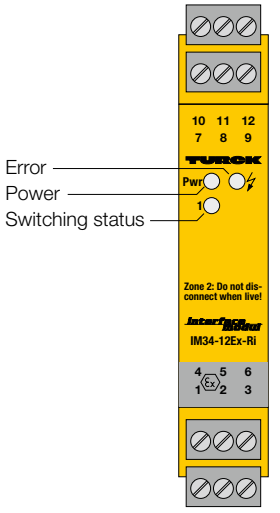

Output relay – Load curve

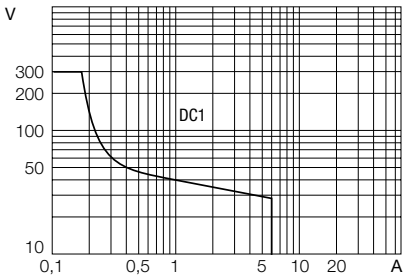

Output relay – Electrical lifetime

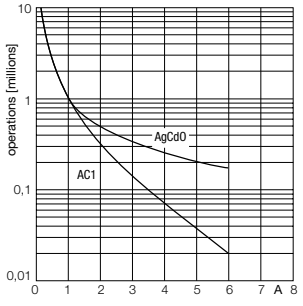

Technical data

Type	IM34-12EX-RI
Ident no.	7506631

Power supply

Nominal voltage	Universal voltage supply unit
Operating voltage range	20…125 VDC
Operating voltage range	20…250 VAC
Frequency	40…70 Hz
Power consumption	≤ 3 W

Inputs

Input circuits	intrinsically safe acc. to EN 60079, thermocouple, Ni100, Pt100, mV signals
Pt100	(IEC 751), 2, 3 and 4-wire technology
Ni100	(DIN 43760), 2, 3 and 4-wire technology
Probe current	≤ 0.2 mA
Thermocouples	B, E, J, K, N, R, S, T (ITS 90/IEC 584), L (DIN 43710)
Voltage input	-0.160…+0.160 VDC

Outputs

Load resistance, current output	≤ 0.6 kΩ
Output current	0/4…20 mA
Output circuits (digital)	1 x relays (NO)
Switching frequency	≤ 10 Hz
Relay switching voltage	≤ 250 VAC/120 VDC
Switching current per output	≤ 2 A
Switching capacity per output	≤ 500 VA/60 W
Fault current	0 / 22 mA adjustable
Contact quality	AgNi, 3µ Au
Output	adjustable output mode

Response characteristic

Reference temperature	23 °C
Accuracy current output	± 5 µA
Temperature drift analogue output	0.0025 %/K
Temperature drift RTD input	± 3 mΩ/K
Temperature drift TC input	3.2 µV / K (of 320 mV)
Accuracy RTD input	± 50 mΩ
Accuracy TC input	± 15 µV
Cold junction compensation error	2-wire < 100 mΩ after line compensation 3-wire < 100 mΩ with asymmetrical wiring 4-wire < 50 mΩ with cold junction compensation< 2 K with IM-3-CJT < 1 K
Rise time (10-90%)	≤ 1000 ms
Dropout time (90…10%)	≤ 1000 ms

Approvals and declarations

Ex approval acc. to conformity certificate	TÜV 02 ATEX 1898
Device designation	Ⓔx II (1) G, II (1) D [Ex ia Ga] IIC ; [Ex ia Da] IIIC ;
Max. values:	Terminal connection: 1…6
Max. output voltage U_o	≤ 5 V
Max. output current I_o	≤ 2.5 mA
Max. output power P_o	≤ 3 mW
Characteristic	linear
Internal inductance/capacitance L_i/C_i	negligibly small

External inductance/capacitance L_o/C_o

Ex ia	IIC	IIB
L_o [mH]	100	100
C_o [µF]	2	9.1

Ex approval acc. to conformity certificate	TÜV 06 ATEX 552978 X
Application area	II 3 G
Protection type	Ex nA nC [ic Gc] IIC T4
Max. values:	Terminal connection: 1…6
Max.output voltage U_o	≤ 5 V
Max. output current I_o	≤ 2.5 mA
Max. output power P_o	≤ 3 mW
Characteristic	linear
Internal inductance/capacitance L_i/C_i	negligibly small

External inductance/capacitance L_o/C_o

Ex ic	IIC	IIB
L_o [mH]	100	100
C_o [µF]	3.6	18

Indication

Switching state	yellow

Environmental Conditions

Ambient temperature	-25…+70 °C
Storage temperature	-40…+80 °C
Test voltage	2.5 kV

Mechanical data

Tightening torque	0.5 Nm
Electrical connection	4 x 3-pin removable terminal blocks, reverse polarity protected, screw connection
Terminal cross-section	1 x 2.5 mm² / 2 x 1.5 mm²
Housing material	Polycarbonate/ABS
Mounting instruction	for DIN rail / panel
Protection class	IP20
Flammability class acc. to UL 94	V-0
Dimensions	18 x 104 x 110 mm

Approval | Certification	ATEX, IECEx, UL, $_cFM_{us}$, TR CU, INMETRO, CCOE

Temperature measuring amplifier, 1-channel

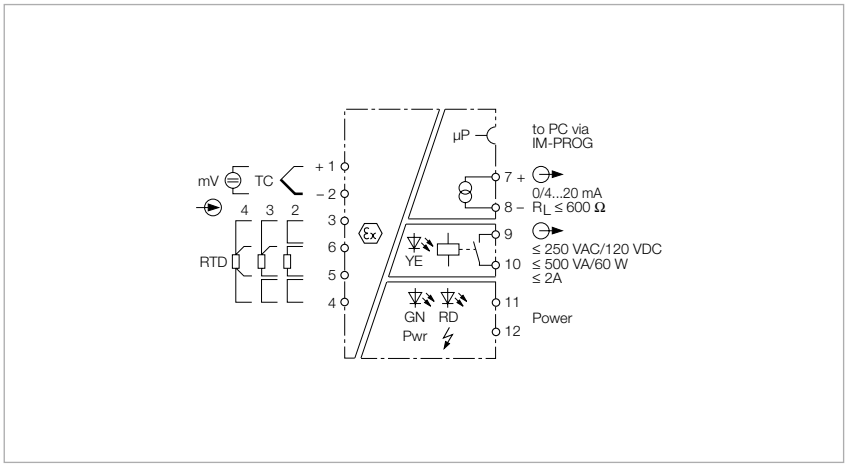

Features

- ATEX, IECEx, $_{C}FM_{US}$, UL, TR CU, INMETRO, CCOE
- Installation in zone 2
- Connection of thermocouples acc. to IEC 751 and GOST
- Connection of thermocouples acc. to IEC 584 and GOST
- Parametrized via FDT / DTM
- Complete galvanic isolation

The temperature measuring amplifier IM34-12EX-CRI/K63 is designed to evaluate the temperature-dependent changes of RTDs, thermocouples or low voltages and to output them as temperature-linear current signals between 0/4…20 mA. The special device K63 analyzes standard Pt100/NI100 RTDs acc. to IEC 751, as well as Pt100 acc. to Gost, also CU50, CU53 CU100 and CuZn100 acc. to Gost.

Moreover, standard thermocouples B, E, J, K, L, N, R, S and T , also the types L, A1, A2, A3 and M acc. to Gost can be connected. The device has an additional relay output to monitor over or underrange of a limit value.

The devices are parametrized and configured via PC with the software tool „Device Type Manager" (DTM). For this, connect the temperature measuring amplifier to the PC with the 3.5 mm jack plug on the front.

The ready-made transmission cable can be ordered from TURCK under the type name IM-PROG (ident no. 6890422).

The following settings can be adjusted via DTM:

- Connection mode (2, 3 and 4-wire technology)
- Measuring range start
- Measuring range end
- Limit value
- Input circuit monitoring for wire-break
- Behaviour of current output in the event of input circuit errors: 0 resp. > 22 mA
- Internal or external cold junction compensation
- Output current (0/4…20 mA)
- Temperature (°C or °K)
- Mode (resistor, thermocouples, low voltage, line compensation)

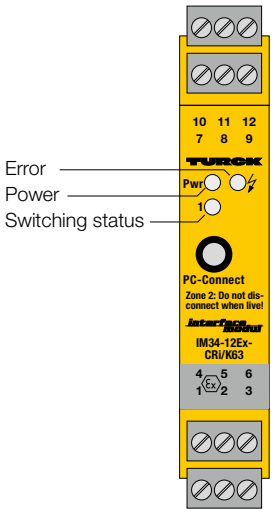

Output relay – Load curve

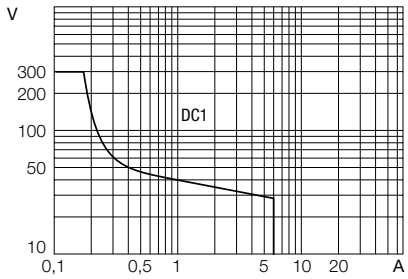

Output relay – Electrical lifetime

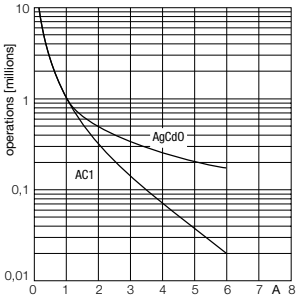

Hans Turck GmbH & Co. KG ▪ Tel. +49 208 49 52-0 ▪ Fax +49 208 49 52-264

Technical data

Type	IM34-12Ex-CRi/K63
Ident no.	7506605

Power supply

Nominal voltage	Universal voltage supply unit
Operating voltage range	20…125 VDC
Operating voltage range	20…250 VAC
Frequency	40…70 Hz
Power consumption	≤ 3 W

Inputs

Input circuits	intrinsically safe acc. to EN 60079, thermocouple, Ni100, Pt100, mV signals
Pt100	(IEC 751), 2, 3 and 4-wire technology, acc. to Gost: Pt100, Cu50, Cu53, Cu100, CuZn100
Ni100	(DIN 43760), 2, 3 and 4-wire technology
Probe current	≤ 0.2 mA
Thermocouples	B, E, J, K, N, R, S, T (ITS 90/IEC 584), L (DIN 43710), acc. to Gost: L, A-1, A-2, A-3, M
Voltage input	-0.160…+0.160 VDC

Outputs

Load resistance, current output	≤ 0.6 kΩ
Output current	0/4…20 mA
Output circuits (digital)	1 x relays (NO)
Switching frequency	≤ 10 Hz
Relay switching voltage	≤ 250 VAC/120 VDC
Switching current per output	≤ 2 A
Switching capacity per output	≤ 500 VA/60 W
Fault current	0 / 22 mA adjustable
Contact quality	AgNi, 3µ Au
Output	adjustable output mode

Response characteristic

Reference temperature	23 °C
Accuracy current output	± 5 µA
Temperature drift analogue output	0.0025 %/K
Temperature drift RTD input	± 3 mΩ/K
Temperature drift TC input	3.2 µV / K (of 320 mV)
Accuracy RTD input	± 50 mΩ
Accuracy TC input	± 15 µV
Cold junction compensation error	2-wire < 100 mΩ after line compensation 3-wire < 100 mΩ with asymmetrical wiring 4-wire < 50 mΩ with cold junction compensation< 2 K with IM-3-CJT < 1 K
Rise time (10-90%)	≤ 1000 ms
Dropout time (90…10%)	≤ 1000 ms

Approvals and declarations

Ex approval acc. to conformity certificate	TÜV 02 ATEX 1898
Device designation	Ⓔx II (1) G, II (1) D [Ex ia Ga] IIC ; [Ex ia Da] IIIC ;
Max. values:	Terminal connection: 1…6
Max. output voltage U_o	≤ 5 V
Max. output current I_o	≤ 2.5 mA
Max. output power P_o	≤ 3 mW
Rated voltage	250 V
Characteristic	linear
Internal inductance/capacitance L_i/C_i	negligibly small

External inductance/capacitance L_o/C_o

Ex ia	IIC	IIB
L_o [mH]	100	100
C_o [µF]	2	9.1

Ex approval acc. to conformity certificate	TÜV 06 ATEX 552978 X
Application area	II 3 G
Protection type	Ex nA nC [ic Gc] IIC T4
Max. values:	Terminal connection: 1…6
Max.output voltage U_o	≤ 5 V
Max. output current I_o	≤ 2.5 mA
Max. output power P_o	≤ 3 mW
Characteristic	linear
Internal inductance/capacitance L_i/C_i	negligibly small

External inductance/capacitance L_o/C_o

Ex ic	IIC	IIB
L_o [mH]	100	100
C_o [µF]	3.6	18

Indication

Operational readiness	green
Switching state	yellow
Error indication	red

Environmental Conditions

Ambient temperature	-25…+70 °C
Storage temperature	-40…+80 °C
Test voltage	2.5 kV

Mechanical data

Tightening torque	0.5 Nm
Electrical connection	4 x 3-pin removable terminal blocks, reverse polarity protected, screw connection
Terminal cross-section	1 x 2.5 mm² / 2 x 1.5 mm²
Housing material	Polycarbonate/ABS
Mounting instruction	for DIN rail / panel
Protection class	IP20
Flammability class acc. to UL 94	V-0
Dimensions	18 x 104 x 110 mm

Approval | Certification	ATEX, IECEx, UL, $_cFM_{us}$, TR CU, INMETRO, CCOE

Temperature measuring amplifier, 1-channel

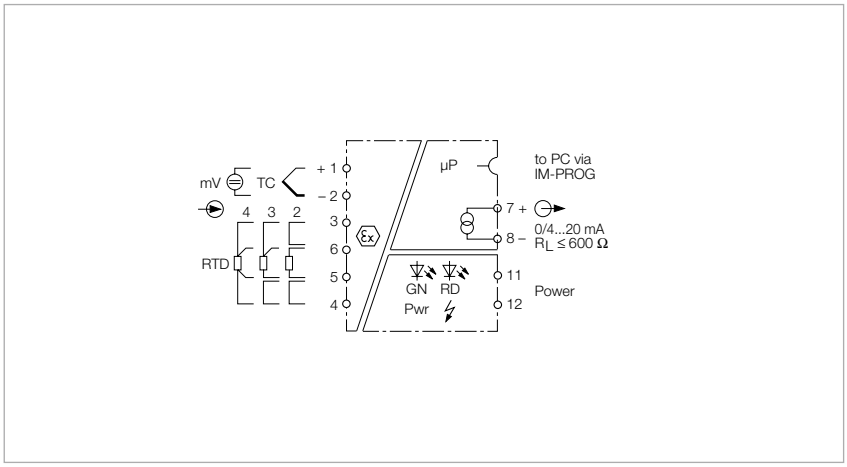

Features

- ATEX, IECEx, $_{C}FM_{US}$, UL, TR CU, INMETRO, CCOE
- Installation in zone 2
- Input for Pt100/ Ni100 resistors, thermocouples and millivolt signals in 2, 3 or 4-wire technology
- Parametrized via PC using PACTware™
- Output: 0/4…20 mA
- Complete galvanic isolation

The 1-channel Ex-area temperature measuring amplifier IM34-11EX-CI/K51 is designed to evaluate the temperature-dependent changes of Ni100/Pt100 RTDs, thermocouples types B, E, J, K, L, N, R, S and T or low voltages in a range of -160…+160 mV and to output them as temperature-linear current signals 0/4…20 mA.

Alternatively, Ni100/Pt100 RTDs in 2, 3 or 4-wire technology can also be operated at the input circuit of the measuring amplifier. The Ni100/Pt100 input can either be used as external cold junction compensation for the thermocouple or as independent measuring input.

The device can be configured and parametrized via PC with the software tool Device Type Manager (DTM). For this, connect the device to the PC via the 3.5 mm jack on the front (the matching transmission cable IM-PROG III can be ordered separately from TURCK).

The following settings are available:
- Connection mode (2, 3 and 4-wire technology)
- Measuring range start
- Measuring range end
- Input circuit monitoring for wire-break
- Current output behaviour in the event of input circuit errors: 0 or > 22 mA
- Internal or external cold junction compensation
- Output current (0/4…20 mA)
- Temperature (°C or °K)
- Mode (resistor, thermocouples, low voltage, line compensation)

The signals are transformed according to ITS 90/IEC 584 for thermocouples and IEC 751 for Pt100 RTDs and provided as temperature-linear signals at the current output.

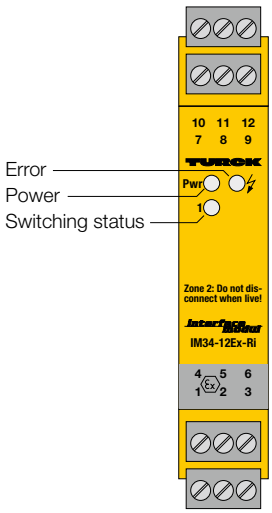

Hans Turck GmbH & Co. KG ▪ Tel. +49 208 49 52-0 ▪ Fax +49 208 49 52-264

Technical data

Type	IM34-11EX-CI/K51
Ident no.	7506635

Power supply

Nominal voltage	Universal voltage supply unit
Operating voltage range	20…125 VDC
Operating voltage range	20…250 VAC
Frequency	40…70 Hz
Power consumption	≤ 3 W

Inputs

Input circuits	intrinsically safe acc. to EN 60079, thermocouple, Ni100, Pt100, intrinsically safe acc. to EN 60079
Pt100	(IEC 751), 2, 3 and 4-wire technology
Ni100	(DIN 43760), 2, 3 and 4-wire technology
Probe current	≤ 0.2 mA
Thermocouples	B, E, J, K, N, R, S, T (ITS 90/IEC 584), L (DIN 43710)
Voltage input	-0.160…+0.160 VDC

Outputs

Load resistance, current output	≤ 0.6 kΩ
Output current	0/4…20 mA
Switching frequency	≤ 1 Hz
Fault current	0 / 22 mA adjustable

Response characteristic

Reference temperature	23 °C
Accuracy current output	± 5 µA
Temperature drift analogue output	0.0025 %/K
Temperature drift RTD input	± 3 mΩ/K
Temperature drift TC input	3.2 µV / K (of 320 mV)
Accuracy RTD input	± 50 mΩ
Accuracy TC input	± 15 µV
Cold junction compensation error	2-wire < 100 mΩ after line compensation 3-wire < 100 mΩ with asymmetrical wiring 4-wire < 50 mΩ with cold junction compensation< 2 K with IM-3-CJT < 1 K
Rise time (10-90%)	≤ 1000 ms
Dropout time (90…10%)	≤ 1000 ms

Approvals and declarations

Ex approval acc. to conformity certificate	TÜV 02 ATEX 1898
Device designation	Ⓔx II (1) G, II (1) D [Ex ia Ga] IIC ; [Ex ia Da] IIIC ;
Max. values:	Terminal connection: 1…6
Max. output voltage U_o	≤ 5 V
Max. output current I_o	≤ 2.5 mA
Max. output power P_o	≤ 3 mW
Rated voltage	250 V
Characteristic	linear
Internal inductance/capacitance L_i/C_i	negligibly small

External inductance/capacitance L_o/C_o

Ex ia	IIC	IIB
L_o [mH]	100	100
C_o [µF]	2	9.1

Ex approval acc. to conformity certificate	TÜV 06 ATEX 552978 X
Application area	II 3 G
Protection type	Ex nA [ic Gc] IIC T4
Max. values:	Terminal connection: 1…6
Max.output voltage U_o	≤ 5 V
Max. output current I_o	≤ 2.5 mA
Max. output power P_o	≤ 3 mW
Characteristic	linear
Internal inductance/capacitance L_i/C_i	negligibly small

External inductance/capacitance L_o/C_o

Ex ic	IIC	IIB
L_o [mH]	100	100
C_o [µF]	3.6	18

Indication

Operational readiness	green

Environmental Conditions

Ambient temperature	-25…+70 °C
Storage temperature	-40…+80 °C
Test voltage	4.0 kV

Mechanical data

Tightening torque	0.5 Nm
Electrical connection	4 x 3-pin removable terminal blocks, reverse polarity protected, screw connection
Terminal cross-section	1 x 2.5 mm² / 2 x 1.5 mm²
Housing material	Polycarbonate/ABS
Mounting instruction	for DIN rail / panel
Protection class	IP20
Flammability class acc. to UL 94	V-0
Dimensions	18 x 104 x 110 mm

Approval | Certification	ATEX, IECEx, UL, $_cFM_{us}$, TR CU, INMETRO, CCOE

Temperature measuring amplifier, 1-channel

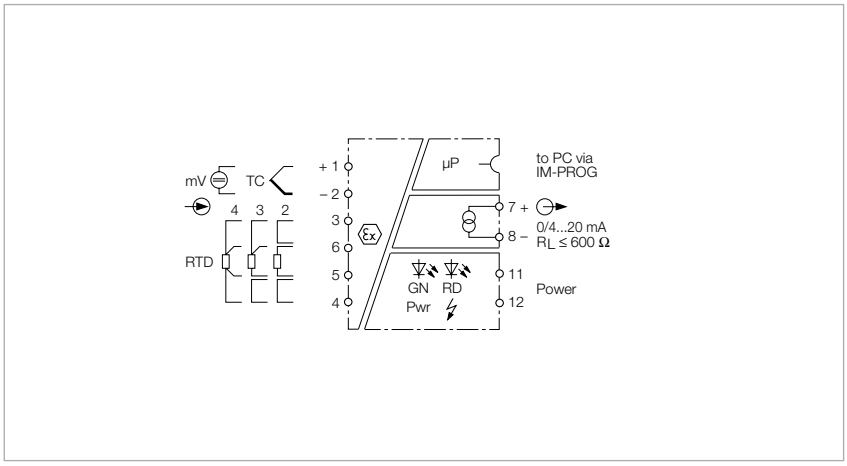

Features

- ATEX, IECEx, $_{C}FM_{US}$, UL, TR CU, INMETRO, CCOE
- Installation in zone 2
- Input for Pt100/ Ni100 resistors, thermocouples and millivolt signals in 2, 3 or 4-wire technology
- Suitable for fast temperature changes, starting with a thermal gradient of 200 µV/s
- Parametrized via PC using PACTware™
- Output: 0/4…20 mA
- Complete galvanic isolation

The 1-channel temperature measuring amplifier IM34-11Ex-CI/K60 is designed to evaluate the temperature-dependent changes of Ni100/Pt100 (RTD), thermocouples (TC) types B, E, J, K, L, N, R, S and T or low voltages in a range of -160…+160 mV and to output them as temperature-linear current signals of 0/4…20 mA. Alternatively, Ni100/Pt100 RTDs in 2, 3 or 4-wire technology can also be operated at the input circuit of the measuring amplifier. The Ni100/Pt100 input can either be used as external cold junction compensation for the thermocouple or as independent measuring input.

If the thermocouples lines are routed to the temperature measuring amplifier TURCK recommends the use the cold junction compensation module IM-3-CJT (Ident no.: 6900524) This way the maximum possible accuracy is achieved. In order to increase the measurment speed with fast temperature changes on thermocouples, the device switches into the „Fast Mode“ after 200 ms at the very latest after a gradient of 200 µV/s has been exceeded. Thereafter the cycle time of the thermal voltage measurement is < 80 ms. This means that no wire-break monitoring and no measurement of the cold junction temperature will occur. After the gradient drops below 80 µV/s the device will switch back to „Normal Mode“.

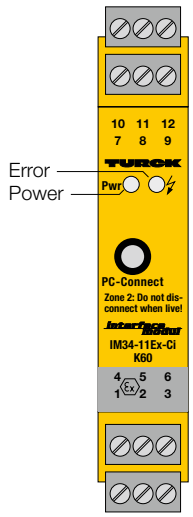

Technical data

Type	IM34-11EX-CI/K60
Ident no.	7506636

Power supply	
Operating voltage range	20…125 VDC
Operating voltage range	20…250 VAC
Frequency	40…70 Hz

Inputs	
Input circuits	intrinsically safe acc. to EN 60079, thermocouple, Pt100, Ni 00, mV signals
Pt100	(IEC 751), 2, 3 and 4-wire technology
Ni100	(DIN 43760), 2, 3 and 4-wire technology
Probe current	≤ 0.2 mA
Thermocouples	B, E, J, K, N, R, S, T (ITS 90/IEC 584), L (DIN 43710)
Voltage input	-0.160…+0.160 VDC

Outputs	
Output current	0/4…20 mA
Switching frequency	≤ 1 Hz
Fault current	0 / 22 mA adjustable
Output	adjustable output mode

Response characteristic	
Reference temperature	23 °C
Accuracy current output	± 5 µA
Temperature drift analogue output	0.0025 %/K
Temperature drift RTD input	± 3 mΩ/K
Temperature drift TC input	3.2 µV / K (of 320 mV)
Accuracy RTD input	± 50 mΩ
Accuracy TC input	± 15 µV
Cold junction compensation error	2-wire < 100 mΩ after line compensation 3-wire < 100 mΩ with asymmetrical wiring 4-wire < 50 mΩ with cold junction compensation< 2 K with IM-3-CJT < 1 K

Approvals and declarations	
Ex approval acc. to conformity certificate	TÜV 02 ATEX 1898
Device designation	Ⓔx II (1) G, II (1) D [Ex ia Ga] IIC ; [Ex ia Da] IIIC ;
Max. values:	Terminal connection: 1…6
Max. output voltage U_o	≤ 5 V
Max. output current I_o	≤ 2.5 mA
Max. output power P_o	≤ 3 mW
Characteristic	linear
Internal inductance/capacitance L_i/C_i	negligibly small

External inductance/capacitance L_o/C_o

Ex ia	IIC	IIB
L_o [mH]	100	100
C_o [µF]	2	9.1

Ex approval acc. to conformity certificate	TÜV 06 ATEX 552978 X
Application area	II 3 G
Protection type	Ex nA [ic Gc] IIC T4
Max. values:	Terminal connection: 1…6
Max.output voltage U_o	≤ 5 V
Max. output current I_o	≤ 2.5 mA
Max. output power P_o	≤ 3 mW
Characteristic	linear
Internal inductance/capacitance L_i/C_i	negligibly small

External inductance/capacitance L_o/C_o

Ex ic	IIC	IIB
L_o [mH]	100	100
C_o [µF]	3.6	18

Environmental Conditions	
Ambient temperature	-25…+70 °C
Storage temperature	-40…+80 °C
Test voltage	2.5 kV

Mechanical data	
Tightening torque	0.5 Nm
Electrical connection	4 x 3-pin removable terminal blocks, reverse polarity protected, screw connection
Terminal cross-section	1 x 2.5 mm² / 2 x 1.5 mm²
Housing material	Polycarbonate/ABS
Mounting instruction	for DIN rail / panel
Protection class	IP20
Flammability class acc. to UL 94	V-0
Dimensions	18 x 104 x 110 mm

Approval | Certification	ATEX, IECEx, UL, cFMus, TR CU, INMETRO, CCOE

Temperature measuring amplifier, 1-channel

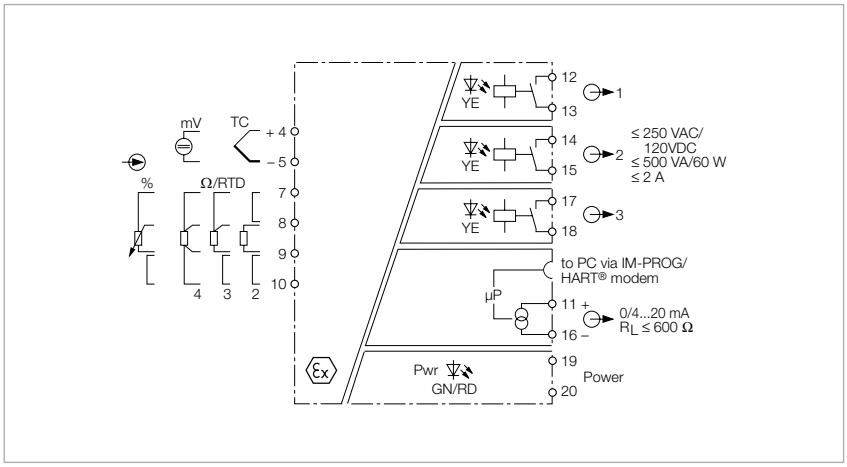

Features

- ATEX, IECEx, $_{C}FM_{US}$, TIIS
- Installation in zone 2
- Monitors over and underrange of analog values and window limits
- Line monitoring
- Parametrized via PC (FDT / DTM), front-panel switch or HART®
- Input for Pt100/ Ni100 resistors, variable resistors, thermocouples and millivolt signals
- Output circuit: 0/4…20 mA
- 3 relay outputs
- Universal operating voltage
- Complete galvanic isolation

The 1-channel Ex-area temperature measuring amplifier IM34-14Ex-CDRi is designed to evaluate the temperature-dependent changes of Ni100/Pt100 RTDs and thermocouples types B, E, J, K, L, N, R, S, T and to output them as temperature-linear current signals 0/4…20 mA. Furthermore, resistors, potentiometers or low voltages can be mapped linearly as current signals in a range between -160…+160 mV.

The device features one output for analog signals 0/4…20 mA and three outputs for limit value relays. The measured value can be viewed on a 2-line display.

The measured value is permanently written to a ring buffer with space for 8000 values. The writing process is stopped with a predefined trigger event, like for example “limit value exceeded“. After that, the stored signal sequence can be read out.

The device can be configured and parametrized via PC (FDT/DTM); the appropriate TURCK-PROG III transmission cable is available from TURCK. A basic scope of parameters can be set via buttons and display on the front or remotely via the current interface and HART®.

Cold junction compensation of thermocouples is either realized via an externally connected Pt100/Ni100 resistor, via temperature measured inside the amplifier or via an individually adjustable constant temperature value.

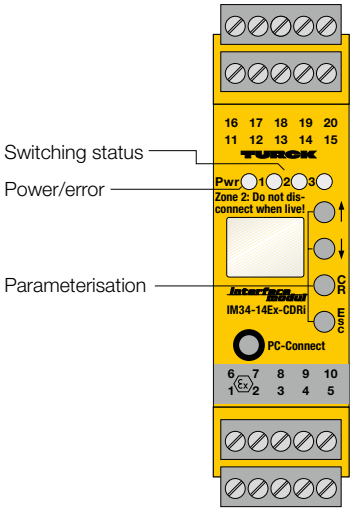

Output relay – Load curve

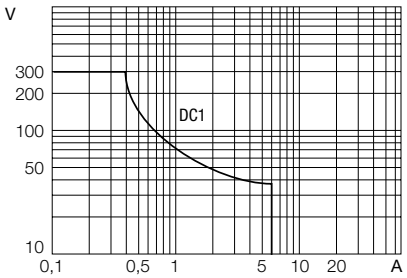

Output relay – Electrical lifetime

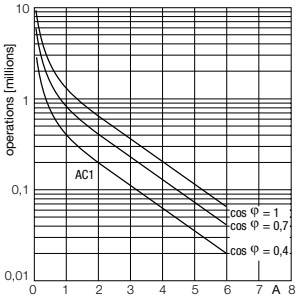

Technical data

Type	IM34-14EX-CDRI
Ident no.	7506634

Power supply

Operating voltage range	20…125 VDC
Operating voltage range	20…250 VAC
Frequency	40…70 Hz
Power consumption	≤ 3 W

Inputs

Input circuits	intrinsically safe acc. to EN 60079, thermocouple, Ni100, Pt100, mV signals
Pt100	(IEC 751), 2, 3 and 4-wire technology
Ni100	(DIN 43760), 2, 3 and 4-wire technology
Probe current	≤ 0.2 mA
Thermocouples	B, E, J, K, N, R, S, T (ITS 90/IEC 584), L (DIN 43710)
Nominal resistance	0…1.5 kΩ
Voltage input	-0.160…+0.160 VDC

Outputs

Load resistance, current output	≤ 0.6 kΩ
Output current	0/4…20 mA
Output circuits (digital)	3 x relays (NO)
Switching frequency	≤ 10 Hz
Relay switching voltage	≤ 250 VAC/120 VDC
Switching current per output	≤ 2 A
Switching capacity per output	≤ 500 VA/60 W
Fault current	0 / 22 mA adjustable
Contact quality	AgNi, 3µ Au
Output	adjustable output mode

Response characteristic

Reference temperature	23 °C
Accuracy current output	± 5 µA
Temperature drift analogue output	0.0025 %/K
Temperature drift RTD input	± 3 mΩ/K
Temperature drift TC input	3.2 µV / K (of 320 mV)
Accuracy RTD input	± 50 mΩ
Accuracy TC input	± 15 µV
Cold junction compensation error	2-wire < 100 mΩ after line compensation 3-wire < 100 mΩ with asymmetrical wiring 4-wire < 50 mΩ with cold junction compensation< 2 K with IM-3-CJT < 1 K
Rise time (10-90%)	≤ 1000 ms
Dropout time (90…10%)	≤ 1000 ms

Approvals and declarations

Ex approval acc. to conformity certificate	TÜV 05 ATEX 2877
Device designation	⟨Ex⟩ II (1) GD [EEx ia] IIC
Max. values:	Terminal connection: 4…10
Max. output voltage U_o	≤ 5 V
Max. output current I_o	≤ 9 mA
Max. output power P_o	≤ 11 mW
Rated voltage	250 V
Characteristic	linear
Internal inductance/capacitance L_i/C_i	L_i = 75 µH, C_i negligibly small

External inductance/capacitance L_o/C_o

Ex ia	IIC	IIB
L_o [mH]	5	10
C_o [µF]	2.9	13

Ex approval acc. to conformity certificate	TÜV 05 ATEX 2889 X
Application area	II 3 G
Protection type	EEx nA nC [nL]
Max. values:	Terminal connection: 4…10
Max.output voltage U_o	≤ 5 V
Max. output current I_o	≤ 9 mA
Max. output power P_o	≤ 11 mW
Characteristic	linear
Internal inductance/capacitance L_i/C_i	L_i = 75 µH, C_i negligibly small

External inductance/capacitance L_o/C_o

Ex ia	IIC	IIB
L_o [mH]	10	20
C_o [µF]	4.4	21

Indication

Operational readiness	green
Switching state	yellow
Error indication	red

Environmental Conditions

Ambient temperature	-25…+70 °C
Storage temperature	-40…+80 °C
Relative humidity	≤ 95 %
Test voltage	2.5 kV

Mechanical data

Tightening torque	0.5 Nm
Electrical connection	4 x 5-pin removable terminal blocks, reverse polarity protected, screw connection
Terminal cross-section	1 x 2.5 mm² / 2 x 1.5 mm²
Housing material	Polycarbonate/ABS
Mounting instruction	for DIN rail / panel
Protection class	IP20
Flammability class acc. to UL 94	V-0
Dimensions	27 x 104 x 110 mm

Approval | Certification	ATEX, IECEx, $_cFM_{us}$, TIIS

Ouput analog signal isolator, 1-channel

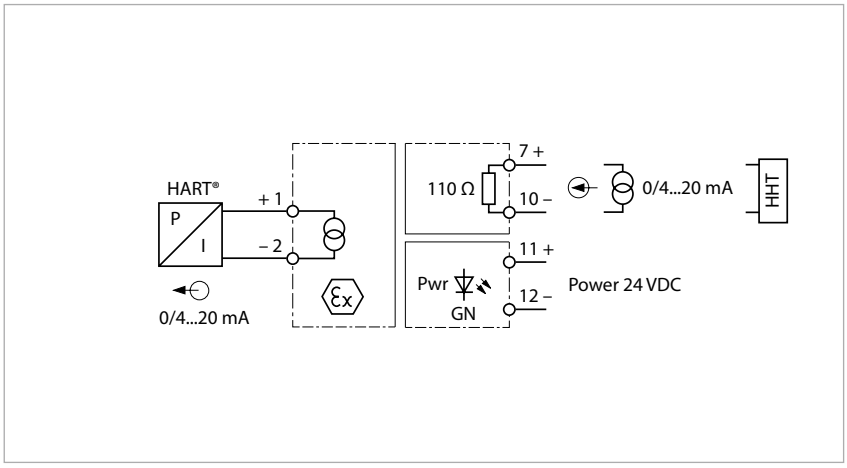

Features

- ATEX, IECEx, UL, $_{C}FM_{US}$, TR CU
- Installation in zone 2
- Intelligent actuators supplied via HART® communication interface
- Input circuit: 0/4…20 mA
- Output circuit: 0/4…20 mA, intrinsically-safe
- SIL2
- Removable terminal blocks, screwable, with 2 mm test socket
- Galvanic isolation of input circuits, output circuits and power supply

The 1-channel signal isolator IM35-11EX-HI/24VDC is designed to transmit the normalized current signal galvanically isolated 1:1 from the non-Ex area to the Ex-area. Besides the analog signals, digital HART® communication signals can also be transmitted bidirectionally.

Typical applications are for example, the control of I/P converters (at control valves for example) or indicators in the Ex-area.

The actuators are connected to the output terminals 1/2. Handheld terminals [HHT] can be connected to the output and input terminals 7/10.

In addition, the removable terminal blocks are equipped with 2 mm test sockets for signal control.

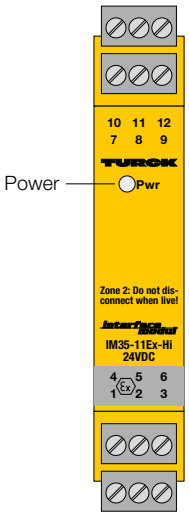

Technical data

Type	IM35-11EX-HI/24VDC
Ident no.	7506516

Power supply	
Nominal voltage	24 VDC
Operating voltage range	19…29 VDC
Power consumption	≤ 2.2 W

Inputs	
Current input	0/4…20 mA
Input resistance (current)	≤ 110 Ω

Outputs	
Load resistance, current output	≤ 0.6 kΩ
Output current	0/4…20 mA

Response characteristic	
Measuring accuracy	≤ 0.1 % of full scale
Reference temperature	23 °C
Temperature drift	≤ 0.005 % / K
Rise time (10-90%)	≤ 90 ms
Dropout time (90…10%)	≤ 90 ms

Approvals and declarations	
Ex approval acc. to conformity certificate	TÜV 03 ATEX 2311
Device designation	Ⓔx II (1) G, II (1) D [Ex ia Ga] IIC; [Ex ia Da] IIIC
Max. values:	Terminal connection: 1+2
Max. output voltage U_o	≤ 15.9 V
Max. output current I_o	≤ 60 mA
Max. output power P_o	≤ 470 mW
Internal resistance R_i	528 Ω
Rated voltage	250 V
Characteristic	Trapezoidal
Internal inductance/capacitance L_i/C_i	L_i=negligibly small; C_i=5nF

External inductance/capacitance L_o/C_o

Ex ia	IIC		IIB	
L_o [mH]	5	0.5	10	0.5
C_o [nF]	135	330	860	2200

Ex approval acc. to conformity certificate	TÜV 06 ATEX 553057 X
Application area	II 3 G
Protection type	Ex nA [ic Gc] IIC T4 Gc
Max. values:	Terminal connection: 1+2
Max.output voltage U_o	≤ 15.9 V
Max. output current I_o	≤ 60 mA
Max. output power P_o	≤ 470 mW
Internal resistance R_i	528 Ω
Characteristic	trapezoidal
Internal inductance/capacitance L_i/C_i	L_i=negligibly small; C_i=5nF

External inductance/capacitance L_o/C_o

Ex ic	IIC		IIB	
L_o [mH]	5	0.5	10	0.5
C_o [nF]	290	640	1700	3900

Declaration	SIL 2 acc. to EXIDA FMEDA

Indication	
Operational readiness	green

Environmental Conditions	
Ambient temperature	-25…+70 °C
Storage temperature	-40…+80 °C
Test voltage	4.0 kV
MTTF	162 years acc. to SN 29500 (Ed. 99) 40 °C

Mechanical data	
Tightening torque	0.5 Nm
Electrical connection	4 x 3-pin removable terminal blocks with test socket, reverse polarity protected, screw connection
Terminal cross-section	1 x 2.5 mm² / 2 x 1.5 mm²
Housing material	Polycarbonate/ABS
Mounting instruction	for DIN rail / panel
Protection class	IP20
Flammability class acc. to UL 94	V-0
Dimensions	18 x 110 x 110 mm

Approval | Certification	ATEX, IECEx, UL, $_cFM_{us}$, TR CU

Ouput analog signal isolator, 2-channel

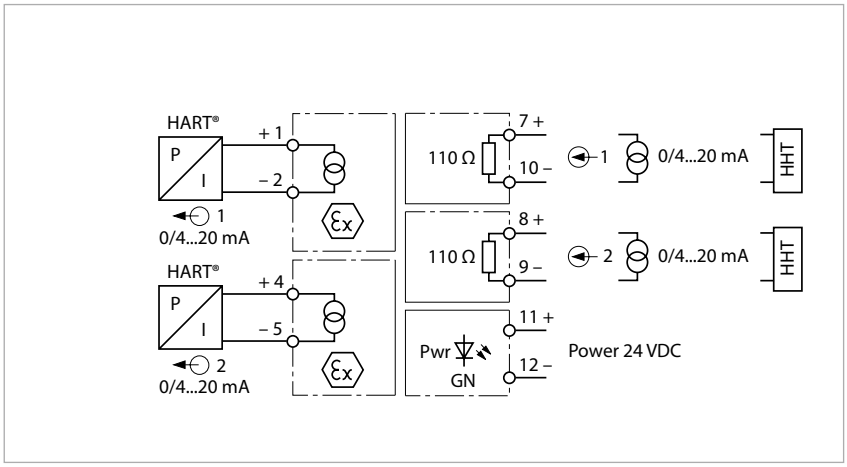

Features

- ATEX, IECEx, UL, $_{C}FM_{US}$, TR CU
- Installation in zone 2
- Intelligent actuators supplied via HART® communication interface
- Input circuits: 0/4…20 mA
- Output circuits: 0/4…20 mA, intrinsically-safe
- SIL2
- Removable terminal blocks, screwable, with 2 mm test socket
- Complete galvanic isolation

The 2-channel signal isolator IM35-22EX-HI/24VDC is designed to transmit the normalized current signal galvanically isolated 1:1 from the non-Ex area to the Ex-area. Besides the analog signals, digital HART® communication signals can also be transmitted bidirectionally.

Typical applications are for example, the control of I/P converters (at control valves for example) or indicators in the Ex-area.

The actuators are connected to the output terminals 1/2 and 4/5. Handheld terminals [HHT] can be connected to the output and input terminals 7/10 and 8/9.

In addition, the removable terminal blocks are equipped with 2 mm test sockets for signal control.

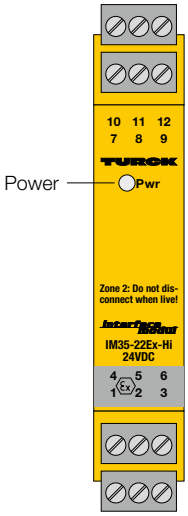

Technical data

Type	IM35-22EX-HI/24VDC
Ident no.	7506515

Power supply	
Nominal voltage	24 VDC
Operating voltage range	19…29 VDC
Power consumption	≤ 2.2 W

Inputs	
Current input	0/4…20 mA
Input resistance (current)	≤ 110 Ω

Outputs	
Load resistance, current output	≤ 0.6 kΩ
Output current	0/4…20 mA

Response characteristic	
Measuring accuracy	≤ 0.1 % of full scale
Reference temperature	23 °C
Temperature drift	≤ 0.005 % / K
Rise time (10-90%)	≤ 90 ms
Dropout time (90…10%)	≤ 90 ms

Approvals and declarations	
Ex approval acc. to conformity certificate	TÜV 03 ATEX 2311
Device designation	⟨Ex⟩ II (1) G, II (1) D [Ex ia Ga] IIC; [Ex ia Da] IIIC
Max. values:	Terminal connection: 1+2 / 4+5
Max. output voltage U_o	≤ 15.9 V
Max. output current I_o	≤ 60 mA
Max. output power P_o	≤ 470 mW
Internal resistance R_i	528 Ω
Rated voltage	250 V
Characteristic	Trapezoidal
Internal inductance/capacitance L_i/C_i	L_i=negligibly small; C_i=5nF

External inductance/capacitance L_o/C_o

Ex ia	IIC		IIB	
L_o [mH]	5	0.5	10	0.5
C_o [nF]	135	330	860	2200

Ex approval acc. to conformity certificate	TÜV 06 ATEX 553057 X
Application area	II 3 G
Protection type	Ex nA [ic Gc] IIC T4 Gc
Max. values:	Terminal connection: 1+2 / 4+5
Max.output voltage U_o	≤ 15.9 V
Max. output current I_o	≤ 60 mA
Max. output power P_o	≤ 470 mW
Internal resistance R_i	528 Ω
Characteristic	trapezoidal
Internal inductance/capacitance L_i/C_i	L_i=negligibly small; C_i=5nF

External inductance/capacitance L_o/C_o

Ex ic	IIC		IIB	
L_o [mH]	5	0.5	10	0.5
C_o [nF]	290	640	1700	3900

Declaration	SIL 2 acc. to EXIDA FMEDA

Indication	
Operational readiness	green

Environmental Conditions	
Ambient temperature	-25…+70 °C
Storage temperature	-40…+80 °C
Test voltage	4.0 kV
MTTF	162 years acc. to SN 29500 (Ed. 99) 40 °C

Mechanical data	
Tightening torque	0.5 Nm
Electrical connection	4 x 3-pin removable terminal blocks with test socket, reverse polarity protected, screw connection
Terminal cross-section	1 x 2.5 mm² / 2 x 1.5 mm²
Housing material	Polycarbonate/ABS
Mounting instruction	for DIN rail / panel
Protection class	IP20
Flammability class acc. to UL 94	V-0
Dimensions	18 x 110 x 110 mm

Approval | Certification	ATEX, IECEx, UL, $_cFM_{us}$, TR CU

Ouput analog signal isolator, 1-channel

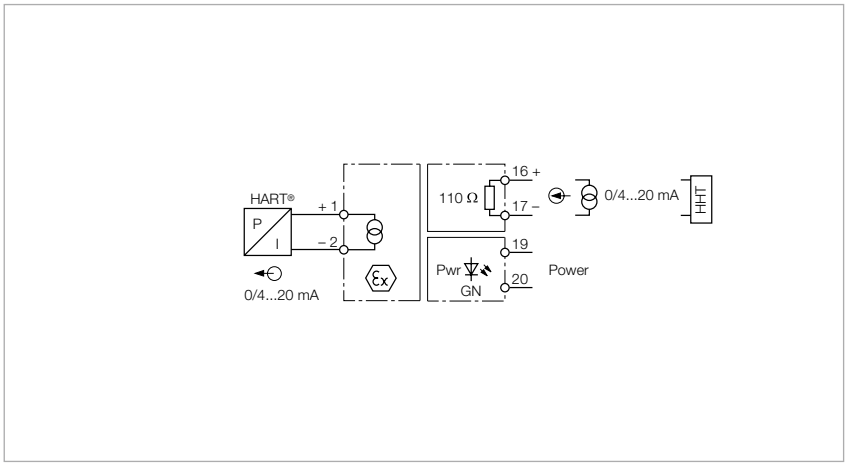

Features

- ATEX, TR CU
- Installation in zone 2
- Intelligent actuators supplied via HART® communication interface
- Input circuit: 0/4…20 mA
- Output circuit: 0/4…20 mA, intrinsically-safe
- Universal operating voltage
- Complete galvanic isolation

The 1-channel signal isolator IM35-11EX-HI is designed to transmit the normalized current signal galvanically isolated 1:1 from the non-Ex area to the Ex-area. Besides the analog signals, digital HART® communication signals can also be transmitted bidirectionally.

Typical applications are for example, the control of I/P converters (at control valves for example) or indicators in the Ex-area.

The actuators are connected to the output terminals 1/2. Handheld terminals [HHT] can be connected to the output and input terminals 16/17.

In addition, the removable terminal blocks are equipped with 2 mm test sockets for signal control.

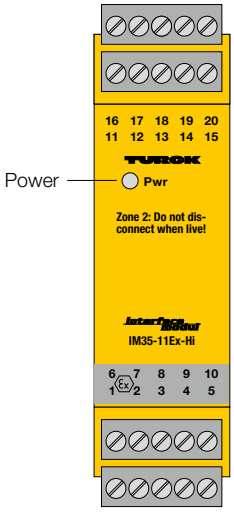

Technical data

Type	IM35-11EX-HI
Ident no.	7506517

Power supply	
Nominal voltage	Universal voltage supply unit
Operating voltage range	20…125 VDC
Operating voltage range	20…250 VAC
Frequency	40…70 Hz
Power consumption	≤ 2 W

Inputs	
Current input	0/4…20 mA
Input resistance (current)	≤ 110 Ω

Outputs	
Load resistance, current output	≤ 0.6 kΩ
Output current	0/4…20 mA

Response characteristic	
Measuring accuracy	≤ 0.1 % of full scale
Reference temperature	23 °C
Temperature drift	≤ 0.005 % / K
Rise time (10-90%)	≤ 90 ms
Dropout time (90…10%)	≤ 90 ms

Approvals and declarations	
Ex approval acc. to conformity certificate	IBExU 08 ATEX 1130
Device designation	⟨Ex⟩ II (1) G, II (1) D [Ex ia] IIC/IIB; [Ex ia Da]
Max. values:	Terminal connection: 1+2
Max. output voltage U_o	≤ 15.9 V
Max. output current I_o	≤ 59.5 mA
Max. output power P_o	≤ 467 mW
Rated voltage	250 V
Characteristic	Trapezoidal
Internal inductance/capacitance L_i/C_i	L_i negligible, C_i = 5.2 nF

External inductance/capacitance L_o/C_o

Ex ia	IIC		IIB	
L_o [mH]	5	1	5	1
C_o [µF]	0.135	0.285	1.1	1.8

Ex approval acc. to conformity certificate	IBEXU 08 ATEX B020 X
Application area	II 3 G
Protection type	Ex nA [nL] IIC/IIB T4 X
Max. values:	Terminal connection: 1+2
Max.output voltage U_o	≤ 15.9 V
Max. output current I_o	≤ 59.5 mA
Max. output power P_o	≤ 467 mW
Internal resistance R_i	528 Ω
Characteristic	trapezoidal
Internal inductance/capacitance L_i/C_i	L_i negligible, C_i = 5.2 nF

External inductance/capacitance L_o/C_o

Ex nL	IIC		IIB	
L_o [mH]	5	1	5	1
C_o [µF]	0.285	0.515	2.1	3.2

Indication	
Operational readiness	green

Environmental Conditions	
Ambient temperature	-25…+70 °C
Storage temperature	-40…+80 °C
Test voltage	4.0 kV

Mechanical data	
Tightening torque	0.5 Nm
Electrical connection	4 x 5-pin removable terminal blocks with test socket, reverse polarity protected, screw connection
Terminal cross-section	1 x 2.5 mm² / 2 x 1.5 mm²
Housing material	Polycarbonate/ABS
Mounting instruction	for DIN rail / panel
Protection class	IP20
Flammability class acc. to UL 94	V-0
Dimensions	27 x 110 x 110 mm

Approval | Certification	ATEX, TR CU

Ouput analog signal isolator, 2-channel

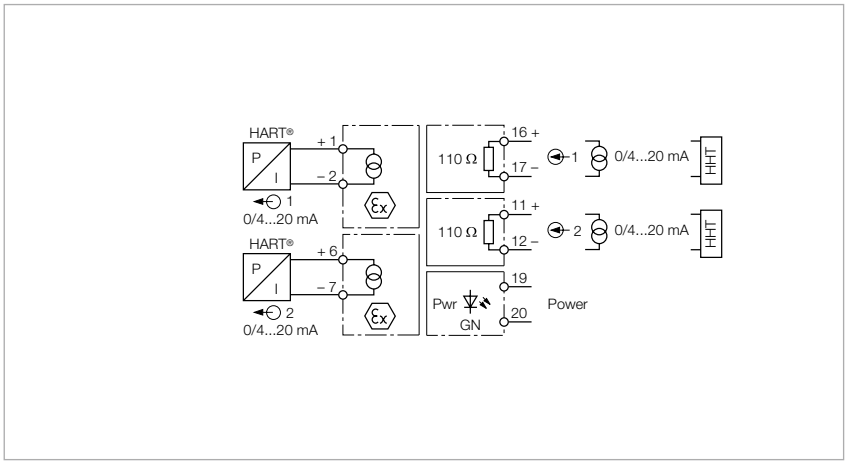

Features

- ATEX, TR CU
- Installation in zone 2
- Intelligent actuators supplied via HART® communication interface
- Input circuits: 0/4…20 mA
- Output circuits: 0/4…20 mA, intrinsically-safe
- Universal operating voltage
- Complete galvanic isolation

The 2-channel signal isolator IM35-22EX-HI is designed to transmit the normalized current signal galvanically isolated 1:1 from the non-Ex area to the Ex-area. Besides the analog signals, digital HART® communication signals can also be transmitted bidirectionally.

Typical applications are for example, the control of I/P converters (at control valves for example) or indicators in the Ex-area.

The actuators are connected to the output terminals 1/2 and 6/7. Handheld terminals [HHT] can be connected to the output and input terminals 16/17 and 11/12.

In addition, the removable terminal blocks are equipped with 2 mm test sockets for signal control.

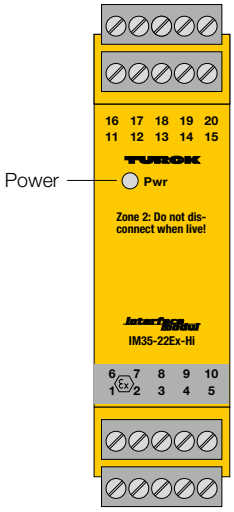

Technical data

Type	IM35-22EX-HI
Ident no.	7506518

Power supply	
Nominal voltage	Universal voltage supply unit
Operating voltage range	20…125 VDC
Operating voltage range	20…250 VAC
Frequency	40…70 Hz
Power consumption	≤ 2.7 W

Inputs	
Current input	0/4…20 mA
Input resistance (current)	≤ 110 Ω

Outputs	
Load resistance, current output	≤ 0.6 kΩ
Output current	0/4…20 mA

Response characteristic	
Measuring accuracy	≤ 0.1 % of full scale
Reference temperature	23 °C
Temperature drift	≤ 0.005 % / K
Rise time (10-90%)	≤ 90 ms
Dropout time (90…10%)	≤ 90 ms

Approvals and declarations	
Ex approval acc. to conformity certificate	IBExU 08 ATEX 1130
Device designation	Ⓔx II (1) G, II (1) D [Ex ia] IIC/IIB; [Ex ia Da]
Max. values:	Terminal connection: 1+2 / 6+7
Max. output voltage U_o	≤ 15.9 V
Max. output current I_o	≤ 59.5 mA
Max. output power P_o	≤ 467 mW
Rated voltage	250 V
Characteristic	Trapezoidal
Internal inductance/capacitance L_i/C_i	L_i negligible, C_i = 5.2 nF

External inductance/capacitance L_o/C_o

Ex ia	IIC		IIB	
L_o [mH]	5	1	5	1
C_o [µF]	0.135	0.285	1.1	1.8

Ex approval acc. to conformity certificate	IBEXU 08 ATEX B020 X
Application area	II 3 G
Protection type	Ex nA [nL] IIC/IIB T4 X
Max. values:	Terminal connection: 1+2 / 6+7
Max.output voltage U_o	≤ 15.9 V
Max. output current I_o	≤ 59.5 mA
Max. output power P_o	≤ 467 mW
Internal resistance R_i	528 Ω
Characteristic	trapezoidal
Internal inductance/capacitance L_i/C_i	L_i negligible, C_i = 5.2 nF

External inductance/capacitance L_o/C_o

Ex nL	IIC		IIB	
L_o [mH]	5	1	5	1
C_o [µF]	0.285	0.515	2.1	3.2

Indication	
Operational readiness	green

Environmental Conditions	
Ambient temperature	-25…+70 °C
Storage temperature	-40…+80 °C
Test voltage	4.0 kV

Mechanical data	
Tightening torque	0.5 Nm
Electrical connection	4 x 5-pin removable terminal blocks with test socket, reverse polarity protected, screw connection
Terminal cross-section	1 x 2.5 mm² / 2 x 1.5 mm²
Housing material	Polycarbonate/ABS
Mounting instruction	for DIN rail / panel
Protection class	IP20
Flammability class acc. to UL 94	V-0
Dimensions	27 x 110 x 110 mm

Approval | Certification	ATEX, TR CU

Potentiometer amplifier, 1-channel

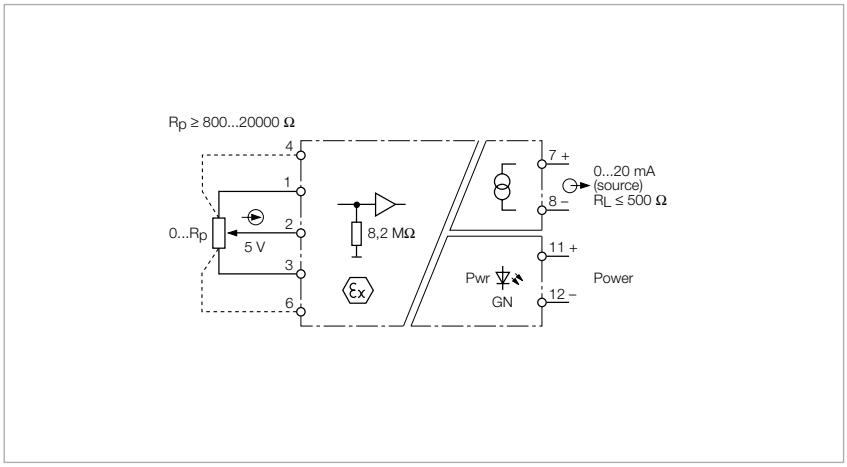

Features

- ATEX, TR CU
- Transmission of potentiometer signals from the Ex area
- Potentiometer, nominal resistance: 0.8…20 kΩ
- Output circuit: 0…20 mA
- Complete galvanic isolation

The 1-channel potentiometer amplifier IM36-11EX-I/24VDC is designed to transmit signals from 3 or 5-wire potentiometers galvanically isolated from the Ex area to the non-Ex area and to converted them into normalized 0…20 mA analog signals. The resistance value of the wiper contact is collected in a range between 0 Ω and the nominal resistance value (end value) of the potentiometer and converted into a linear value.

A potentiometer is defined by its nominal resistance. Any potentiometer can be connected, provided the nominal resistance is 800…200000 Ω. Common potentiometers featuring a nominal resistance of 1 kΩ or 10 kΩ can thus be used. The admissible line resistance is maximally 50 Ω with a potentiometer resistance of 800 Ω.

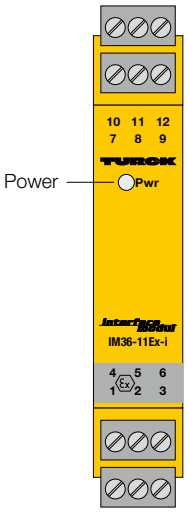

Technical data

Type	IM36-11EX-I/24VDC
Ident no.	7509525

Power supply	
Nominal voltage	24 VDC
Operating voltage range	19…29 VDC
Power consumption	≤ 2 W

Inputs	
Input circuits	potentiometer
Cable resistance	≤ 50 Ω
Voltage on resistor	5 VDC
Nominal resistance	0.8…20 kΩ

Outputs	
Output current	0…20 mA

Response characteristic	
Measuring accuracy	≤ 0.3 % of full scale

Approvals and declarations	
Ex approval acc. to conformity certificate	TÜV 99 ATEX 1405
Device designation	Ⓔx II (1) G [EEx ia] IIC
Max. values:	Terminal connection: 1…6
Max. output voltage U_o	≤ 13.8 V
Max. output current I_o	≤ 35 mA
Max. output power P_o	≤ 121 mW
Rated voltage	250 V
Characteristic	linear

External inductance/capacitance L_o/C_o

	EEx ia IIC	EEx ia IIB
L_o [mH]	20.0	100.0
C_o [nF]	760	4900

Indication	
Operational readiness	green

Environmental Conditions	
Ambient temperature	-25…+60 °C
Storage temperature	-40…+80 °C
Test voltage	2.5 kV

Mechanical data	
Tightening torque	0.5 Nm
Electrical connection	4 x 3-pin removable terminal blocks, reverse polarity protected, screw connection
Terminal cross-section	1 x 2.5 mm² / 2 x 1.5 mm²
Housing material	Polycarbonate/ABS
Mounting instruction	for DIN rail / panel
Protection class	IP20
Flammability class acc. to UL 94	V-0
Dimensions	18 x 104 x 110 mm

Approval | Certification	ATEX, TR CU

Potentiometer amplifier, 1-channel

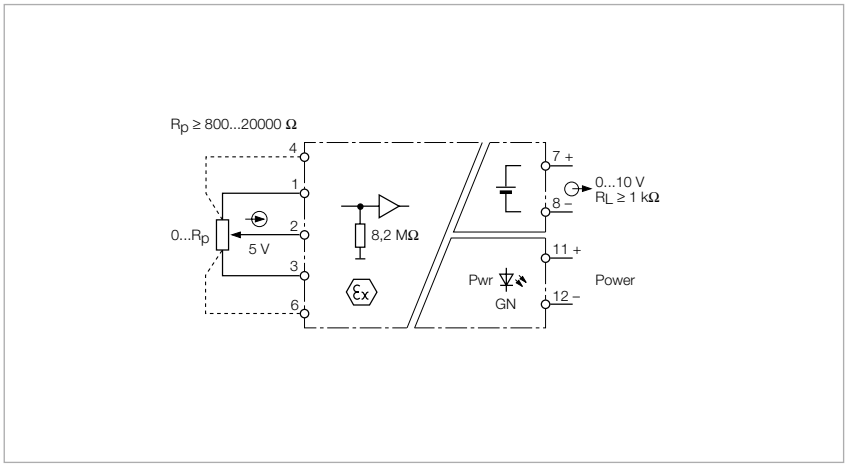

Features

- ATEX, TR CU
- Transmission of potentiometer signals from the Ex area
- Potentiometer, nominal resistance: 0.8…20 kΩ
- Output circuit: 0…10 V
- Complete galvanic isolation

The 1-channel potentiometer amplifier IM36-11EX-U/24VDC is designed to transmit signals from 3 or 5-wire potentiometers galvanically isolated from the Ex area to the non-Ex area and to converted them into normalized 0…10 V analog signals. The resistance value of the wiper contact is collected in a range between 0 Ω and the nominal resistance value (end value) of the potentiometer and converted into a linear value.

A potentiometer is defined by its nominal resistance. Any potentiometer can be connected, provided the nominal resistance is 800…200000 Ω. Common potentiometers featuring a nominal resistance of 1 kΩ or 10 kΩ can thus be used. The admissible line resistance is maximally 50 Ω with a potentiometer resistance of 800 Ω.

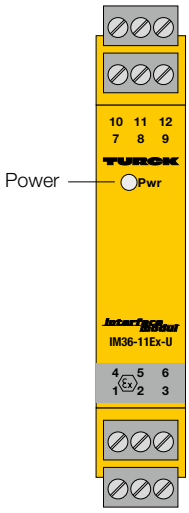

Technical data

Type	IM36-11EX-U/24VDC
Ident no.	7509526

Power supply	
Nominal voltage	24 VDC
Operating voltage range	19…29 VDC
Power consumption	≤ 2 W

Inputs	
Input circuits	potentiometer
Cable resistance	≤ 50 Ω
Voltage on resistor	5 VDC
Nominal resistance	0.8…20 kΩ

Outputs	
Output voltage	0…10 V

Response characteristic	
Measuring accuracy	≤ 0.3 % of full scale

Approvals and declarations	
Ex approval acc. to conformity certificate	TÜV 99 ATEX 1405
Device designation	⟨Ex⟩ II (1) G [EEx ia] IIC
Max. values:	Terminal connection: 1…6
Max. output voltage U_o	≤ 13.8 V
Max. output current I_o	≤ 35 mA
Max. output power P_o	≤ 121 mW
Rated voltage	250 V
Characteristic	linear

External inductance/capacitance L_o/C_o

	EEx ia IIC	EEx ia IIB
L_o [mH]	20.0	100.0
C_o [nF]	760	4900

Indication	
Operational readiness	green

Environmental Conditions	
Ambient temperature	-25…+60 °C
Storage temperature	-40…+80 °C
Test voltage	2.5 kV

Mechanical data	
Tightening torque	0.5 Nm
Electrical connection	4 x 3-pin removable terminal blocks, reverse polarity protected, screw connection
Terminal cross-section	1 x 2.5 mm² / 2 x 1.5 mm²
Housing material	Polycarbonate/ABS
Mounting instruction	for DIN rail / panel
Protection class	IP20
Flammability class acc. to UL 94	V-0
Dimensions	18 x 104 x 110 mm

Approval | Certification	ATEX, TR CU

Potentiometer amplifier, 2-channel

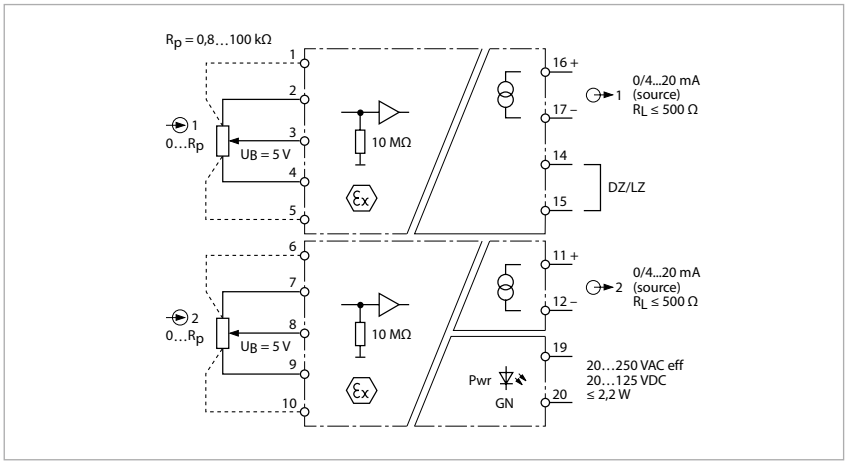

Features

- ATEX, IECEx, TR CU
- Installation in zone 2
- Transmission of potentiometer signals from the Ex area
- Potentiometer, nominal resistance: 0.8…100 kΩ
- Output circuit: 0/4…20 mA
- Complete galvanic isolation

The 2-channel potentiometer amplifier IM36-22EX-U is designed to transmit signals from 3 or 5-wire potentiometers galvanically isolated from the Ex area to the non-Ex area and to convert them into normalized 0…20 mA analog signals. Live-zero operation is activated for both channels through bridging terminals 14 and 15. The resistance value of the wiper contact is collected in a range between 0 Ω and the nominal resistance value (end value) of the potentiometer and converted into a linear value.

A potentiometer is defined by its nominal resistance. Any potentiometer can be connected, provided the nominal resistance is 800…100000 Ω. Common potentiometers featuring a nominal resistance of 1 kΩ or 10 kΩ can thus be used. The admissible line resistance is maximally 50 Ω with a potentiometer resistance of 800 Ω.

The incremental potentiometer's start and end point can be adjusted separately for each channel. This is necessary to protect the incremental potentiometer from damage which can be caused by critical rotation angles smaller than 5 % and greater than 95 % of the absolute rotational torque.

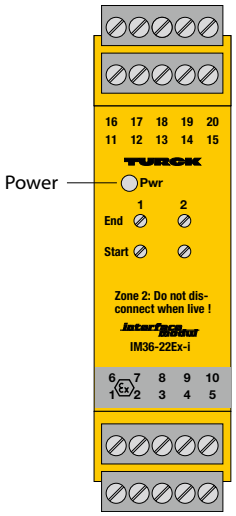

Technical data

Type	IM36-22EX-I
Ident no.	7509528

Power supply

Nominal voltage	Universal voltage supply unit
Operating voltage range	20…125 VDC
Operating voltage range	20…250 VAC
Frequency	40…70 Hz
Power consumption	≤ 2.2 W

Inputs

Input circuits	potentiometer
Cable resistance	≤ 50 Ω
Voltage on resistor	5 VDC
Nominal resistance	0.8…100 kΩ

Outputs

Output current	0/4…20 mA

Response characteristic

Rise time (10-90%)	≤ 35 ms
Dropout time (90…10%)	≤ 40 ms

Approvals and declarations

Ex approval acc. to conformity certificate	TÜV 12 ATEX 093477
Device designation	Ⓔx II (1) G, II (1) D [Ex ia Ga] IIC; [Ex ia Da] IIIC
Max. values:	Terminal connection: 1…5 / 6…10
Max. output voltage U_o	≤ 14.1 V
Max. output current I_o	≤ 40.6 mA
Max. output power P_o	≤ 143 mW
Characteristic	linear
Internal inductance/capacitance L_i/C_i	L_i = 87 µH; C_i = 15 nF

External inductance/capacitance L_o/C_o

Ex ia	IIC			IIB		
L_o [mH]	1	5	10	1	5	10
C_o [nF]	425	285	235	2400	1700	1500

Ex approval acc. to conformity certificate	TÜV 12 ATEX 093479 X
Application area	II 3 G
Protection type	Ex nA nC [ic Gc] IIC T4 Gc
Max. values:	Terminal connection: 1…5 / 6…10
Max.output voltage U_o	≤ 14.1 V
Max. output current I_o	≤ 40.6 mA
Max. output power P_o	≤ 143 mW
Characteristic	linear
Internal inductance/capacitance L_i/C_i	L_i = 87 µH; C_i = 15 nF

External inductance/capacitance L_o/C_o

Ex ic	IIC			IIB		
L_o [mH]	1	5	10	1	5	10
C_o [nF]	735	515	445	4300	3000	2700

Indication

Operational readiness	green

Environmental Conditions

Ambient temperature	-25…+70 °C
Storage temperature	-40…+80 °C
Test voltage	2.5 kV

Mechanical data

Tightening torque	0.5 Nm
Electrical connection	4 x 5-pin removable terminal blocks, reverse polarity protected, screw connection
Terminal cross-section	1 x 2.5 mm² / 2 x 1.5 mm²
Housing material	Polycarbonate/ABS
Mounting instruction	for DIN rail / panel
Protection class	IP20
Flammability class acc. to UL 94	V-0
Dimensions	27 x 104 x 110 mm

Approval | Certification	ATEX, IECEx, TR CU

Potentiometer amplifier, 2-channel

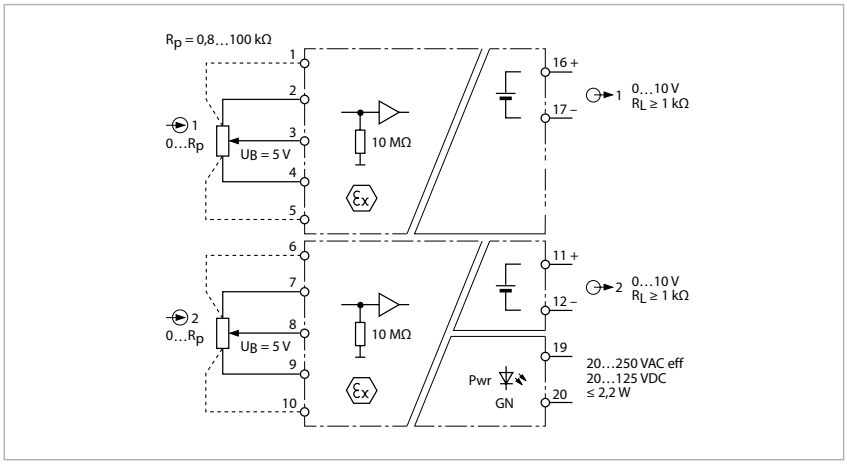

Features

- ATEX, IECEx, TR CU
- Installation in zone 2
- Transmission of potentiometer signals from the Ex area
- Potentiometer, nominal resistance: 0.8…100 kΩ
- Output circuit: 0…10 V
- Complete galvanic isolation

The 2-channel potentiometer amplifier IM36-22EX-U is designed to transmit signals from 3 or 5-wire potentiometers galvanically isolated from the Ex area to the non-Ex area and to convert them into normalized 0…10 V analog signals. The resistance value of the wiper contact is collected in a range between 0 Ω and the nominal resistance value (end value) of the potentiometer and converted into a linear value.

A potentiometer is defined by its nominal resistance. Any potentiometer can be connected, provided the nominal resistance is 800…100000 Ω. Common potentiometers featuring a nominal resistance of 1 kΩ or 10 kΩ can thus be used. The admissible line resistance is maximally 50 Ω with a potentiometer resistance of 800 Ω.

The incremental potentiometer's start and end point can be adjusted separately for each channel. This is necessary to protect the incremental potentiometer from damage which can be caused by critical rotation angles smaller than 5 % and greater than 95 % of the absolute rotational torque.

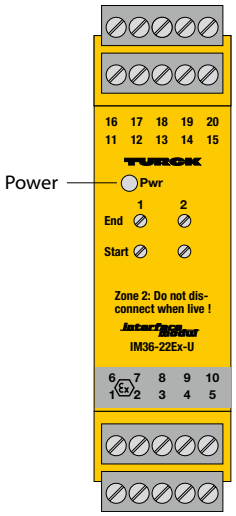

Technical data

Type	IM36-22EX-U
Ident no.	7509530

Power supply	
Nominal voltage	Universal voltage supply unit
Operating voltage range	20…125 VDC
Operating voltage range	20…250 VAC
Frequency	40…70 Hz
Power consumption	≤ 2.2 W

Inputs	
Input circuits	potentiometer
Cable resistance	≤ 50 Ω
Voltage on resistor	5 VDC
Nominal resistance	0.8…100 kΩ

Outputs	
Output voltage	0…10 V

Response characteristic	
Rise time (10-90%)	≤ 35 ms
Dropout time (90…10%)	≤ 40 ms

Approvals and declarations	
Ex approval acc. to conformity certificate	TÜV 12 ATEX 093477
Device designation	Ⓔx II (1) G, II (1) D [Ex ia Ga] IIC; [Ex ia Da] IIIC
Max. values:	Terminal connection: 1…5 / 6…10
Max. output voltage U_o	≤ 14.1 V
Max. output current I_o	≤ 40.6 mA
Max. output power P_o	≤ 143 mW
Characteristic	linear
Internal inductance/capacitance L_i/C_i	L_i = 87 µH; C_i = 15 nF

External inductance/capacitance L_o/C_o

Ex ia	IIC			IIB		
L_o [mH]	1	5	10	1	5	10
C_o [nF]	425	285	235	2400	1700	1500

Ex approval acc. to conformity certificate	TÜV 12 ATEX 093479 X
Application area	II 3 G
Protection type	Ex nA nC [ic Gc] IIC T4 Gc
Max. values:	Terminal connection: 1…5 / 6…10
Max.output voltage U_o	≤ 14.1 V
Max. output current I_o	≤ 40.6 mA
Max. output power P_o	≤ 143 mW
Characteristic	linear
Internal inductance/capacitance L_i/C_i	L_i = 87 µH; C_i = 15 nF

External inductance/capacitance L_o/C_o

Ex ic	IIC			IIB		
L_o [mH]	1	5	10	1	5	10
C_o [nF]	735	515	445	4300	3000	2700

Indication	
Operational readiness	green

Environmental Conditions	
Ambient temperature	-25…+70 °C
Storage temperature	-40…+80 °C
Test voltage	2.5 kV

Mechanical data	
Tightening torque	0.5 Nm
Electrical connection	4 x 5-pin removable terminal blocks, reverse polarity protected, screw connection
Terminal cross-section	1 x 2.5 mm² / 2 x 1.5 mm²
Housing material	Polycarbonate/ABS
Mounting instruction	for DIN rail / panel
Protection class	IP20
Flammability class acc. to UL 94	V-0
Dimensions	27 x 104 x 110 mm

Approval | Certification	ATEX, IECEx, TR CU

Trip amplifier, 1-channel

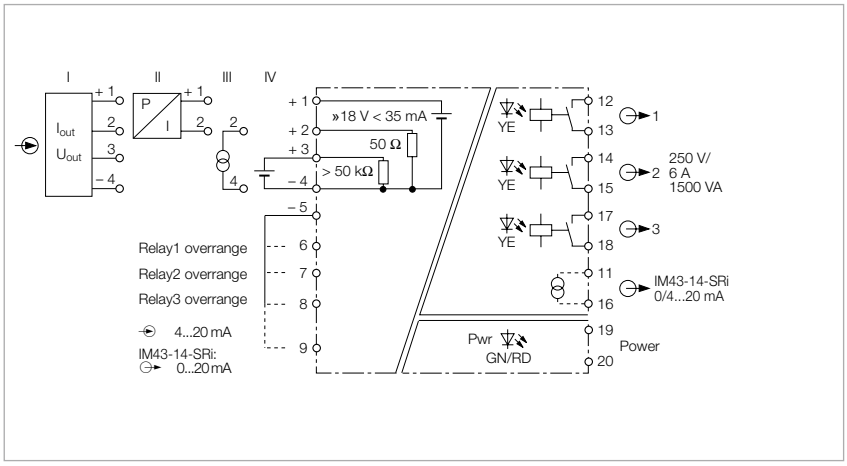

Features

- $_{C}FM_{US}$, TR CU
- Monitors 3 limit values at a current or voltage input
- Power supply of 2-wire or 3-wire transmitters/sensors
- Input circuit: 0/4…20 mA; 0/2…10 V
- Output circuit: 0/4…20 mA, 3 independent limit value relays
- Limit value relay adjusted via TEACH button
- Relay outputs adjusted via buttons on the front
- Universal operating voltage
- Complete galvanic isolation

The IM43-14-SRI 1-channel trip amplifier monitors 0/4…20 mA currents or 0/2…10 V voltages according to over/underrange of limit values.

The three limit values are set via teach buttons at the front.

Additionally 18 V (at max. 35 mA) are provided for transmitters or sensors.

The measured values are transmitted via a galvanically isolated analog output to other devices.

The green LED indicates operational readiness. Three yellow LEDs indicate the switching status of the corresponding output.

The output mode is adjusted via bridges at the terminals 5 to 8.

Live-zero signals are converted into dead-zero through bridging terminals 5/9. In live-zero mode the range between 4…20 mA is monitored. Any state outside this range (< 3.6 mA or > 24 mA) is signalled with an error message. In this case the power LED will illuminate red, the relays drop off and a fault current of > 22 mA is output. If a faulty transmitter causes a short circuit, the relays drop off and a fault current of > 22 mA is output.

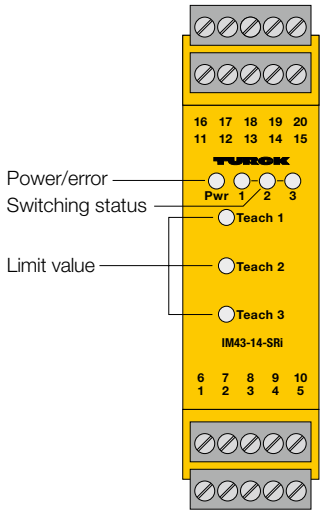

Output relay – Load curve

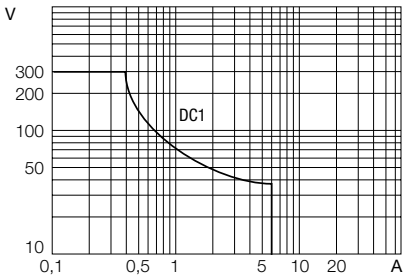

Output relay – Electrical lifetime

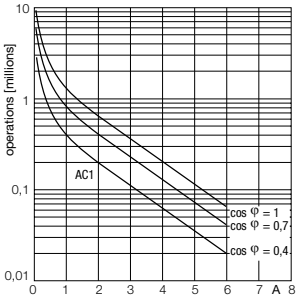

Technical data

Type	IM43-14-SRI
Ident no.	7540043

Power supply	
Nominal voltage	Universal voltage supply unit
Operating voltage range	20…250 VDC
Operating voltage range	20…250 VAC
Frequency	40…70 Hz
Power consumption	≤ 5 W

Inputs	
Supply voltage	≥ 17 V / 20 mA
Current	35 mA
Voltage input	0/2…10 VDC
Input resistance (voltage)	≥ 50 kΩ
Current input	0/4…20 mA
Input resistance (current)	≤ 50 Ω

Outputs	
Load resistance, current output	≤ 0.6 kΩ
Output current	0/4…20 mA
Output circuits (digital)	3 x relays (NO)
Switching frequency	≤ 10 Hz
Relay switching voltage	≤ 250 VAC/120 VDC
Switching current per output	≤ 6 A
Switching capacity per output	≤ 1500 VA
Contact quality	AgNi, 3µ Au

Response characteristic	
Measuring accuracy	≤ 0.1 % of full scale
Reference temperature	23 °C
Temperature drift	≤ 0.00075 % / K

Indication	
Operational readiness	green
Switching state	yellow
Error indication	red

Environmental Conditions	
Ambient temperature	-25…+70 °C
Storage temperature	-40…+80 °C
Test voltage	2.5 kV

Mechanical data	
Tightening torque	0.5 Nm
Electrical connection	4 x 5-pin removable terminal blocks, reverse polarity protected, screw connection
Terminal cross-section	1 x 2.5 mm² / 2 x 1.5 mm²
Housing material	Polycarbonate/ABS
Mounting instruction	for DIN rail / panel
Protection class	IP20
Flammability class acc. to UL 94	V-0
Dimensions	27 x 104 x 110 mm

Approval | Certification	$_{c}FM_{us}$, TR CU

Trip amplifier, 1-channel

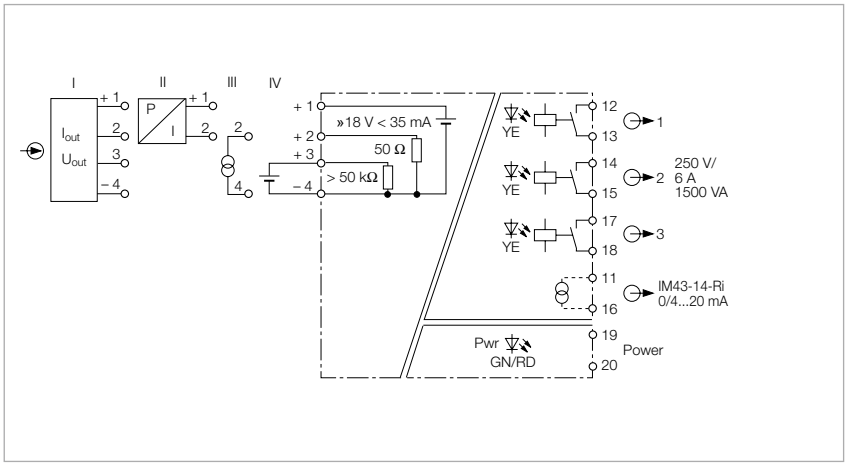

Features

- $_{C}FM_{US}$, TR CU
- Monitors 3 limit values at a current or voltage input
- Power supply of 2-wire or 3-wire transmitters/sensors
- Input circuit: 0/4…20 mA; 0/2…10 V
- Output circuit: 0/4…20 mA, 3 independent limit value relays
- Limit value relay adjusted via rotary coding switches
- Hysteresis and relay outputs adjusted via DIP switch
- Universal operating voltage
- Complete galvanic isolation

The IM43-14-RI 1-channel trip amplifier monitors 0/4…20 mA currents or 0/2…10 V voltages according to over/underrange of limit values.

The three limit values are set via the lateral rotary coding switches.

Additionally 18 V (at max. 35 mA) are provided for transmitters or sensors.
The measured values are transmitted via a galvanically isolated analog output to other devices.

The green LED indicates operational readiness. Three yellow LEDs indicate the switching status of the corresponding output.

The output mode of the relays and the hysteresis are set via DIP switches.

Live-zero signals are converted into dead-zero signals via DIP switches. In live-zero mode the range between 4…20 mA is monitored. Any state outside this range (< 3.6 mA or > 24 mA) is signalled with an error message. In this case the power LED will illuminate red, the relays drop off and a fault current is output. If a faulty transmitter causes a short circuit, the relays drop off and a fault current is also output. The fault current can be 0 mA or > 22 mA, depending on the DIP switch activated.

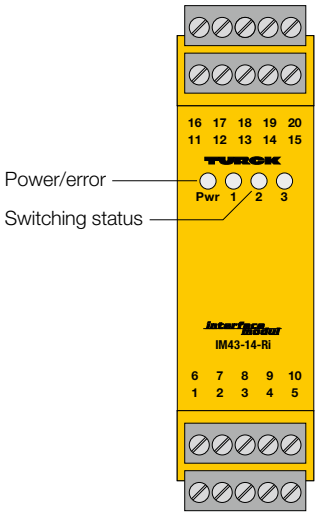

Output relay – Load curve

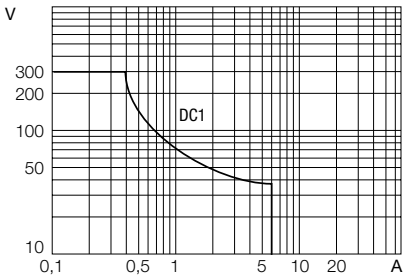

Output relay – Electrical lifetime

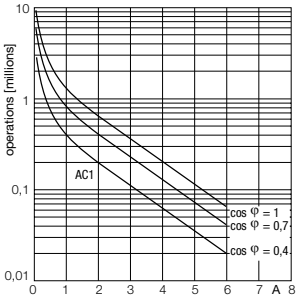

Technical data

Type	IM43-14-RI
Ident no.	7540042

Power supply	
Nominal voltage	Universal voltage supply unit
Operating voltage range	20…250 VDC
Operating voltage range	20…250 VAC
Frequency	40…70 Hz
Power consumption	≤ 5 W

Inputs	
Supply voltage	≥ 17 V / 20 mA
Current	35 mA
Voltage input	0/2…10 VDC
Input resistance (voltage)	≥ 50 kΩ
Current input	0/4…20 mA
Input resistance (current)	≤ 50 Ω

Outputs	
Load resistance, current output	≤ 0.6 kΩ
Output current	0/4…20 mA
Output circuits (digital)	3 x relays (NO)
Switching frequency	≤ 10 Hz
Relay switching voltage	≤ 250 VAC/120 VDC
Switching current per output	≤ 6 A
Switching capacity per output	≤ 1500 VA
Contact quality	AgNi, 3µ Au

Response characteristic	
Measuring accuracy	≤ 0.1 % of full scale
Reference temperature	23 °C
Temperature drift	≤ 0.00075 % / K

Indication	
Operational readiness	green
Switching state	yellow
Error indication	red

Environmental Conditions	
Ambient temperature	-25…+70 °C
Storage temperature	-40…+80 °C
Test voltage	2.5 kV

Mechanical data	
Tightening torque	0.5 Nm
Electrical connection	4 x 5-pin removable terminal blocks, reverse polarity protected, screw connection
Terminal cross-section	1 x 2.5 mm² / 2 x 1.5 mm²
Housing material	Polycarbonate/ABS
Mounting instruction	for DIN rail / panel
Protection class	IP20
Flammability class acc. to UL 94	V-0
Dimensions	27 x 104 x 110 mm

Approval | Certification	$_{c}FM_{us}$, TR CU

Trip amplifier, 1-channel

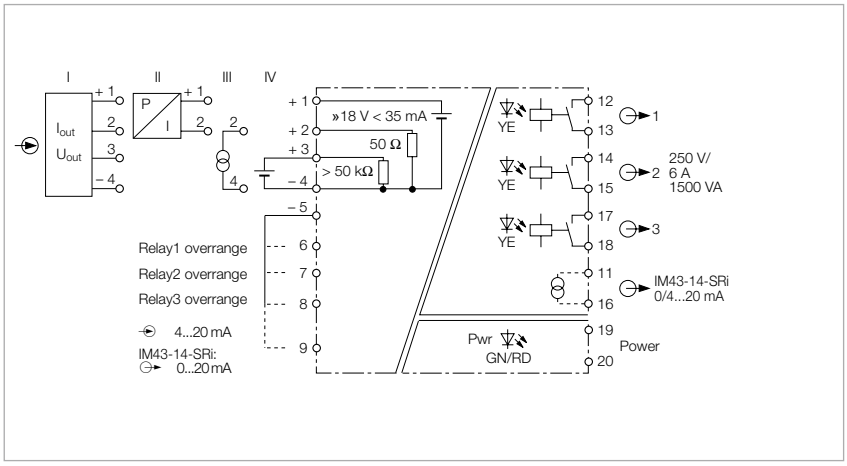

Features

- $_{C}FM_{US}$, TR CU
- Monitors 3 limit values at a current or voltage input
- Power supply of 2-wire or 3-wire transmitters/sensors
- Input circuit: 0/4…20 mA; 0/2…10 V
- Output circuit: 3 independent limit value relays
- Limit value relay adjusted via Teach button
- Relay outputs adjusted via buttons on the front
- Universal operating voltage
- Complete galvanic isolation

The IM43-13-SR 1-channel trip amplifier monitors 0/4…20 mA currents or 0/2…10 V voltages according to over/underrange of limit values.

The three limit values are set via teach buttons at the front.

Additionally, 18 V (with max. 35 mA) are provided for transmitters or sensors.

The green LED indicates operational readiness. Three yellow LEDs indicate the switching status of the corresponding output.

The output mode is adjusted via bridges at the terminals 5 to 8.

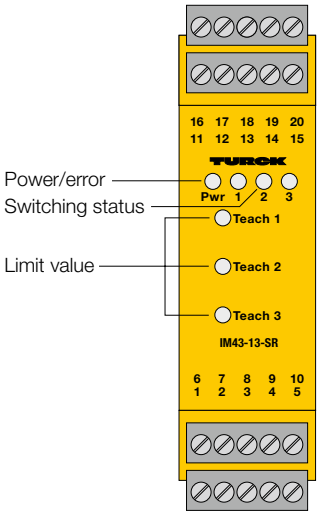

Output relay – Load curve

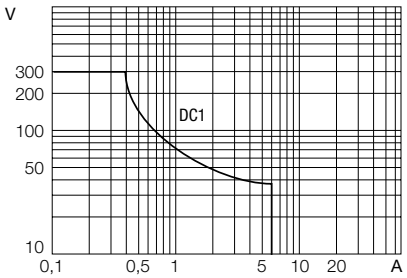

Output relay – Electrical lifetime

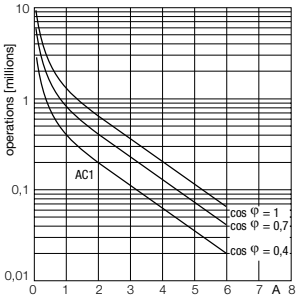

Technical data

Type	IM43-13-SR
Ident no.	7540041
Power supply	
Nominal voltage	Universal voltage supply unit
Operating voltage range	20…250 VDC
Operating voltage range	20…250 VAC
Frequency	40…70 Hz
Power consumption	≤ 5 W
Inputs	
Supply voltage	≥ 17 V / 20 mA
Current	35 mA
Voltage input	0/2…10 VDC
Input resistance (voltage)	≥ 50 kΩ
Current input	0/4…20 mA
Input resistance (current)	≤ 50 Ω
Outputs	
Output circuits (digital)	3 x relays (NO)
Switching frequency	≤ 10 Hz
Relay switching voltage	≤ 250 VAC/120 VDC
Switching current per output	≤ 6 A
Switching capacity per output	≤ 1500 VA
Contact quality	AgNi, 3µ Au
Response characteristic	
Reference temperature	23 °C
Temperature drift	≤ 0.00075 % / K
Indication	
Operational readiness	green
Switching state	yellow
Error indication	red
Environmental Conditions	
Ambient temperature	-25…+70 °C
Storage temperature	-40…+80 °C
Test voltage	2.5 kV
Mechanical data	
Tightening torque	0.5 Nm
Electrical connection	4 x 5-pin removable terminal blocks, reverse polarity protected, screw connection
Terminal cross-section	1 x 2.5 mm² / 2 x 1.5 mm²
Housing material	Polycarbonate/ABS
Mounting instruction	for DIN rail / panel
Protection class	IP20
Flammability class acc. to UL 94	V-0
Dimensions	27 x 104 x 110 mm
Approval | Certification	$_{c}FM_{us}$, TR CU

Trip amplifier, 1-channel

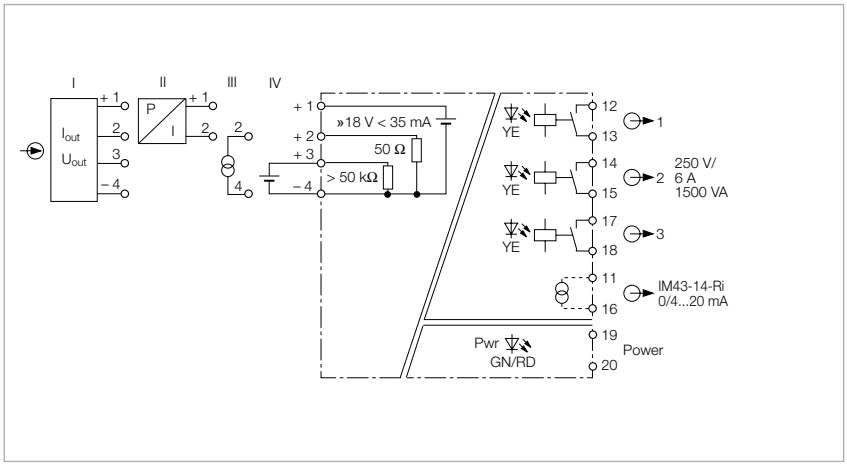

Features

- $_{C}FM_{US}$, TR CU
- Monitors 3 limit values at a current or voltage input
- Power supply of 2-wire or 3-wire transmitters/sensors
- Input circuit: 0/4…20 mA; 0/2…10 V
- Output circuit: 3 independent limit value relays
- Limit value relay adjusted via rotary coding switches
- Hysteresis and relay outputs adjusted via DIP switch
- Universal operating voltage
- Complete galvanic isolation

The IM43-13-R 1-channel trip amplifier monitors 0/4…20 mA currents or 0/2…10 V voltages according to over/underrange of limit values.

The three limit values are set via the lateral rotary coding switches.

Additionally, 18 V (with max. 35 mA) are provided for transmitters or sensors.

The green LED indicates operational readiness. Three yellow LEDs indicate the switching status of the corresponding output.

The output mode of the relays and the hysteresis are set via DIP switches.

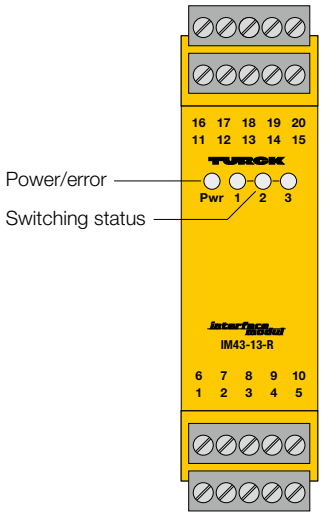

Output relay – Load curve

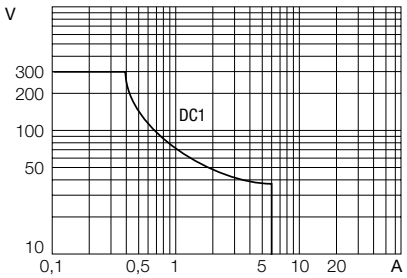

Output relay – Electrical lifetime

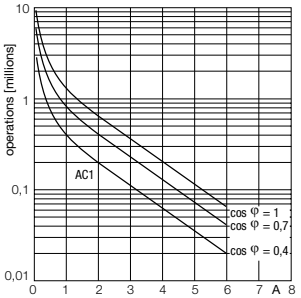

Technical data

Type	IM43-13-R
Ident no.	7540040
Power supply	
Nominal voltage	Universal voltage supply unit
Operating voltage range	20…250 VDC
Operating voltage range	20…250 VAC
Frequency	40…70 Hz
Power consumption	≤ 5 W
Inputs	
Supply voltage	≥ 17 V / 20 mA
Current	35 mA
Voltage input	0/2…10 VDC
Input resistance (voltage)	≥ 50 kΩ
Current input	0/4…20 mA
Input resistance (current)	≤ 50 Ω
Outputs	
Output circuits (digital)	3 x relays (NO)
Switching frequency	≤ 10 Hz
Relay switching voltage	≤ 250 VAC/120 VDC
Switching current per output	≤ 6 A
Switching capacity per output	≤ 1500 VA
Contact quality	AgNi, 3µ Au
Response characteristic	
Reference temperature	23 °C
Temperature drift	≤ 0.00075 % / K
Indication	
Operational readiness	green
Switching state	yellow
Error indication	red
Environmental Conditions	
Ambient temperature	-25…+70 °C
Storage temperature	-40…+80 °C
Test voltage	2.5 kV
Mechanical data	
Tightening torque	0.5 Nm
Electrical connection	4 x 5-pin removable terminal blocks, reverse polarity protected, screw connection
Terminal cross-section	1 x 2.5 mm² / 2 x 1.5 mm²
Housing material	Polycarbonate/ABS
Mounting instruction	for DIN rail / panel
Protection class	IP20
Flammability class acc. to UL 94	V-0
Dimensions	27 x 104 x 110 mm
Approval | Certification	$_{c}FM_{us}$, TR CU

Trip amplifier, 1-channel

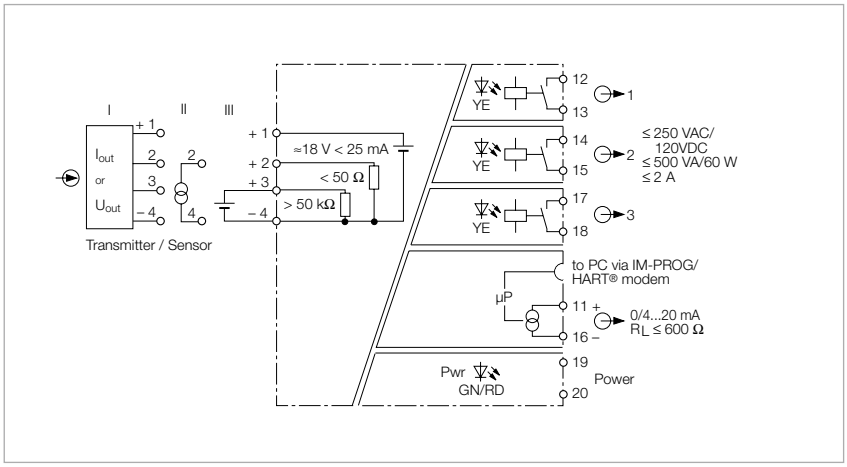

Features

- TR CU
- Input circuit: 0/4…20 mA; 0/2…10 V
- Output circuit: 0/4…20 mA, 3 independent limit value relays
- Universal operating voltage
- Monitors over and underrange of limit values and window limits
- Connection of passive 2-wire and active 3-wire transmitters
- Parametrized via PC (FDT/DTM), front-panel switch and HART®
- Many diagnostic functions
- Ring buffer for up to 8000 measured values
- Display
- Complete galvanic isolation

The 1-channel trip amplifier IM43-14-CDRI is designed to operate 2-wire transducers (III) and to galvanically isolate and transmit the measured signals. Alternatively, active 2-wire transmitters (II) and passive 3-wire transmitters (I) can also be operated.

The three limit values are set via teach buttons at the front.

The device features one output for analog signals 0/4…20 mA and three outputs for limit value relays. The unit of the measured value is freely selectable and indicated on a 2-line display. A green LED indicates operational readiness, 3 yellow LEDs indicate the switching status of the individual channels.

At each of the three outputs a predefined setpoint value can be monitored according to overshoot/undershoot. The switching hysteresis is defined by programming the switch-on and switch-off point. Furthermore, a switch-off delay can be set individually for each output.

The measured value is permanently written to a ring buffer with space for 8000 values. The writing process is stopped with a predefined trigger event, like for example “excess of limit value“. After that, the stored signal sequence can be read out.

The device can be parametrized and configured via PC (FDT/DTM). For this, connect the device to the PC via the 3.5 mm jack on the front (the matching transmission cable IM-PROG III can be ordered separately from TURCK). A basic scope of parameters can be set via buttons and display on the front or remotely via the current interface and HART®.

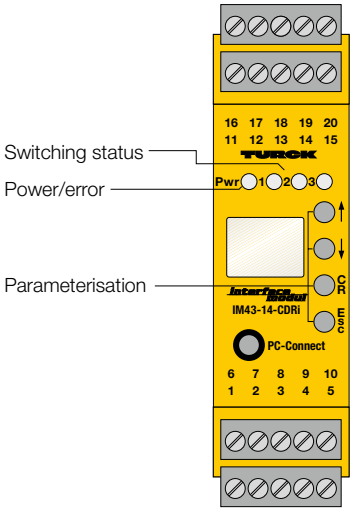

Output relay – Load curve

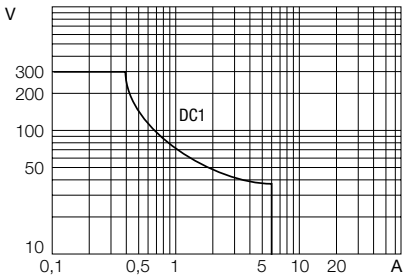

Output relay – Electrical lifetime

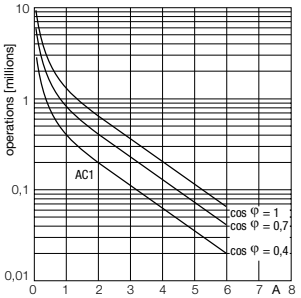

Technical data

Type	IM43-14-CDRI
Ident no.	7540045
Power supply	
Nominal voltage	Universal voltage supply unit
Operating voltage range	20…250 VDC
Operating voltage range	20…250 VAC
Frequency	40…70 Hz
Power consumption	≤ 3 W
Residual ripple	≤ 10 mV_{ss}
Inputs	
Supply voltage	≥ 17 V / 20 mA
Current	25 mA
Voltage input	0/2…10 VDC
Current input	0/4…20 mA
Outputs	
Output current	0/4…20 mA
Output circuits (digital)	3 x relays (NO)
Switching frequency	≤ 10 Hz
Relay switching voltage	≤ 250 VAC/120 VDC
Switching current per output	≤ 2 A
Switching capacity per output	≤ 500 VA/60 W
Fault current	0 / 22 mA adjustable
Contact quality	AgNi, 3µ Au
Response characteristic	
Measuring accuracy	≤ 0.05 % of full scale
Reference temperature	23 °C
Temperature drift analogue output	0.0025 %/K
Indication	
Operational readiness	green
Switching state	yellow
Error indication	red
Environmental Conditions	
Ambient temperature	-25…+70 °C
Storage temperature	-40…+80 °C
Test voltage	2.5 kV
Mechanical data	
Tightening torque	0.5 Nm
Electrical connection	4 x 5-pin removable terminal blocks, reverse polarity protected, screw connection
Terminal cross-section	1 x 2.5 mm^2 / 2 x 1.5 mm^2
Housing material	Polycarbonate/ABS
Mounting instruction	for DIN rail / panel
Protection class	IP20
Flammability class acc. to UL 94	V-0
Dimensions	27 x 104 x 110 mm
Approval | Certification	TR CU

Solonoid driver, 1-channel

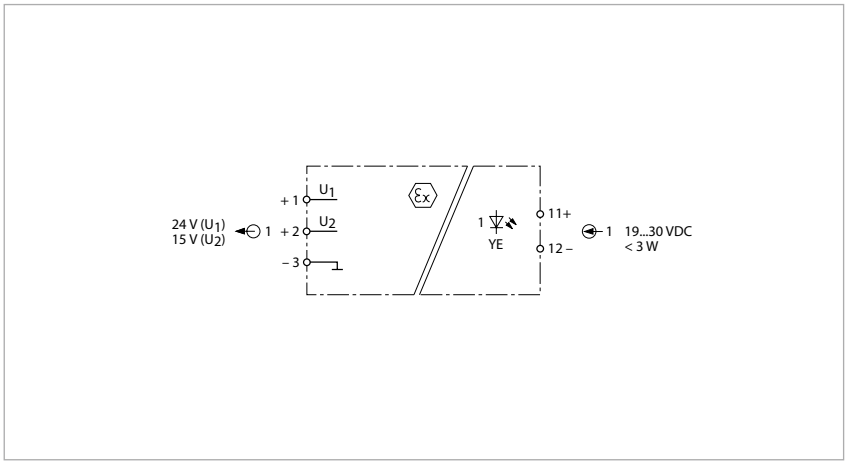

Features

- ATEX, IECEx, UL, $_{C}FM_{US}$ TR CU, NEPSI, INMETRO
- Installation in zone 2
- Voltage input max. 30 VDC
- Voltage outuput 15 VDC resp. 24 VDC
- Output current ≤ 40 mA
- Switching frequency ≤ 500 Hz
- SIL3
- Removable terminal blocks
- Galvanic isolation between input circuits and output circuits

The 1-channel solonoid driver IM72-11EX/L provides intrinsically safe limited power at the output. This enables them to be used directly for supplying loads in the Ex area.

Within the area of applicability of the European directive 94/9/EC (ATEX) it is permitted to operate connected loads in potentially explosive atmospheres caused by dust or gas, provided they comply with the applicable regulations.

Typical applications are the control of Exi pilot valves as well as the supply of displays and transmitters. The output values of the two connections U1 and U2 per channel differ in terms of their no-load voltage and are adapted to the valves of different manufacturers (see output curve on next page).

The loads are actuated by applying the operating voltage.

A yellow LED indicates the switching state of the associated output.

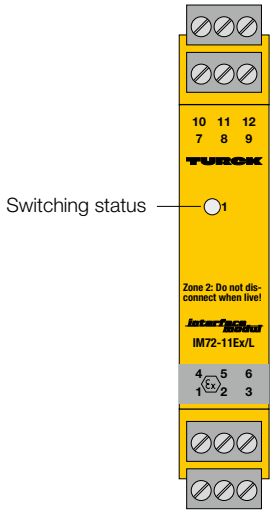

Technical data

Type	IM72-11EX/L
Ident no.	7520703

Power supply

Nominal voltage	24 VDC loop-powered
Power consumption	≤ 1.5 W

Inputs

0-signal	0…5 VDC
1-signal	19…30 VDC
Voltage input	max. 30 VDC
Current input	45 mA
Input delay	≤ 2 ms

Outputs

Output circuits	intrinsically safe acc. to EN 60079
Output current	40 mA
Output voltage	U1=24 V
Output voltage	U2=15 V
Output curve	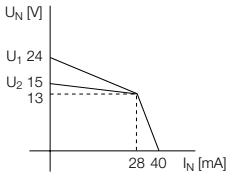

Response characteristic

Limit frequency	≤ 500 Hz

Approvals and declarations

Ex approval acc. to conformity certificate	TÜV 05 ATEX 2846 X
Device designation	II (1) GD [EEx ia] IIC
Max. values:	Terminal connection: 1+3
Max. output voltage U_o	≤ 27 V
Max. output current I_o	≤ 96 mA
Max. output power P_o	≤ 678 mW
Rated voltage	250 V
Characteristic	Trapezoidal
Internal inductance/capacitance L_i/C_i	negligibly small

External inductance/capacitance L_o/C_o

EEx ia	IIC		IIB	
L_o [mH]	0.68	0.5	13	2
C_o [nF]	62	70	260	300

Max. values:	Terminal connection: 2+3
Max. output voltage U_o	≤ 17.6 V
Max. output current I_o	≤ 96 mA
Max. output power P_o	≤ 678 mW
Characteristic	trapezoidal
Internal inductance/capacitance L_i/C_i	negligibly small

External inductance/capacitance L_o/C_o

EEx ia	IIC		IIB	
L_o [mH]	1.2	0.5	13.0	2.0
C_o [µF]	0.13	0.15	0.47	1.1

Ex approval acc. to conformity certificate	TÜV 06 ATEX 553388 X
Application area	II 3 G
Protection type	Ex nA [nL] IIC/IIB T4
Max. values:	Terminal connection: 1+3
Max.output voltage U_o	≤ 27 V
Max. output current I_o	≤ 96 mA
Max. output power P_o	≤ 678 mW
Characteristic	trapezoidal
Internal inductance/capacitance L_i/C_i	negligibly small

External inductance/capacitance L_o/C_o

Ex nL	IIC		IIB	
L_o [mH]	0.68	0.5	13	2
C_o [nF]	120	130	570	620

Max. values:	Terminal connection: 2+3
Max.output voltage U_o	≤ 17.6 V
Max. output current I_o	≤ 96 mA
Max. output power P_o	≤ 678 mW
Characteristic	trapezoidal
Internal inductance/capacitance L_i/C_i	negligibly small

External inductance/capacitance L_o/C_o

Ex nL	IIC		IIB	
L_o [mH]	1.2	0.5	13	2.0
C_o [µF]	0.37	0.42	1	2.1

Declaration	SIL 3 acc. to EXIDA FMEDA

Indication

Switching state	yellow

Environmental Conditions

Ambient temperature	-25…+70 °C
Storage temperature	-40…+80 °C
Test voltage	2.5 kV

Mechanical data

Tightening torque	0.5 Nm
Electrical connection	4 x 3-pin removable terminal blocks, reverse polarity protected, screw connection
Terminal cross-section	1 x 2.5 mm² / 2 x 1.5 mm²
Housing material	Polycarbonate/ABS
Mounting instruction	for DIN rail / panel
Protection class	IP20
Flammability class acc. to UL 94	V-0
Dimensions	18 x 104 x 110 mm

Approval | Certification	ATEX, IECEx, UL, cFM$_{us}$, TR CU, NEPSI, INMETRO

Solonoid driver, 2-channel

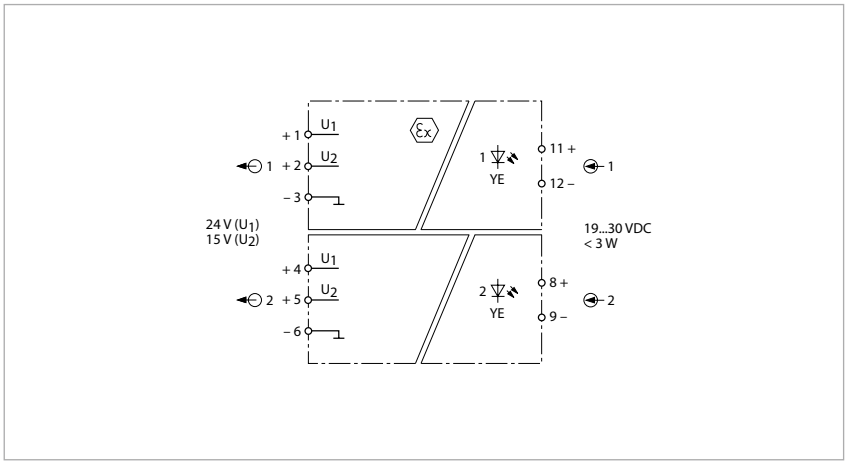

Features

- ATEX, IECEx, UL, $_{C}FM_{US}$ TR CU, NEPSI, INMETRO
- Installation in zone 2
- Voltage input max. 30 VDC
- Voltage outuput 15 VDC resp. 24 VDC
- Output current ≤ 40 mA
- Switching frequency ≤ 500 Hz
- SIL3
- Removable terminal blocks
- Galvanic isolation between input and output circuits

The 1-channel solonoid driver IM72-22EX/L provides intrinsically safe limited power at the output. This enables them to be used directly for supplying loads in the Ex area.

Within the area of applicability of the European directive 94/9/EC (ATEX) it is permitted to operate connected loads in potentially explosive atmospheres caused by dust or gas, provided they comply with the applicable regulations.

Typical applications are the control of Exi pilot valves as well as the supply of displays and transmitters. The output values of the two connections U1 and U2 per channel differ in terms of their no-load voltage and are adapted to the valves of different manufacturers (see output curve on next page).

The loads are actuated by applying the operating voltage.

A yellow LED indicates the switching state of the associated output.

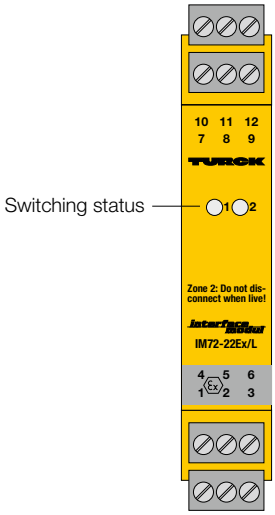

Technical data

Type	IM72-22EX/L
Ident no.	7520702

Power supply

Nominal voltage	24 VDC loop-powered
Power consumption	≤ 2.2 W

Inputs

0-signal	0…5 VDC
1-signal	19…30 VDC
Voltage input	max. 30 VDC
Current input	45 mA
Input delay	≤ 2 ms

Outputs

Output circuits	intrinsically safe acc. to EN 60079
Output current	40 mA
Output voltage	U1=24 V
Output voltage	U2=15 V
Output curve	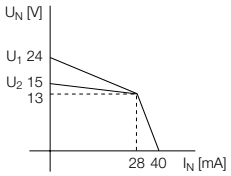

Response characteristic

Limit frequency	≤ 500 Hz

Approvals and declarations

Ex approval acc. to conformity certificate	TÜV 05 ATEX 2846 X
Device designation	II (1) GD [EEx ia] IIC
Max. values:	Terminal connection: 1+3 / 4+6
Max. output voltage U_o	≤ 27 V
Max. output current I_o	≤ 96 mA
Max. output power P_o	≤ 678 mW
Rated voltage	250 V
Characteristic	Trapezoidal
Internal inductance/capacitance L_i/C_i	negligibly small

External inductance/capacitance L_o/C_o

EEx ia	IIC		IIB	
L_o [mH]	0.68	0.5	13	2
C_o [nF]	62	70	260	300

Max. values:	Terminal connection: 2+3 / 5+6
Max. output voltage U_o	≤ 17.6 V
Max. output current I_o	≤ 96 mA
Max. output power P_o	≤ 678 mW
Characteristic	trapezoidal
Internal inductance/capacitance L_i/C_i	negligibly small

External inductance/capacitance L_o/C_o

EEx ia	IIC		IIB	
L_o [mH]	1.2	0.5	13.0	2.0
C_o [µF]	0.13	0.15	0.47	1.1

Ex approval acc. to conformity certificate	TÜV 06 ATEX 553388 X
Application area	II 3 G
Protection type	Ex nA [nL] IIC/IIB T4
Max. values:	Terminal connection: 1+3 / 4+6
Max.output voltage U_o	≤ 27 V
Max. output current I_o	≤ 96 mA
Max. output power P_o	≤ 678 mW
Characteristic	trapezoidal
Internal inductance/capacitance L_i/C_i	negligibly small

External inductance/capacitance L_o/C_o

Ex nL	IIC		IIB	
L_o [mH]	0.68	0.5	13	2
C_o [nF]	120	130	570	620

Max. values:	Terminal connection: 2+3 / 5+6
Max.output voltage U_o	≤ 17.6 V
Max. output current I_o	≤ 96 mA
Max. output power P_o	≤ 678 mW
Characteristic	trapezoidal
Internal inductance/capacitance L_i/C_i	negligibly small

External inductance/capacitance L_o/C_o

Ex nL	IIC		IIB	
L_o [mH]	1.2	0.5	13	2.0
C_o [µF]	0.37	0.42	1	2.1

Declaration	SIL 3 acc. to EXIDA FMEDA

Indication

Switching state	yellow

Environmental Conditions

Ambient temperature	-25…+70 °C
Storage temperature	-40…+80 °C
Test voltage	2.5 kV

Mechanical data

Tightening torque	0.5 Nm
Electrical connection	4 x 3-pin removable terminal blocks, reverse polarity protected, screw connection
Terminal cross-section	1 x 2.5 mm² / 2 x 1.5 mm²
Housing material	Polycarbonate/ABS
Mounting instruction	for DIN rail / panel
Protection class	IP20
Flammability class acc. to UL 94	V-0
Dimensions	18 x 104 x 110 mm

Approval | Certification	ATEX, IECEx, UL, cFM$_{us}$, TR CU, NEPSI, INMETRO

Relay coupler, 1-channel

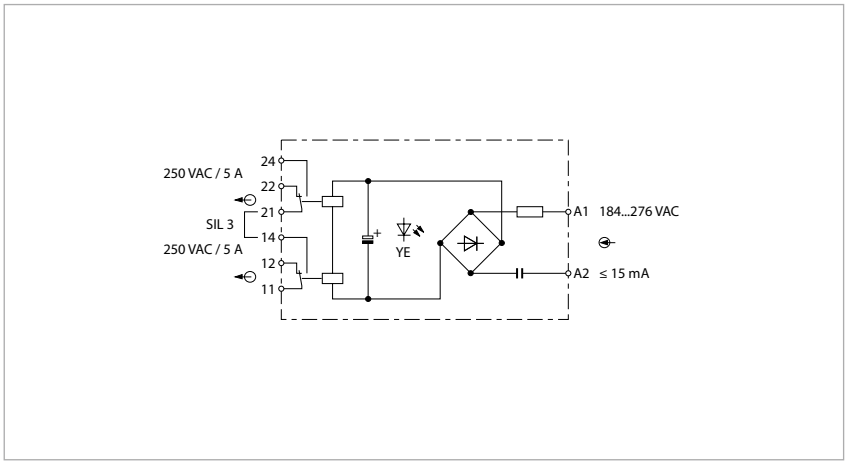

Features

- TR CU
- Output circuit: 2 relays each with 1 changeover contact
- 5 A switching current at 250 VAC
- Operating voltage 184…276 VDC
- SIL3
- Galvanic isolation between input circuits and output circuits

The IM73-12-R/230VAC 1-channel relay coupler is particularly suitable for use as a coupling module for the safe galvanic isolation of binary signals. 2 synchronous controlled relays, each with 1 changeover contact are provided at the output.

If applied in SIL-3 circuits, the following conditions have to be observed:

- If the output relay triggers a contactor directly, the contactor must be equipped with a protective circuitry at the coil connection.
- Both relays have to be connected in series.
- The contact circuit is equipped with a fuse and is activated at 60 % nominal current.

The status of the relay is indicated via LED on the front.

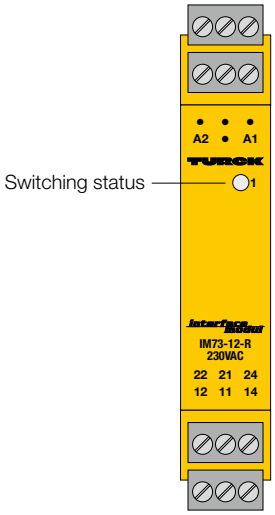

Output relay – Load curve

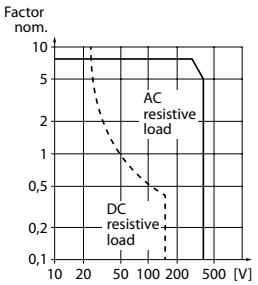

Hans Turck GmbH & Co. KG ▪ Tel. +49 208 49 52-0 ▪ Fax +49 208 49 52-264

Technical data

Type	IM73-12-R/230VAC
Ident no.	7520511
Power supply	
Nominal voltage	230 VAC
Operating voltage range	184…276 VAC
Frequency	48…62 Hz
Power consumption	≤ 3.5 VA
Inputs	
Current input	15 mA
Outputs	
Output circuits (digital)	2 x relay (change-over)
Switching frequency	≤ 5 Hz
Relay switching voltage	≤ 250 VAC
Switching current per output	≤ 5 A
Switching capacity per output	≤ 2000 VA/180 W
Contact quality	AgNi, 3µ Au
Approvals and declarations	
Declaration	SIL 3 acc. to EXIDA FMEDA
Indication	
Switching state	yellow
Environmental Conditions	
Ambient temperature	-25…+70 °C
Storage temperature	-40…+80 °C
Test voltage	2.5 kV
MTTF	947 years acc. to SN 29500 (Ed. 99) 40 °C
Mechanical data	
Tightening torque	0.5 Nm
Electrical connection	4 x 3-pin removable terminal blocks, reverse polarity protected, screw connection
Terminal cross-section	1 x 2.5 mm² / 2 x 1.5 mm²
Housing material	Polycarbonate/ABS
Mounting instruction	for DIN rail / panel
Protection class	IP20
Flammability class acc. to UL 94	V-0
Dimensions	18 x 104 x 110 mm
Approval | Certification	TR CU

Relay coupler, 1-channel

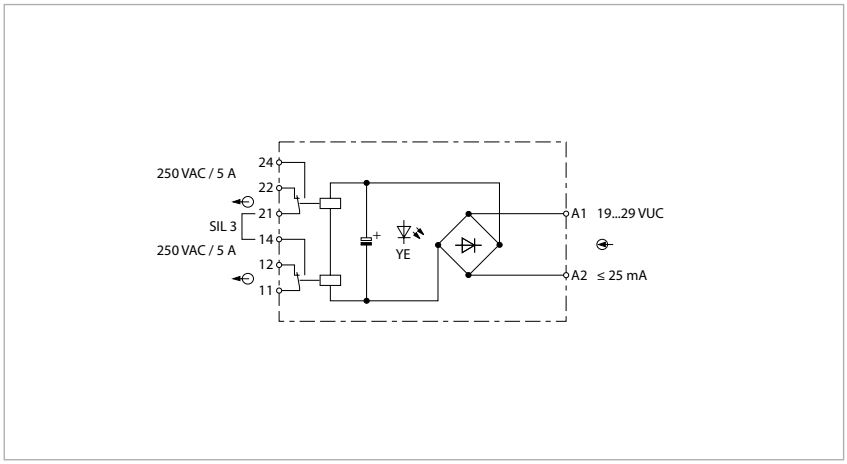

Features

- TR CU
- Output circuit: 2 relays each with 1 changeover contact
- 5 A switching current at 250 VAC
- Operating voltage 19…29 VDC
- Removable terminal blocks
- SIL3
- Galvanic isolation between input circuits and output circuits

The IM73-12-R/24VUC 1-channel relay coupler is particularly suitable for use as a coupling module for the safe galvanic isolation of binary signals. 2 synchronous controlled relays, each with 1 changeover contact are provided at the output.

If applied in SIL-3 circuits, the following conditions have to be observed:

- If the output relay triggers a contactor directly, the contactor must be equipped with a protective circuitry at the coil connection.
- Both relays have to be connected in series.
- The contact circuit is equipped with a fuse and is activated at 60 % nominal current.

The status of the relay is indicated via LED on the front.

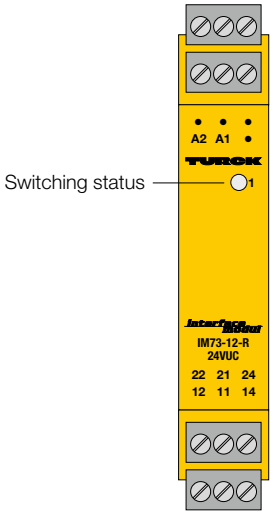

Load curve

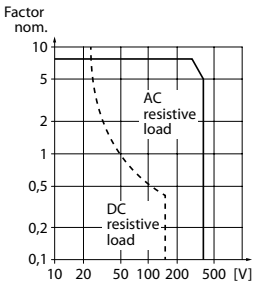

Hans Turck GmbH & Co. KG ▪ Tel. +49 208 49 52-0 ▪ Fax +49 208 49 52-264

Technical data

Type	IM73-12-R/24VUC
Ident no.	7520712
Power supply	
Nominal voltage	24 VUC
Operating voltage range	19…29 VDC
Operating voltage range	19…29 VAC
Frequency	48…62 Hz
Power consumption	≤ 0.6 VA
Inputs	
Voltage input	19…29 VAC/ VDC
Current input	25 mA
Outputs	
Output circuits (digital)	2 x relay (change-over)
Switching frequency	≤ 5 Hz
Relay switching voltage	≤ 250 VAC
Switching current per output	≤ 5 A
Switching capacity per output	≤ 2000 VA/180 W
Contact quality	AgNi, 3µ Au
Approvals and declarations	
Declaration	SIL 3 acc. to EXIDA FMEDA
Indication	
Switching state	yellow
Environmental Conditions	
Ambient temperature	-25…+70 °C
Storage temperature	-40…+80 °C
Test voltage	2.5 kV
MTTF	963 years acc. to SN 29500 (Ed. 99) 40 °C
Mechanical data	
Tightening torque	0.5 Nm
Electrical connection	4 x 3-pin removable terminal blocks, reverse polarity protected, screw connection
Terminal cross-section	1 x 2.5 mm² / 2 x 1.5 mm²
Housing material	Polycarbonate/ABS
Mounting instruction	for DIN rail / panel
Protection class	IP20
Flammability class acc. to UL 94	V-0
Dimensions	18 x 104 x 110 mm
Approval | Certification	TR CU

Relay coupler, 2-channel

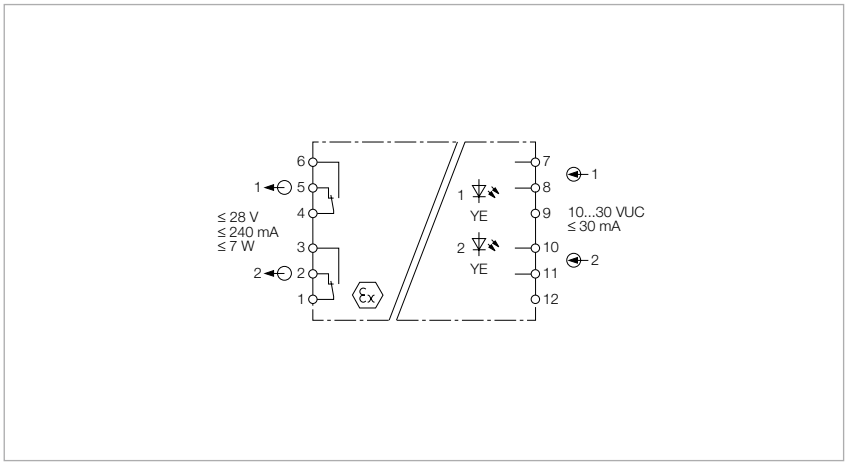

Features

- ATEX, TR CU
- Installation in zone 2
- Relay coupler for switching of intrinsically safe and current limited circuits
- High-quality reed relays with rhodium contacts
- Switching frequency up to 50 Hz
- Galvanic isolation between input and output circuits

The 2-channel relay coupler IM73-22Ex-R/24VUC is used for the switching of intrinsically safe circuits and for galvanically isolating contact and control circuitry according to EN 60079-11.

LEDs on the front indicate the switching status.

With 50 Hz the switching frequency of the reed relay is significantly higher than that of standard relays.

The reed relay with Rhodium contacts are also suitable for general control tasks, especially if normal relays reach their limits in terms of switching frequency and the permissible contact data.

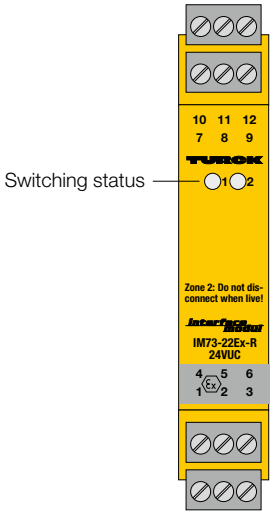

Technical data

Type	IM73-22Ex-R/24VUC
Ident no.	7520513
Power supply	
Nominal voltage	24 VUC
Operating voltage range	10…30 VDC
Operating voltage range	10…30 VAC
Frequency	48…62 Hz
Inputs	
Voltage input	10…30 VAC/ VDC
Current input	30 mA
Outputs	
Output circuits (digital)	2 x relay (change-over)
Relay switching voltage	≤ 28 VDC
Switching current per output	≤ 240 mA
Switching capacity per output	≤ 7 W
Contact quality	AgNi, 3µ Au
Response characteristic	
Limit frequency	≤ 50 Hz
Approvals and declarations	
Ex approval acc. to conformity certificate	BVS 03 ATEX E 335
Device designation	Ⓔx II (1) G, II (1) D [Ex ia Ga] IIC; [Ex ia Da] IIIC
Rated voltage	250 V
Max. values:	Terminal connection: 1…3 / 4…6
Max. input voltage U_i	≤ 28 V
Max. input current I_i	≤ 240 mA
Max. input power P_i	≤ 7000 mW
Internal inductance/capacitance L_i/C_i	negligibly small
Ex approval acc. to conformity certificate	Turck Ex-06007M X
Application area	II 3 G
Protection type	Ex nA nC [ic Gc] IIC T4 Gc
Max. values:	Terminal connection: 1…3 / 4…6
Max. input voltage U_i	≤ 28 V
Max. input current I_i	≤ 240 mA
Max. input power P_i	≤ 7000 mW
Internal inductance/capacitance L_i/C_i	negligibly small
Indication	
Switching state	yellow
Environmental Conditions	
Ambient temperature	-25…+70 °C
Storage temperature	-40…+80 °C
Test voltage	1.5 kV
Mechanical data	
Tightening torque	0.5 Nm
Electrical connection	4 x 3-pin removable terminal blocks, reverse polarity protected, screw connection
Terminal cross-section	1 x 2.5 mm² / 2 x 1.5 mm²
Housing material	Polycarbonate/ABS
Mounting instruction	for DIN rail / panel
Protection class	IP20
Flammability class acc. to UL 94	V-0
Dimensions	18 x 104 x 110 mm
Approval | Certification	ATEX, TR CU

Power supply

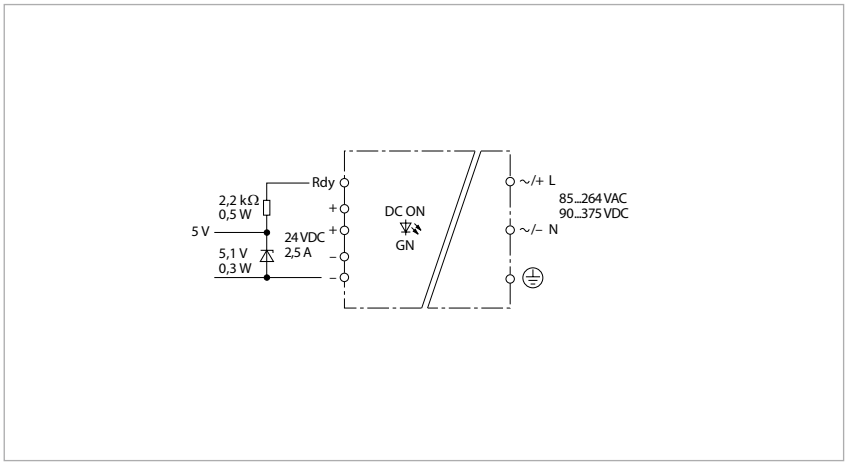

Features

- Safety extra-low voltage SELV IEC/ EN 60950
- Output voltage adjustable 24…28 VDC
- Nominal current 2.5 A
- Single/parallel operating mode
- Surge protection
- Mains buffering up to 30 ms
- Power-good relay

The IM82-24-2.5 power supply units are designed for DC loads, particularly the switching and monitoring devices of the TURCK IM, IME, IMS and IMC interface module series.

The power supply provides 24 VDC output voltage and 2.5 A output current. The output voltage is adjusted in a range between 24…28 VDC with the potentiometer V_{out}. The device provides safety extra-low voltage (SELV) according to EN 60950.

The power supply can be set to single or parallel operating mode (with decoupling diode).

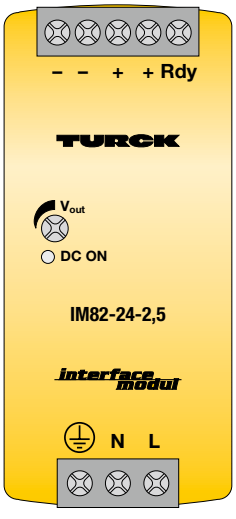

Derating

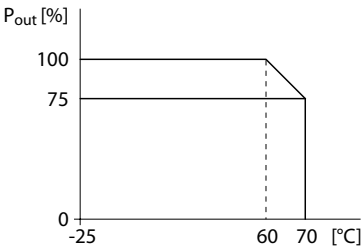

Short-circuit behaviour

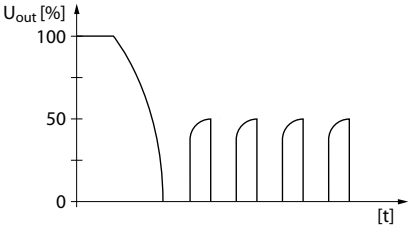

Parallel operation

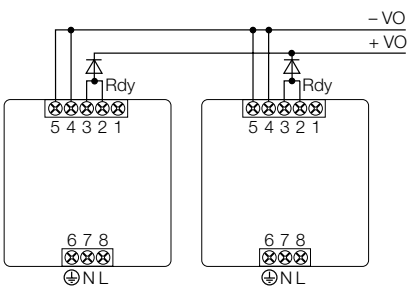

Hans Turck GmbH & Co. KG ▪ Tel. +49 208 49 52-0 ▪ Fax +49 208 49 52-264

Technical data

Type	IM82-24-2,5
Ident no.	7545041
Power supply	
Nominal voltage	Universal voltage supply unit
Operating voltage range	90…370 VDC
Operating voltage range	85…264 VAC
Frequency	47…63 Hz
Power consumption	≤ 83 VA
Efficiency	89 %
Internal fuse	T 2 A / 250 VAC
inrush current	Ui = 115 VAC, 20 A; Ui = 230 VAC, 40 A
Mains buffering	Ui = 115 VAC, 20 ms; Ui = 230 VAC, 30 ms
Outputs	
Nominal output voltage	24 V
Nominal current	2.5 A
Output circuits (digital)	1 x transistor (potential-free, short-circuit proof), > 18.8…19.6 V
Switching voltage	≤ 24 VDC
Switching current per output	≤ 35 mA
Surge limiting	125-138 %
Overload protection	110-150 %
Parallel mode	yes, via diods
Pollution degree	2
Surge category	II
Short-circuit behaviour	Hiccup mode
Response characteristic	
Limit frequency	≤ 80000 Hz
Indication	
Operational readiness	green
Environmental Conditions	
Ambient temperature	-25…+70 °C
Storage temperature	-25…+85 °C
Relative humidity	≤ 95 %
Derating	-2.5%/°C from 60 °C
Test voltage	3.0 kV
Mechanical data	
Tightening torque	0.5 Nm
Electrical connection	screw terminals
Terminal cross-section	0.2 … 2.0 mm^2
Housing material	plastic
Mounting instruction	for DIN rail
Protection class	IP20
Flammability class acc. to UL 94	V-0
Dimensions	40.5 x 90 x 114 mm

Power supply

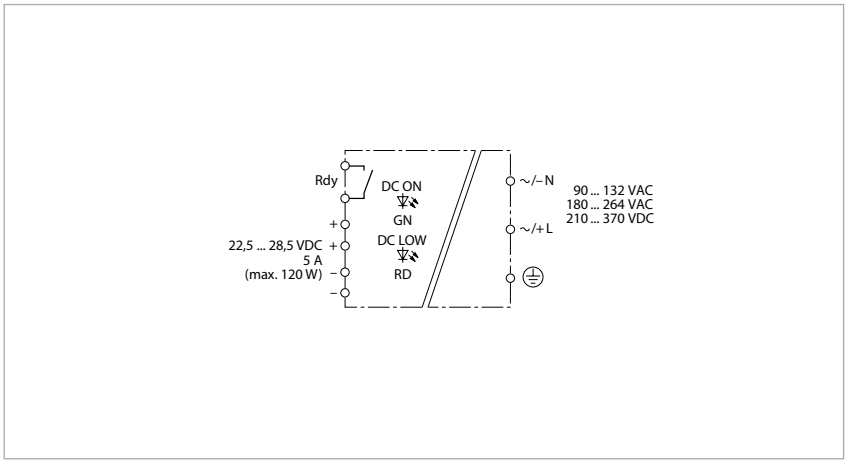

Features

- UL Class 1, Div 2
- Safety extra-low voltage SELV IEC/ EN 60950
- SEMI-F47
- Output voltage adjustable 22.5…28.5 VDC
- Nominal current 5 A
- Single/parallel operating mode
- Surge protection
- Removable terminals
- Mains buffering up to 30 ms
- Power-good relay

The IM82-24-5.0 power supply units are designed for DC loads, particularly the switching and monitoring devices of the TURCK IM, IME, IMS and IMC interface module series.

The power supply provides 24 VDC output voltage and 5.0 A output current. The output voltage is adjusted in a range between 22.5…28.5 VDC with the potentiometer V_{out}. The device provides safety extra-low voltage (SELV) according to EN 60950.

The power supply can be set to single or parallel operating mode.

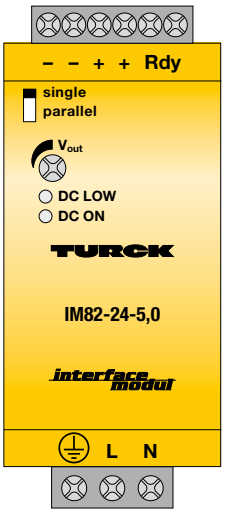

Derating

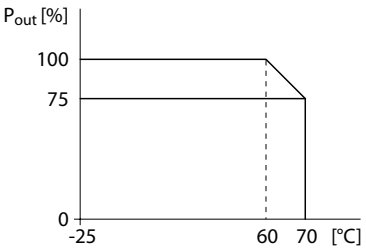

Short-circuit behaviour

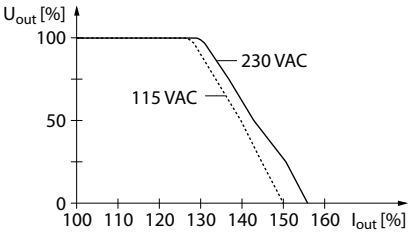

Parallel operation

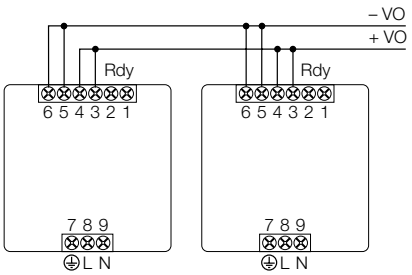

Hans Turck GmbH & Co. KG ▪ Tel. +49 208 49 52-0 ▪ Fax +49 208 49 52-264

Technical data

Type	IM82-24-5,0
Ident no.	7545042

Power supply	
Nominal voltage	Universal voltage supply unit
Operating voltage range	210…370 VDC
Operating voltage range	90…132 VAC
Operating voltage range	186…264 VAC
Frequency	47…73 Hz
Power consumption	≤ 145 VA
PFC	0.7
Efficiency	86 %
Internal fuse	T 3.15 A / 250 VAC
inrush current	Ui = 115 VAC, 24 A; Ui = 230 VAC, 48 A
Mains buffering	Ui = 115 VAC, 25 ms; Ui = 230 VAC, 30 ms

Outputs	
Nominal output voltage	24 V
Nominal current	5 A
Output circuits (digital)	relay (NO), > 17.6 … 19.4 V
Relay switching voltage	≤ 60 VDC
Switching current per output	≤ 300 mA
Surge limiting	125-145 %
Overload protection	105-145 %
Parallel mode	yes, switchover initiated by a switch, max. 3 devices each with 90 % load current
Pollution degree	2
Surge category	II
Short-circuit behaviour	Current limiting

Response characteristic	
Limit frequency	≤ 80000 Hz

Indication	
Operational readiness	green
Error indication	red

Environmental Conditions	
Ambient temperature	-25…+70 °C
Storage temperature	-25…+85 °C
Relative humidity	≤ 95 %
Derating	-2.5%/°C from 60 °C
Test voltage	3.0 kV

Mechanical data	
Tightening torque	0.5 Nm
Electrical connection	screw terminals
Terminal cross-section	0.2 … 2.0 mm²
Housing material	metal
Mounting instruction	for DIN rail
Protection class	IP20
Flammability class acc. to UL 94	V-0
Dimensions	64 x 143.5 x 116.6 mm

Approval | Certification	$_{c}UL_{us}$

Power supply

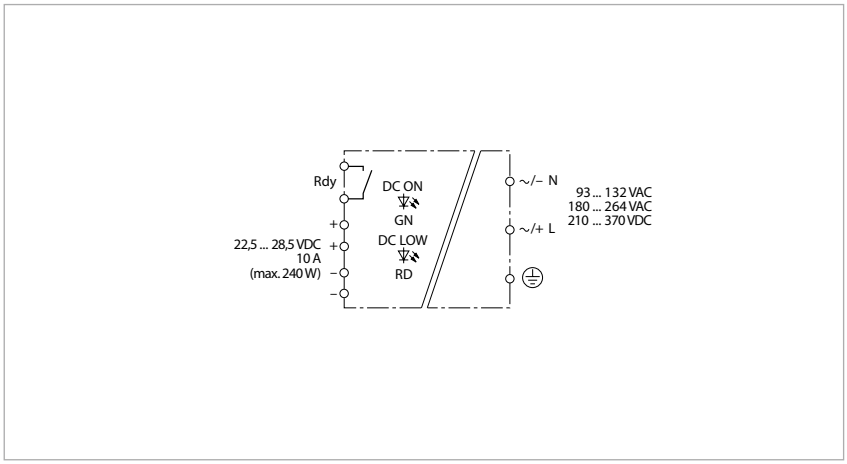

Features

- UL Class 1, Div 2
- Safety extra-low voltage SELV IEC/ EN 60950
- SEMI-F47
- Output voltage adjustable 22.5…28.5 VDC
- Nominal current 10 A
- Single/parallel operating mode
- Surge protection
- Mains buffering up to 30 ms
- Power-good relay

The IM82-24-10 power supply units are designed for DC loads, particularly the switching and monitoring devices of the TURCK IM, IME, IMS and IMC interface module series.

The power supply provides 24 VDC output voltage and 10 A output current. The output voltage is adjusted in a range between 22.5…28.5 VDC with the potentiometer V_{out}. The device provides safety extra-low voltage (SELV) according to EN 60950.

The power supply can be set to single or parallel operating mode.

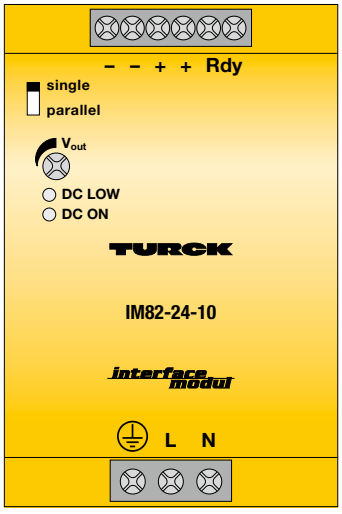

Derating

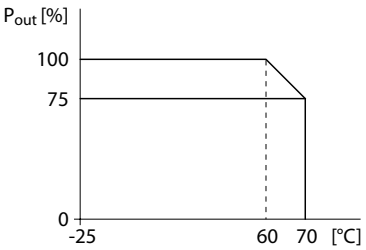

Short-circuit behaviour

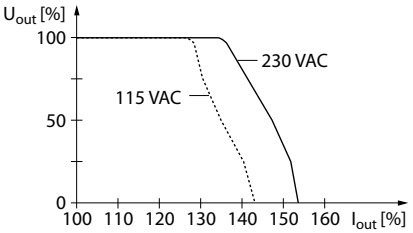

Parallel operation

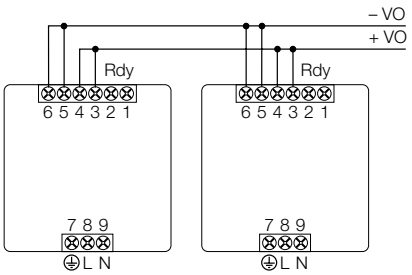

Hans Turck GmbH & Co. KG ▪ Tel. +49 208 49 52-0 ▪ Fax +49 208 49 52-264

Technical data

Type	IM82-24-10
Ident no.	7545043

Power supply	
Nominal voltage	Universal voltage supply unit
Operating voltage range	210…370 VDC
Operating voltage range	90…132 VAC
Operating voltage range	186…264 VAC
Frequency	47…73 Hz
Power consumption	≤ 276 VA
PFC	0.7
Efficiency	89 %
Internal fuse	T 6.3 A / 250 VAC
inrush current	Ui = 115 VAC, 30 A; Ui = 230 VAC, 60 A
Mains buffering	Ui = 115 VAC, 25 ms; Ui = 230 VAC, 30 ms

Outputs	
Nominal output voltage	24 V
Nominal current	10 A
Output circuits (digital)	relay (NO), > 17.6 … 19.4 V
Relay switching voltage	≤ 60 VDC
Switching current per output	≤ 300 mA
Surge limiting	120-145 %
Overload protection	110-150 %
Parallel mode	yes, switchover initiated by a switch, max. 3 devices each with 90 % load current
Pollution degree	2
Surge category	II
Short-circuit behaviour	Current limiting

Response characteristic	
Limit frequency	≤ 40000 Hz

Indication	
Operational readiness	green
Error indication	red

Environmental Conditions	
Ambient temperature	-25…+70 °C
Storage temperature	-25…+85 °C
Relative humidity	≤ 95 %
Derating	-2.5%/°C from 60 °C
Test voltage	3.0 kV

Mechanical data	
Tightening torque	0.5 Nm
Electrical connection	screw terminals
Terminal cross-section	0.2 … 2.0 mm²
Housing material	metal
Mounting instruction	for DIN rail
Protection class	IP20
Flammability class acc. to UL 94	V-0
Dimensions	83.5 x 124.5 x 116.6 mm

Approval | Certification	$_{c}UL_{us}$

Power supply

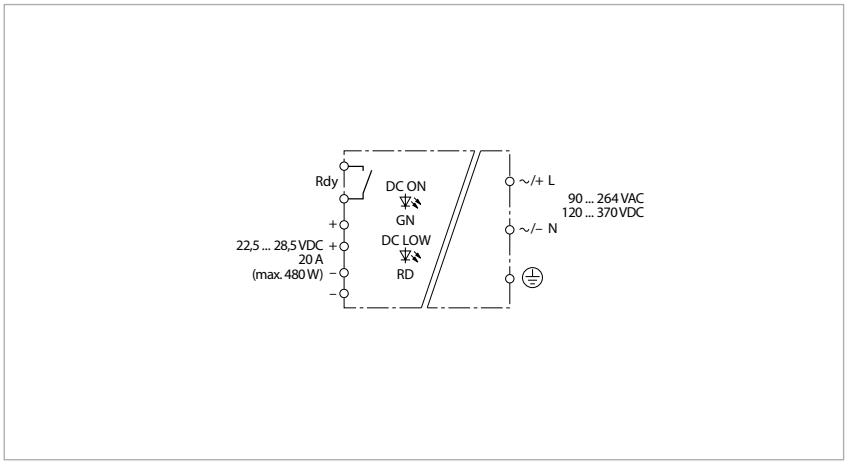

Features

- UL Class 1, Div 2
- Safety extra-low voltage SELV IEC/ EN 60950
- SEMI-F47
- Output voltage adjustable 22.5…28.5 VDC
- Nominal current 20 A
- Single/parallel operating mode
- Surge protection
- Mains buffering up to 30 ms
- Parallel operation
- Power-good relay

The IM82-24-20 power supply units are designed for DC loads, particularly the switching and monitoring devices of the TURCK IM, IME, IMS and IMC interface module series.

The power supply provides 24 VDC output voltage and 20 A output current. The output voltage is adjusted in a range between 22.5…28.5 VDC with the potentiometer V_{out}. The device provides safety extra-low voltage (SELV) according to EN 60950.

The power supply can be set to single or parallel operating mode.

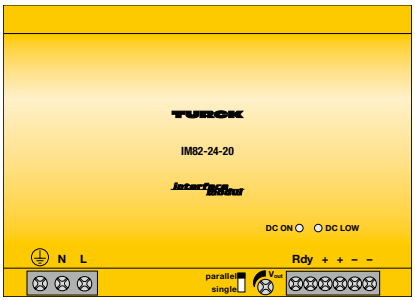

Derating

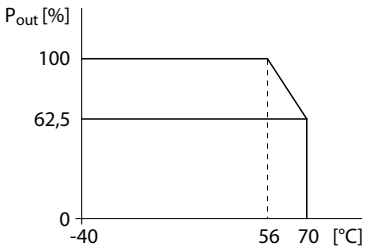

Short-circuit behaviour

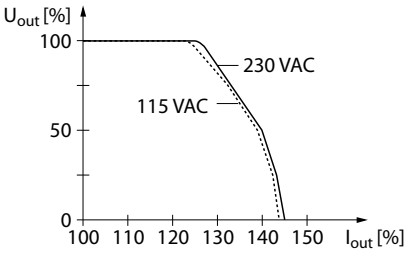

Parallel operation

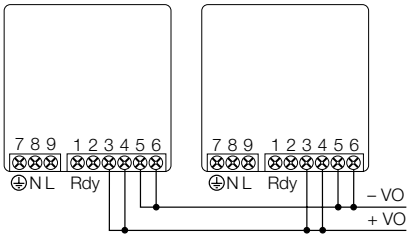

Hans Turck GmbH & Co. KG ▪ Tel. +49 208 49 52-0 ▪ Fax +49 208 49 52-264

Technical data

Type	IM82-24-20
Ident no.	7545044

Power supply	
Nominal voltage	Universal voltage supply unit
Operating voltage range	120…370 VDC
Operating voltage range	90…264 VAC
Frequency	47…63 Hz
Power consumption	≤ 564 VA
PFC	0.99
Efficiency	89 %
Internal fuse	T 10 A / 250 VAC
inrush current	Ui = 115 VAC, 25 A; Ui = 230 VAC, 50 A
Mains buffering	Ui = 115 VAC, 30 ms; Ui = 230 VAC, 30 ms

Outputs	
Nominal output voltage	24 V
Nominal current	20 A
Output circuits (digital)	relay (NO), > 17.6 … 19.4 V
Relay switching voltage	≤ 60 VDC
Switching current per output	≤ 300 mA
Surge limiting	125-137 %
Overload protection	120-140 %
Parallel mode	yes, switchover initiated by a switch, max. 3 devices each with 90 % load current
Pollution degree	2
Surge category	II
Short-circuit behaviour	Current limiting

Response characteristic	
Limit frequency	≤ 60000 Hz

Indication	
Operational readiness	green
Error indication	red

Environmental Conditions	
Ambient temperature	-25…+70 °C
Storage temperature	-25…+85 °C
Relative humidity	≤ 95 %
Derating	4%/°C from 61 °C
Test voltage	3.0 kV

Mechanical data	
Tightening torque	0.6 Nm
Electrical connection	screw terminals
Terminal cross-section	0.2 … 6.0 mm^2
Housing material	metal
Mounting instruction	for DIN rail

Protection class	IP20
Flammability class acc. to UL 94	V-0
Dimensions	175.5 x 124.5 x 116.6 mm

Approval | Certification	$_{c}UL_{us}$

Isolating switching amplifier, 2-channel

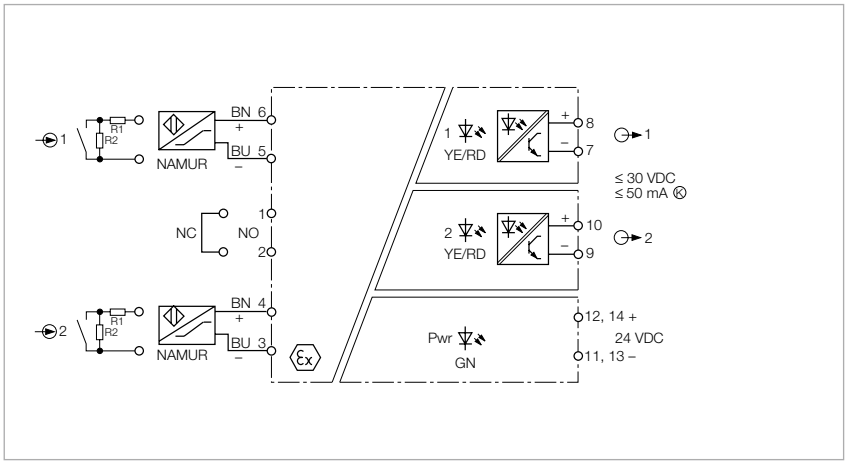

Features

- ATEX, IECEx, TR CU, NEPSI
- Installation in zone 2
- Isolating switching amplifier, 2-channel
- Transistor outputs
- Input circuit monitoring of wire-break/ short-circuit
- Galvanic isolation of input circuits, output circuits and supply voltage

The 2-channel isolating switching amplifier IME-DI-22EX-T/24VDC is equipped with intrinsically safe input circuits. Sensors according to EN 60947-5-6 (NAMUR) or potential-free contact transmitters can be connected to the device.

The output circuits each feature a potential-free transistor output. You can toggle between working or closed current, resp. NO or NC mode via a wire jumper.

When using mechanical contacts, the contacts must be wired with resistors (II) because of wire-break and short-circuit monitoring (see circuit diagram). For this, use the resistor module WM1, ident no. 0912101.

The Pwr LED lights green to indicate operational readiness.

The 2-color LEDs 1 and 2 light yellow to indicate the switching status of the associated output. In the event of an input circuit error, the 2-color LED associated to the affected input turns red. Thereupon the associated output transistor is blocked.

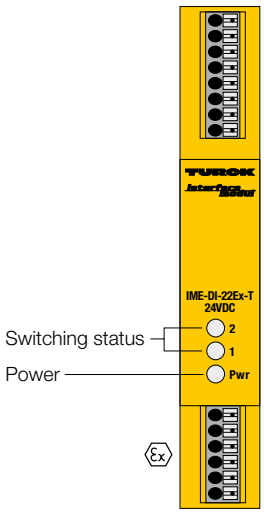

Technical data

Type	IME-DI-22EX-T/24VDC
Ident no.	7541197

Power supply

Nominal voltage	24 VDC
Operating voltage range	20…30 VDC
Power consumption	≤ 1.5 W

Inputs

No-load voltage	8.2 VDC
Short-circuit current	8.2 mA
Input resistance	1 kΩ
Cable resistance	≤ 50 Ω
Switch-on threshold:	1.55 mA
Switch-off threshold:	1.75 mA
Short-circuit threshold	≥ 6 mA
Wire breakage threshold	≤ 0.1 mA

Outputs

Output circuits (digital)	2 x transistor (potential-free, short-circuit proof)
Switching voltage	≤ 30 VDC
Switching current per output	≤ 100 mA
Switching frequency	≤ 3000 Hz
Voltage drop	≤ 2.5 V

Approvals and declarations

Ex approval acc. to conformity certificate	TÜV 07 ATEX 553234
Device designation	Ⓔx II (1) GD [Ex ia] IIC/IIB
Max. values:	Terminal connection: 3+4 / 5+6
Max. output voltage U_o	≤ 9.6 V
Max. output current I_o	≤ 10 mA
Max. output power P_o	≤ 24 mW
Rated voltage	250 V
Characteristic	linear
Internal inductance/capacitance L_i/C_i	L_i = 150 µH, C_i = negligibly small

External inductance/capacitance L_o/C_o

Ex ia	IIC		IIB	
L_o [mH]	10	0.85	20	1.85
C_o [µF]	0.75	1.1	3.4	5.3

Max. output voltage U_o	≤ 9.6 V
Max. output current I_o	≤ 10 mA
Max. output power P_o	≤ 24 mW
Characteristic	linear
Internal inductance/capacitance L_i/C_i	L_i = 150 µH, C_i = negligibly small

External inductance/capacitance L_o/C_o

Ex nL	IIC		IIB	
L_o [mH]	5	0.85	10	0.85
C_o [µF]	1.4	1.9	6.6	11

Ex approval acc. to conformity certificate	TÜV 07 ATEX 554299 X
Application area	II 3 G
Protection type	Ex nA nC [nL] IIC/IIB T4
Max. values:	Terminal connection: 3+4 / 5+6
Max.output voltage U_o	≤ 9.6 V
Max. output current I_o	≤ 10 mA
Max. output power P_o	≤ 24 mW
Characteristic	linear
Internal inductance/capacitance L_i/C_i	L_i = 150 µH, C_i = negligibly small

External inductance/capacitance L_o/C_o

Ex nL	IIC		IIB	
L_o [mH]	5	0.85	10	0.85
C_o [µF]	1.4	1.9	6.6	11

Declaration	SIL 2 acc. to EXIDA FMEDA

Indication

Operational readiness	green
Switching state	yellow
Error indication	red

Environmental Conditions

Ambient temperature	-25…+70 °C
Storage temperature	-40…+80 °C
Test voltage	2.5 kV
MTTF	407 years acc. to SN 29500 (Ed. 99) 40 °C

Mechanical data

Electrical connection	Spring terminal made of Beryllium-Bronze
Terminal cross-section	1.5 mm²
Housing material	Polycarbonate/ABS
Mounting instruction	for DIN rail
Protection class	IP20
Flammability class acc. to UL 94	V-0
Dimensions	18 x 112 x 110 mm

Approval | Certification	ATEX, IECEx, TR CU, NEPSI

Isolating switching amplifier, 2-channel

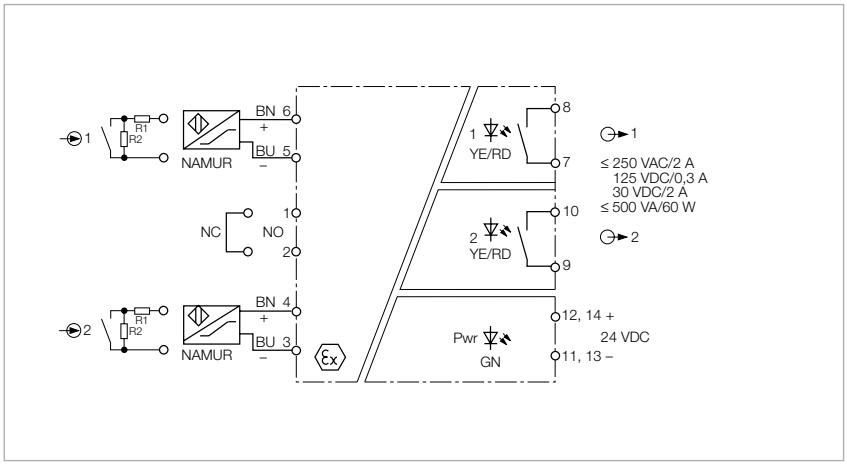

Features

- ATEX, IECEx, TR CU, NEPSI
- Installation in zone 2
- Isolating switching amplifier, 2-channel
- Relay output
- Input circuit monitoring of wire-break/ short-circuit
- Galvanic isolation of input circuits, output circuits and supply voltage

The 2-channel isolating switching amplifier IME-DI-22EX-R/24VDC is equipped with intrinsically safe input circuits. Sensors according to EN 60947-5-6 (NAMUR) or potential-free contact transmitters can be connected to the device.

The output circuits each feature a relay with NO contact. You can toggle between working or closed current, resp. NO or NC mode for both channels via a wire jumper.

When using mechanical contacts, the contacts must be wired with resistors (II) because of wire-break and short-circuit monitoring (see circuit diagram). For this, use the resistor module WM1, ident no. 092101.

The Pwr LED lights green to indicate operational readiness.

The 2-color LEDs 1 and 2 light yellow to indicate the switching status of the associated output. In the event of an input circuit error, the 2-color LED associated to the affected input turns red, provided the input circuit monitoring function is activated. Thereupon the output relay drops out.

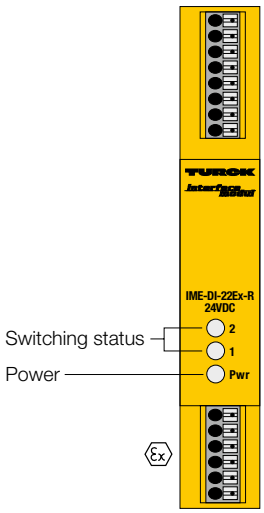

Output relay – Load curve

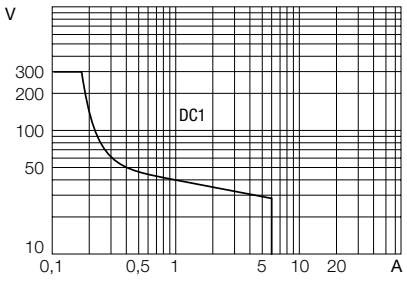

Output relay – Electrical lifetime

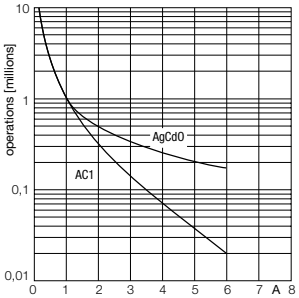

Technical data

Type	IME-DI-22Ex-R/24VDC
Ident no.	7541191

Power supply

Nominal voltage	24 VDC
Operating voltage range	20…30 VDC
Power consumption	≤ 1.7 W

Inputs

No-load voltage	8.2 VDC
Short-circuit current	8.2 mA
Input resistance	1 kΩ
Cable resistance	≤ 50 Ω
Switch-on threshold:	1.55 mA
Switch-off threshold:	1.75 mA
Short-circuit threshold	≥ 6 mA
Wire breakage threshold	≤ 0.1 mA

Outputs

Output circuits (digital)	2 x relays (NO)
Switching frequency	≤ 10 Hz
Relay switching voltage	≤ 250 VAC/120 VDC
Switching current per output	≤ 2 A
Switching capacity per output	≤ 500 VA/60 W
Contact quality	AgNi, 3µ Au

Approvals and declarations

Ex approval acc. to conformity certificate	TÜV 07 ATEX 553234
Device designation	Ⓔx II (1) GD [Ex ia] IIC/IIB
Max. values:	Terminal connection: 3+4 / 5+6
Max. output voltage U_o	≤ 9.6 V
Max. output current I_o	≤ 10 mA
Max. output power P_o	≤ 24 mW
Rated voltage	250 V
Characteristic	linear
Internal inductance/capacitance L_i/C_i	L_i = 150 µH, C_i = negligibly small

External inductance/capacitance L_o/C_o

Ex ia	IIC		IIB	
L_o [mH]	10	0.85	20	1.85
C_o [µF]	0.75	1.1	3.4	5.3

Max. output voltage U_o	≤ 9.6 V
Max. output current I_o	≤ 10 mA
Max. output power P_o	≤ 24 mW
Characteristic	linear
Internal inductance/capacitance L_i/C_i	L_i = 150 µH, C_i = negligibly small

External inductance/capacitance L_o/C_o

Ex nL	IIC		IIB	
L_o [mH]	5	0.85	10	0.85
C_o [µF]	1.4	1.9	6.6	11

Ex approval acc. to conformity certificate	TÜV 07 ATEX 554299 X
Application area	II 3 G
Protection type	Ex nA nC [nL] IIC/IIB T4
Max. values:	Terminal connection: 3+4 / 5+6
Max.output voltage U_o	≤ 9.6 V
Max. output current I_o	≤ 10 mA
Max. output power P_o	≤ 24 mW
Characteristic	linear
Internal inductance/capacitance L_i/C_i	L_i = 150 µH, C_i = negligibly small

External inductance/capacitance L_o/C_o

Ex nL	IIC		IIB	
L_o [mH]	5	0.85	10	0.85
C_o [µF]	1.4	1.9	6.6	11

Declaration	SIL 2 acc. to EXIDA FMEDA

Indication

Operational readiness	green
Switching state	yellow
Error indication	red

Environmental Conditions

Ambient temperature	-25…+70 °C
Storage temperature	-40…+80 °C
Test voltage	2.5 kV
MTTF	235 years acc. to SN 29500 (Ed. 99) 40 °C

Mechanical data

Electrical connection	Spring terminal made of Beryllium-Bronze
Terminal cross-section	1.5 mm²
Housing material	Polycarbonate/ABS
Mounting instruction	for DIN rail
Protection class	IP20
Flammability class acc. to UL 94	V-0
Dimensions	18 x 112 x 110 mm

Approval | Certification	ATEX, IECEx, TR CU, NEPSI

Input analog signal isolator, 1-channel

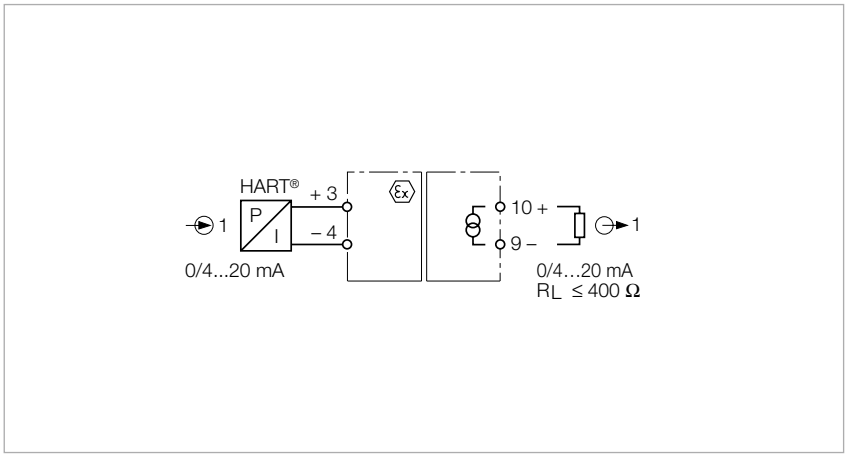

Features

- ATEX, IECEx, TR CU, NEPSI
- Installation in zone 2
- HART® transmissible
- Complete galvanic isolation

Standard active current signals are galvanically isolated and transmitted via the 1-channel analog signal isolator IME-AI-11EX-i/L from the Ex area to the non-Ex area.

The device features one input circuit 0/4… 20 mA and one short-circuit proof output circuit 0/4…20 mA.

Input and output circuit are safely galvanically isolated. The input signals are transmitted 1:1 and are presented to the relevant outputs in the non-Ex area.

The device is loop-powered and HART® transmissible.



Technical data

Type	IME-AI-11Ex-Hi/L
Ident no.	7541192
Power supply	
Nominal voltage	24 VDC loop-powered
Power consumption	≤ 0.75 W
Inputs	
Voltage input	max. 30 VDC
Current input	0…20 mA
Control circuits	Current limiting 42 mA
Outputs	
Load resistance, current output	≤ 0.4 kΩ
Output current	0…20 mA
Output voltage	max. 13 V
Response characteristic	
Measuring accuracy	≤ 0.1 % of full scale
Reference temperature	23 °C
Temperature drift	≤ 0.001 % / K
Rise time (10-90%)	≤ 10 ms
Dropout time (90…10%)	≤ 10 ms
Approvals and declarations	
Ex approval acc. to conformity certificate	TÜV 08 ATEX 553236
Device designation	Ⓔx II (1) G, II (1) D [Ex ia] IIB/IIC; [Ex iaD]
Max. values:	Terminal connection: 3+4
Rated voltage	250 V
Max. input voltage U_i	≤ 27 V
Max. input current I_i	≤ 150 mA
Max. input power P_i	≤ 1000 mW
Internal inductance/capacitance L_i/C_i	negligibly small
Ex approval acc. to conformity certificate	TÜV 08 ATEX 554624 X
Application area	II 3 G
Protection type	Ex nA [nL] IIC/IIB T4
Max. values:	Terminal connection: 3+4
Max. input voltage U_i	≤ 27 V
Max. input current I_i	≤ 150 mA
Max. input power P_i	≤ 1000 mW
Internal inductance/capacitance L_i/C_i	negligibly small
Declaration	SIL 2 acc. to EXIDA FMEDA
Environmental Conditions	
Ambient temperature	-25…+70 °C
Storage temperature	-40…+80 °C
Test voltage	2.5 kV
MTTF	537 years acc. to SN 29500 (Ed. 99) 40 °C
Mechanical data	
Electrical connection	Spring terminal made of Beryllium-Bronze
Terminal cross-section	1.5 mm²
Housing material	Polycarbonate/ABS
Mounting instruction	for DIN rail
Protection class	IP20
Flammability class acc. to UL 94	V-0
Dimensions	18 x 112 x 110 mm
Approval | Certification	ATEX, IECEx, TR CU, NEPSI

Input analog signal isolator, 1-channel

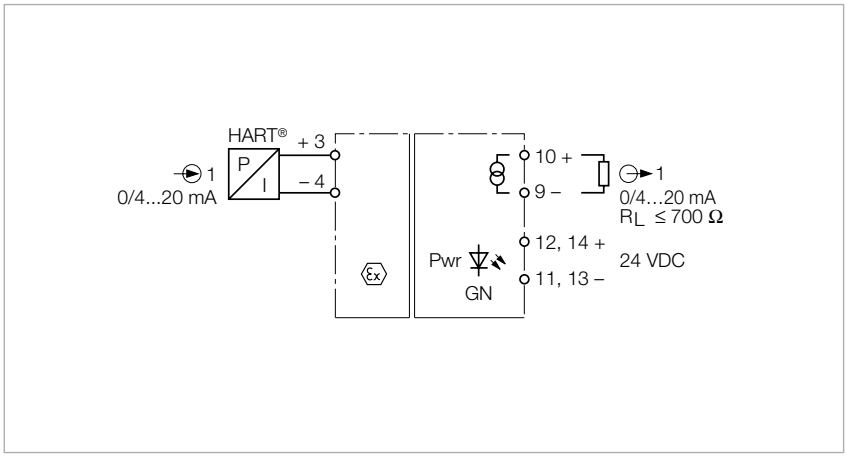

Features

- ATEX, IECEx, TR CU, NEPSI
- Installation in zone 2
- HART® transmissible
- Complete galvanic isolation

Standard active current signals are galvanically isolated and transmitted via the 1-channel analog signal isolator IME-AI-11EX-Hi/24VDC from the Ex area to the non-Ex area.

Besides the analog signals, digital HART® communication signals can also be transmitted bidirectionally.

The device features one input and one output circuit, each with 0/4…20 mA.

A green LED indicates operational readiness.

Input and output circuit are safely galvanically isolated. The input signal is transmitted 1:1 and is presented to the relevant output in the non-Ex area. As a result of the 1:1 transmission behaviour, wire-break and short circuit are output as currents of 0 mA or > 22.5 mA in the measuring transducer circuit.

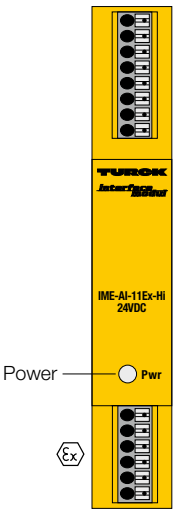

Technical data

Type	IME-AI-11Ex-Hi/24VDC
Ident no.	7541198

Power supply

Nominal voltage	24 VDC
Operating voltage range	20…30 VDC
Power consumption	≤ 0.75 W

Inputs

Current input	0/4…20 mA
Control circuits	Current limiting 42 mA

Outputs

Load resistance, current output	≤ 0.7 kΩ
Output current	0/4…20 mA
Wire break monitoring	≤ 1 mA
Short circuit monitoring	≥ 22.5 mA

Response characteristic

Measuring accuracy	≤ 0.1 % of full scale
Temperature drift	≤ 0.001 % / K
Rise time (10-90%)	≤ 10 ms
Dropout time (90…10%)	≤ 10 ms

Approvals and declarations

Ex approval acc. to conformity certificate	TÜV 10 ATEX 555275
Device designation	Ⓔx II (1) G, II (1) D [Ex ia] IIB/IIC; [Ex ia Da]
Max. values:	Terminal connection: 3+4
Rated voltage	250 V
Max. input voltage U_i	≤ 27 V
Max. input current I_i	≤ 150 mA
Max. input power P_i	≤ 1000 mW
Internal inductance/capacitance L_i/C_i	negligibly small
Ex approval acc. to conformity certificate	TÜV 10 ATEX 555276 X
Application area	II 3 G
Protection type	Ex nA [nL] IIC/IIB T4
Max. values:	Terminal connection: 3+4
Max. input voltage U_i	≤ 27 V
Max. input current I_i	≤ 150 mA
Max. input power P_i	≤ 1000 mW
Internal inductance/capacitance L_i/C_i	negligibly small
Declaration	SIL 2 acc. to EXIDA FMEDA

Indication

Operational readiness	green

Environmental Conditions

Ambient temperature	-25…+70 °C
Storage temperature	-40…+80 °C
Test voltage	2.5 kV
MTTF	435 years acc. to SN 29500 (Ed. 99) 40 °C

Mechanical data

Electrical connection	Spring terminal made of Beryllium-Bronze
Terminal cross-section	1.5 mm²
Housing material	Polycarbonate/ABS
Mounting instruction	for DIN rail
Protection class	IP20
Flammability class acc. to UL 94	V-0
Dimensions	18 x 112 x 110 mm

Approval | Certification	ATEX, IECEx, TR CU, NEPSI

HART® isolating transducer, 1-channel

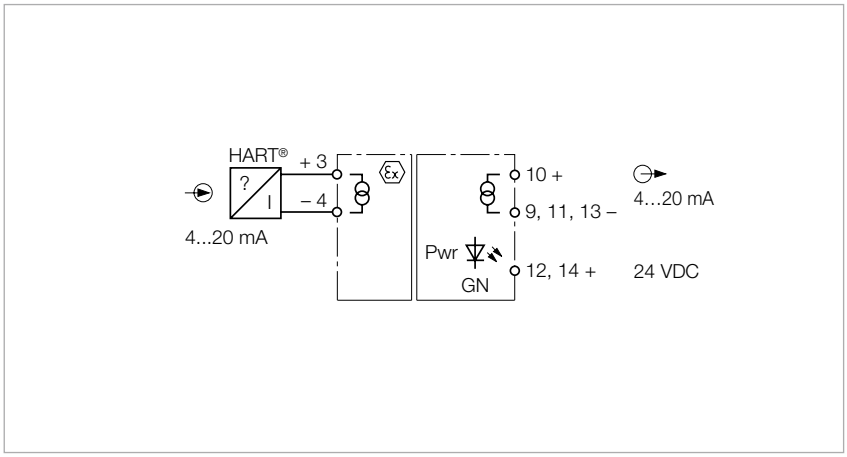

Features

- ATEX, IECEx, TR CU, NEPSI
- Installation in zone 2
- Power supply of transmitters in the Ex area
- HART® transmissible
- Galvanic isolation of input circuits, output circuits and supply voltage

The 1-channel HART® isolating transducer IME-AIA-11EX-Hi/24VDC is used to energize intrinsically safe 2-wire HART® transducers (III) in the Ex area and to transmit the measured signal to the non-Ex area.

Besides the analog signals, digital HART® communication signals can also be transmitted bidirectionally.

The device features one input and one output circuit for 4…20 mA.

A green LED indicates operational readiness.

Input and output circuit are safely galvanically isolated. The input signal is transmitted 1:1 and is presented to the relevant output in the non-Ex area. As a result of the 1:1 transmission behaviour, wire-break and short circuit are output as currents of 0 mA or > 22.5 mA in the measuring transducer circuit.

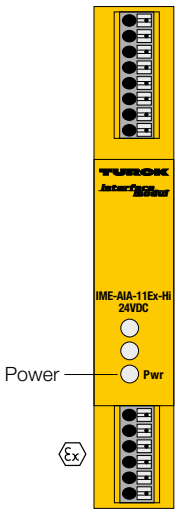

Technical data

Type	IME-AiA-11Ex-Hi/24VDC
Ident no.	7541193

Power supply	
Nominal voltage	24 VDC
Operating voltage range	20…30 VDC
Power consumption	≤ 1 W

Inputs	
Input circuits	isolating transducer
Supply voltage	≥ 13 V / 20 mA
Current	35 mA
Current input	4…20 mA

Outputs	
Load resistance, current output	≤ 0.5 kΩ
Output current	4…20 mA

Response characteristic	
Measuring accuracy	≤ 0.1 % of full scale
Reference temperature	23 °C
Rise time (10-90%)	≤ 10 ms
Dropout time (90…10%)	≤ 10 ms

Approvals and declarations	
Ex approval acc. to conformity certificate	TÜV 08 ATEX 554801
Device designation	Ⓔx II (1) G, II (1) D [Ex ia] IIB ; [Ex iaD]
Max. values:	Terminal connection: 3+4
Max. output voltage U_o	≤ 23 V
Max. output current I_o	≤ 64.5 mA
Max. output power P_o	≤ 799 mW
Rated voltage	250 V
Characteristic	Trapezoidal
Internal inductance/capacitance L_i/C_i	L_i = 76.5 µH, C_i = 22 nF

External inductance/capacitance L_o/C_o

Ex ia	IIC			IIB		
L_o [mH]	0.804	0.424	0.024	4.8	0.9	0.12
C_o [nF]	46	62	121	358	418	718

Ex approval acc. to conformity certificate	TÜV 08 ATEX 554909 X
Application area	II 3 G
Protection type	Ex nA [nL] IIB/IIC T4
Max. values:	Terminal connection: 3+4
Max.output voltage U_o	≤ 23 V
Max. output current I_o	≤ 64.5 mA
Max. output power P_o	≤ 799 mW
Characteristic	trapezoidal
Internal inductance/capacitance L_i/C_i	C_i = 22 nF, L_i = 76.5 µH

External inductance/capacitance L_o/C_o

Ex nL	IIC	IIB
L_o [mH]	0.12	19.9
C_o [nF]	188	786

Declaration	SIL 2 acc. to EXIDA FMEDA

Indication	
Operational readiness	green

Environmental Conditions	
Ambient temperature	-25…+70 °C
Storage temperature	-40…+80 °C
Test voltage	2.5 kV
MTTF	474 years acc. to SN 29500 (Ed. 99) 40 °C

Mechanical data	
Electrical connection	Spring terminal made of Beryllium-Bronze
Terminal cross-section	1.5 mm²
Housing material	Polycarbonate/ABS
Mounting instruction	for DIN rail
Protection class	IP20
Flammability class acc. to UL 94	V-0
Dimensions	18 x 112 x 110 mm

Approval | Certification	ATEX, IECEx, TR CU, NEPSI

Temperature measuring amplifier, 1-channel

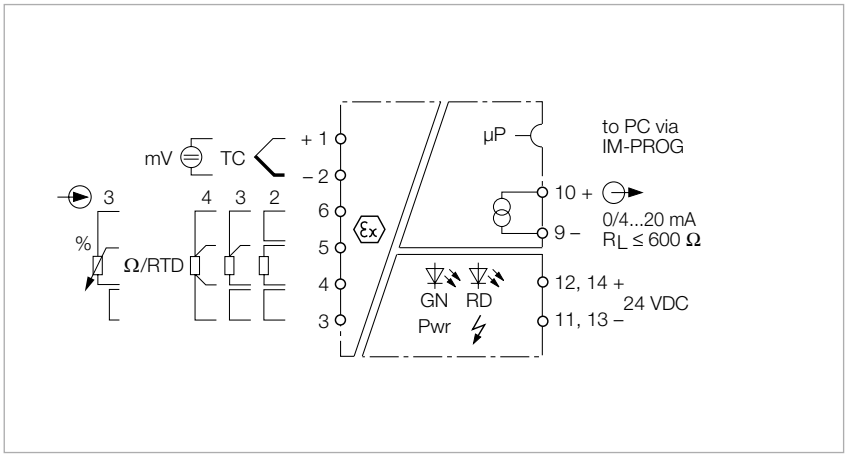

Features

- ATEX, IECEx, TR CU, NEPSI
- Installation in zone 2
- Input for Pt100/ Ni100 resistors, thermocouples and millivolt signals in 2, 3 or 4-wire technology
- Parametrized via PACTware™
- Output: 0/4…20 mA
- Line monitored for wire-break/short-circuit (ON/OFF switchable)
- Complete galvanic isolation

The temperature measuring amplifier IME-TI-11Ex-CI/24VDC is designed to evaluate the temperature-dependent changes of Ni100/Pt100 RTDs, thermocouples types B, E, J, K, L, N, R, S and T or low voltages in a range of -160…+160 mV and to output them as linear temperature current signals 0/4…20 mA.

Alternatively, Ni100/Pt100 RTDs in 2, 3 or 4-wire technology can also be operated at the input circuit of the measuring amplifier. The Ni100/Pt100 input can either be used as external cold junction compensation for the thermocouple (2-wire) or as independent measuring input.

The devices are parametrized and configured via PC with the software tool „Device Type Manager" (DTM). For this, connect the temperature measuring amplifier to the PC with the 3.5 mm jack plug on the front. The ready-made transmission cable can be ordered from TURCK under the type name IM-PROG (ident no. 6890422).

The following settings can be adjusted via DTM:

- Connection mode (2, 3 and 4-wire technology)
- Measuring range start
- Measuring range end
- Input circuit monitoring for wire-break
- Current output behaviour in the event of input circuit errors: 0 or > 22 mA
- Internal or external cold junction compensation
- Output current (0/4…20 mA)
- Temperature (°C or °K)
- Mode (resistor, thermocouples, low voltage, line compensation)

The signals are transformed according to ITS 90/IEC 584 for thermocouples and IEC 751 for Pt100 RTDs and provided as temperature-linear signals at the current output.

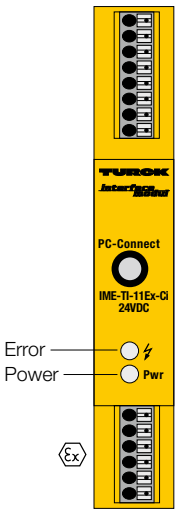

Technical data

Type	IME-TI-11Ex-CI/24VDC
Ident no.	7541199

Power supply

Nominal voltage	24 VDC
Operating voltage range	20…30 VDC
Power consumption	≤ 1.5 W

Inputs

Input circuits	thermocouple, Pt100, Ni100
Pt100	(IEC 751), 2, 3 and 4-wire technology
Ni100	(DIN 43760), 2, 3 and 4-wire technology
Probe current	≤ 0.2 mA
Thermocouples	B, E, J, K, N, R, S, T (ITS 90/IEC 584), L (DIN 43710)
Nominal resistance	0…1.5 kΩ
Voltage input	-0.160…+0.160 VDC

Outputs

Load resistance, current output	≤ 0.6 kΩ
Output current	0/4…20 mA
Switching frequency	≤ 1 Hz
Fault current	0 / 22 mA adjustable

Response characteristic

Reference temperature	23 °C
Accuracy current output	± 20 µA
Temperature drift analogue output	0.0025 %/K
Temperature drift RTD input	± 3 mΩ/K
Temperature drift TC input	3.2 µV / K (of 320 mV)
Accuracy RTD input	± 50 mΩ
Accuracy TC input	± 15 µV
Cold junction compensation error	2-wire < 100 mΩ after line compensation 3-wire < 100 mΩ with asymmetrical wiring 4-wire < 50 mΩ with cold junction compensation< 2 K with IM-3-CJT < 1 K
Rise time (10-90%)	≤ 30 ms

Approvals and declarations

Ex approval acc. to conformity certificate	TÜV 09 ATEX 555273
Device designation	Ⓔx II (1) G, II (1) D [Ex ia] IIB/IIC; [Ex iaD]
Max. values:	Terminal connection: 1…6
Max. output voltage U_o	≤ 5 V
Max. output current I_o	≤ 2 mA
Max. output power P_o	≤ 2.5 mW
Rated voltage	250 V
Characteristic	linear
Internal inductance/capacitance L_i/C_i	negligibly small

External inductance/capacitance L_o/C_o

Ex ia	IIB			IIC		
L_o [mH]	100	10	1	100	10	1
C_o [µF]	10	13	21	2.2	2.7	3.9

Ex approval acc. to conformity certificate	TÜV 09 ATEX 555274 X
Application area	II 3 G
Protection type	Ex nA [nL] IIB/IIC T4
Max. values:	Terminal connection: 1…6
Max.output voltage U_o	≤ 5 V
Max. output current I_o	≤ 2 mA
Max. output power P_o	≤ 2.5 mW
Characteristic	linear
Internal inductance/capacitance L_i/C_i	negligibly small

External inductance/capacitance L_o/C_o

Ex nL	IIB			IIC		
L_o [mH]	100	10	1	100	10	1
C_o [µ]	18	23	37	3.6	4.5	6.6

Indication

Operational readiness	green
Error indication	red

Environmental Conditions

Ambient temperature	-25…+70 °C
Storage temperature	-40…+80 °C
Test voltage	2.5 kV

Mechanical data

Electrical connection	Spring terminal made of Beryllium-Bronze
Terminal cross-section	1.5 mm²
Housing material	Polycarbonate/ABS
Mounting instruction	for DIN rail
Protection class	IP20
Flammability class acc. to UL 94	V-0
Dimensions	18 x 112 x 110 mm

Approval | Certification	ATEX, IECEx, TR CU, NEPSI

Ouput analog signal isolator, 1-channel

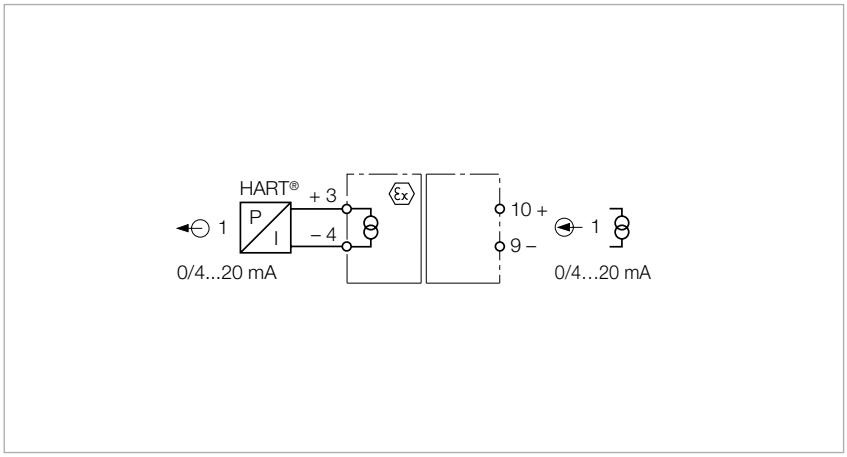

Features

- ATEX, IECEx, TR CU, NEPSI
- Installation in zone 2
- Output isolator, 1-channel
- HART® transmissible
- Connection of positioners, displays etc.
- Complete galvanic isolation

The 1-channel analog data transmitter IME-AO-11Ex-i/L has an intrinsically safe output circuit.

The normalized current signal is transmitted, galvanically isolated 1:1, from the non-Ex to the Ex-area.

The output circuit is equipped with a short-circuit proof power source. Intrinsically analog actuators like I/P converters (e.g. at control valves) or displays can be applied in the Ex area.

The device is loop-powered.

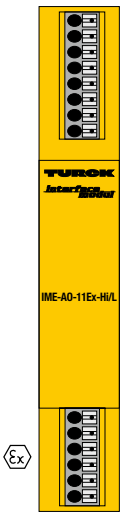

Technical data

Type	IME-AO-11Ex-Hi/L
Ident no.	7541194

Power supply	
Nominal voltage	24 VDC loop-powered
Power consumption	≤ 0.75 W

Inputs	
Voltage input	max. 30 VDC
Current input	0…20 mA
Control circuits	Current limiting 42 mA

Outputs	
Output circuits	0…20 mA
Load resistance, current output	≤ 0.4 kΩ
Output current	0…20 mA
Output voltage	max. 13 V

Response characteristic	
Measuring accuracy	≤ 0.1 % of full scale
Reference temperature	23 °C
Temperature drift	≤ 0.001 % / K
Rise time (10-90%)	≤ 10 ms
Dropout time (90…10%)	≤ 10 ms

Approvals and declarations	
Ex approval acc. to conformity certificate	TÜV 08 ATEX 554800
Device designation	⟨Ex⟩ II (1) G, II (1) D [Ex ia] IIB/IIC; [Ex iaD]
Max. values:	Terminal connection: 3+4
Max. output voltage U_o	≤ 13.3 V
Max. output current I_o	≤ 97 mA
Max. output power P_o	≤ 322 mW
Rated voltage	250 V
Characteristic	linear
Internal inductance/capacitance L_i/C_i	negligibly small

External inductance/capacitance L_o/C_o

Ex ia	IIC		IIB	
L_o[mH]	2	0.2	2	0.2
C_o[µF]	0.42	0.91	2.7	5.5

Max. output voltage U_o	≤ 13.3 V
Max. output current I_o	≤ 97 mA
Max. output power P_o	≤ 322 mW
Characteristic	linear
Internal inductance/capacitance L_i/C_i	negligibly small

External inductance/capacitance L_o/C_o

Ex nL	IIC		IIB	
L_o [mH]	5	0.5	10	1
C_o [µF]	0.51	1.2	2.9	5.8

Ex approval acc. to conformity certificate	TÜV 08 ATEX 554818 X
Application area	II 3 G
Protection type	Ex nA [nL] IIC/IIB T4
Max. values:	Terminal connection: 3+4
Max.output voltage U_o	≤ 13.3 V
Max. output current I_o	≤ 97 mA
Max. output power P_o	≤ 322 mW
Characteristic	linear
Internal inductance/capacitance L_i/C_i	negligibly small

External inductance/capacitance L_o/C_o

Ex nL	IIC		IIB	
L_o [mH]	5	0.5	10	1
C_o [µF]	0.51	1.2	2.9	5.8

Declaration	SIL 2 acc. to EXIDA FMEDA

Environmental Conditions	
Ambient temperature	-25…+70 °C
Storage temperature	-40…+80 °C
Test voltage	2.5 kV
MTTF	515 years acc. to SN 29500 (Ed. 99) 40 °C

Mechanical data	
Electrical connection	Spring terminal made of Beryllium-Bronze
Terminal cross-section	1.5 mm²
Housing material	Polycarbonate/ABS
Mounting instruction	for DIN rail
Protection class	IP20
Flammability class acc. to UL 94	V-0
Dimensions	18 x 112 x 110 mm

Approval | Certification	ATEX, IECEx, TR CU, NEPSI

Solonoid driver, 1-channel

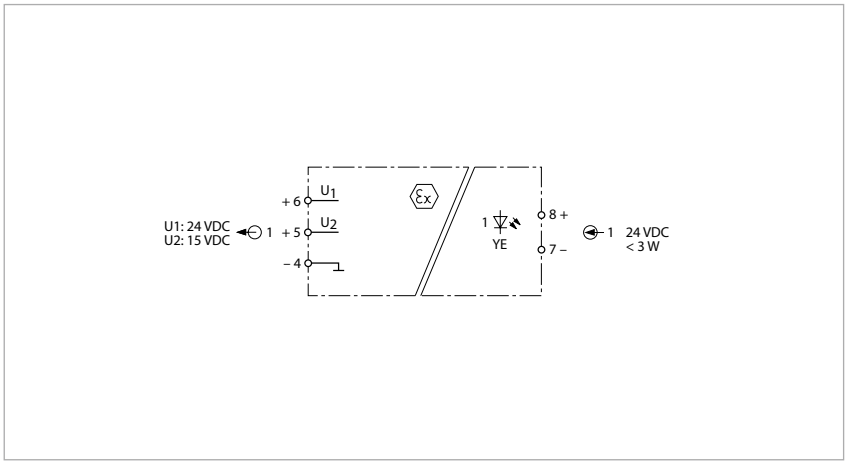

Features

- ATEX, IECEx, TR CU, NEPSI
- Installation in zone 2
- Solonoid driver (intrinsically safe power source), 1-channel
- 2 output values selectable per channel
- LED status indication
- Complete galvanic isolation

The 1-channel solonoid driver IME-DO-11Ex/L provides limited current and voltage at the intrinsically safe output. This enables them to be used directly for supplying loads in the Ex area.

Within the area of applicability of the European directive 94/9/EC (ATEX) it is permitted to operate connected loads in potentially explosive atmospheres caused by dust or gas, provided they comply with the applicable regulations. Typical applications are the control of Ex i pilot valves as well as the supply of displays and transmitters.

The output values of the two connections U1 and U2 per channel differ in terms of their no-load voltage (see output curve on next page). They are adapted to the valves of different manufacturers. The loads are actuated by applying the operating voltage.

A yellow LED indicates the switching state of the associated output.

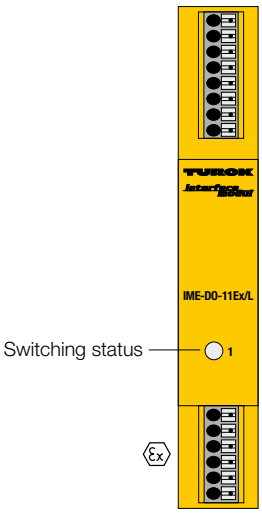

Technical data

Type	IME-DO-11EX/L
Ident no.	7541196

Power supply

Nominal voltage	24 VDC loop-powered
Power consumption	≤ 1.5 W

Inputs

0-signal	0…5 VDC
1-signal	20…30 VDC
Voltage input	max. 30 VDC
Current input	45 mA
Input delay	≤ 0.4 ms

Outputs

Output current	40 mA
Output voltage	U1=24 V
Output voltage	U2=15 V
Output curve	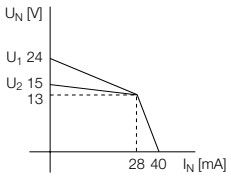

Response characteristic

Limit frequency	≤ 500 Hz

Approvals and declarations

Ex approval acc. to conformity certificate	TÜV 06 ATEX 2977 X
Device designation	⟨Ex⟩ II (1) GD [Ex ia] IIC/IIB
Max. output voltage U_o	≤ 25.4 V
Max. output current I_o	≤ 96 mA
Max. output power P_o	≤ 678 mW
Rated voltage	250 V
Characteristic	Trapezoidal
Internal inductance/capacitance L_i/C_i	negligibly small

External inductance/capacitance L_o/C_o

Ex ia	IIC		IIB	
L_o [mH]	0.68	0.5	13.0	2.0
C_o [µF]	0.067	0.076	0.31	0.34

Max. output voltage U_o	≤ 17.6 V
Max. output current I_o	≤ 96 mA
Max. output power P_o	≤ 678 mW
Characteristic	Trapezoidal
Internal inductance/capacitance L_i/C_i	negligibly small

External inductance/capacitance L_o/C_o

Ex ia	IIC		IIB	
L_o [mH]	1.2	0.5	13.0	2.0
C_o [µF]	0.13	0.15	0.47	1.1

Ex approval acc. to conformity certificate	TÜV 06 ATEX 2979 X
Application area	II 3 G
Protection type	Ex nA [nL] IIC / IIB T4
Characteristic	trapezoidal
Internal inductance/capacitance L_i/C_i	negligibly small

External inductance/capacitance L_o/C_o

Ex nL	IIC		IIB	
L_o [mH]	1.0	0.5	5.0	0.5
C_o [µF]	0.11	0.14	0.75	0.91

Characteristic	trapezoidal
Internal inductance/capacitance L_i/C_i	negligibly small

External inductance/capacitance L_o/C_o

Ex nL	IIC		IIB	
L_o [mH]	2.0	0.5	5.0	1.0
C_o [µF]	0.3	0.42	1.6	2.5

Declaration	SIL 3 acc. to EXIDA FMEDA

Indication

Switching state	yellow

Environmental Conditions

Ambient temperature	-25…+70 °C
Storage temperature	-40…+80 °C
Test voltage	2.5 kV
MTTF	363 years acc. to SN 29500 (Ed. 99) 40 °C

Mechanical data

Electrical connection	Spring terminal made of Beryllium-Bronze
Terminal cross-section	1.5 mm²
Housing material	Polycarbonate/ABS
Mounting instruction	for DIN rail
Protection class	IP20
Flammability class acc. to UL 94	V-0
Dimensions	18 x 112 x 110 mm

Approval | Certification	ATEX, IECEx, TR CU, NEPSI

Solonoid driver, 2-channel

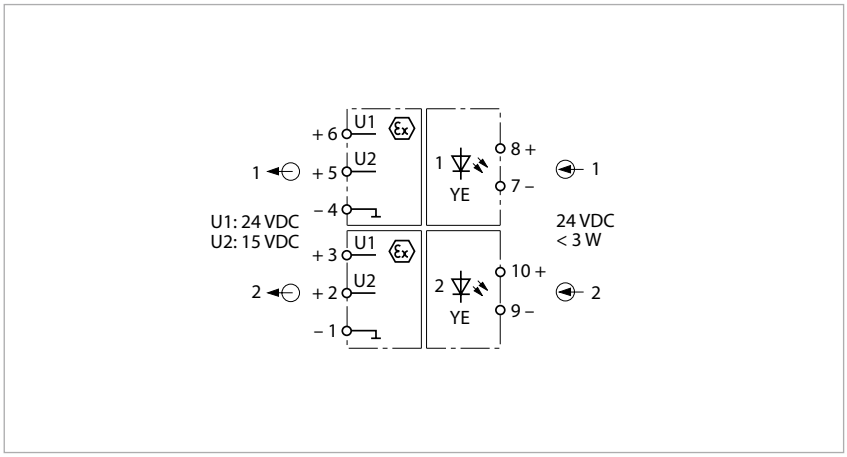

Features

- ATEX, IECEx, TR CU, NEPSI
- Installation in zone 2
- Solonoid driver, 2-channel, (intrinsically safe power source)
- 2 output values selectable per channel
- LED status indication
- Complete galvanic isolation

The 2-channel solonoid driver IME-DO-22Ex/L provides limited current and voltage at the intrinsically safe output. This enables them to be used directly for supplying loads in the Ex area.

Within the area of applicability of the European directive 94/9/EC (ATEX) it is permitted to operate connected loads in potentially explosive atmospheres caused by dust or gas, provided they comply with the applicable regulations. Typical applications are the control of Ex i pilot valves as well as the supply of displays and transmitters.

The output values of the two connections U1 and U2 per channel differ in terms of their no-load voltage (see output curve on next page). They are adapted to the valves of different manufacturers. The loads are actuated by applying the operating voltage.

A yellow LED indicates the switching state of the associated output.

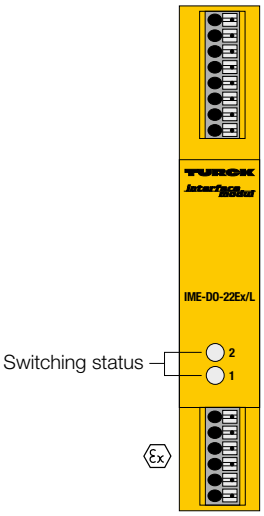

Technical data

Type	IME-DO-22EX/L
Ident no.	7541195

Power supply

Nominal voltage	24 VDC loop-powered
Power consumption	≤ 3 W

Inputs

0-signal	0…5 VDC
1-signal	20…30 VDC
Voltage input	max. 30 VDC
Input delay	≤ 0.4 ms

Outputs

Output current	40 mA
Output voltage	U1=24 V
Output voltage	U2=15 V
Output curve	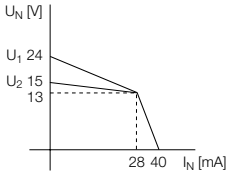

Response characteristic

Limit frequency	≤ 500 Hz

Approvals and declarations

Ex approval acc. to conformity certificate	TÜV 06 ATEX 2977 X
Device designation	Ex II (1) GD [Ex ia] IIC/IIB
Max. output voltage U_o	≤ 25.4 V
Max. output current I_o	≤ 96 mA
Max. output power P_o	≤ 678 mW
Rated voltage	250 V
Characteristic	Trapezoidal
Internal inductance/capacitance L_i/C_i	negligibly small

External inductance/capacitance L_o/C_o

Ex ia	IIC		IIB	
L_o [mH]	0.68	0.5	13.0	2.0
C_o [µF]	0.067	0.076	0.31	0.34

Max. output voltage U_o	≤ 17.6 V
Max. output current I_o	≤ 96 mA
Max. output power P_o	≤ 678 mW
Characteristic	Trapezoidal
Internal inductance/capacitance L_i/C_i	negligibly small

External inductance/capacitance L_o/C_o

Ex ia	IIC		IIB	
L_o [mH]	1.2	0.5	13.0	2.0
C_o [µF]	0.13	0.15	0.47	1.1

Ex approval acc. to conformity certificate	TÜV 06 ATEX 2979 X
Application area	II 3 G
Protection type	Ex nA [nL] IIC / IIB T4
Characteristic	trapezoidal
Internal inductance/capacitance L_i/C_i	negligibly small

External inductance/capacitance L_o/C_o

Ex nL	IIC		IIB	
L_o [mH]	1.0	0.5	5.0	0.5
C_o [µF]	0.11	0.14	0.75	0.91

Characteristic	trapezoidal
Internal inductance/capacitance L_i/C_i	negligibly small

External inductance/capacitance L_o/C_o

Ex nL	IIC		IIB	
L_o [mH]	2.0	0.5	5.0	1.0
C_o [µF]	0.3	0.42	1.6	2.5

Declaration	SIL 3 acc. to EXIDA FMEDA

Indication

Switching state	yellow

Environmental Conditions

Ambient temperature	-25…+70 °C
Storage temperature	-40…+80 °C
Test voltage	2.5 kV
MTTF	363 years acc. to SN 29500 (Ed. 99) 40 °C

Mechanical data

Electrical connection	Spring terminal made of Beryllium-Bronze
Terminal cross-section	1.5 mm² / 0.75 mm² c flexible
Housing material	Polycarbonate/ABS
Mounting instruction	for DIN rail
Protection class	IP20
Flammability class acc. to UL 94	V-0
Dimensions	18 x 112 x 110 mm

Approval | Certification	ATEX, IECEx, TR CU, NEPSI

Input analog signal isolator, 1-channel

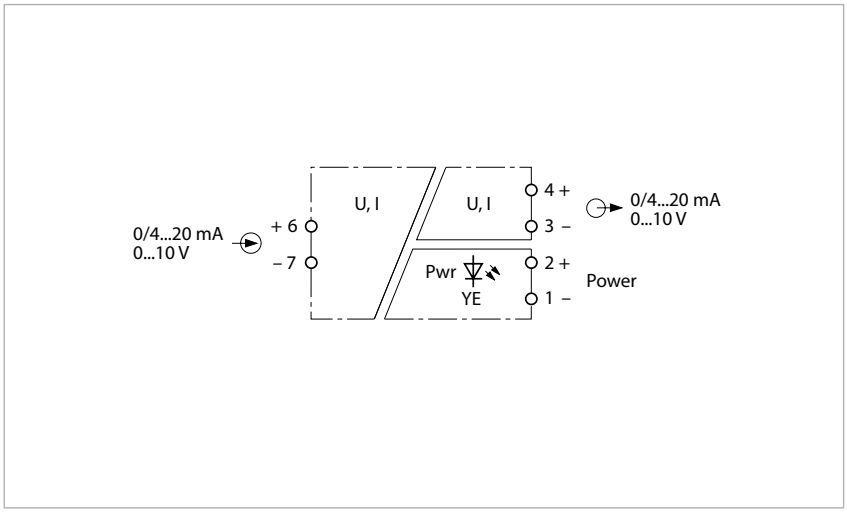

Features

- UL: Class1, Div 2, Group A, B, C, D; GOST
- Input circuit: 0/4…20 mA or 0…10 V
- Output circuit: 0/4…20 mA or 0…10 V
- Type of input and output signal adjusted via DIP switch
- Linearity < 0.1 % f.s.
- Accuracy < 0.1 % f.s.
- Complete galvanic isolation
- 6.2 mm width

Standard active voltage or current signals are transmitted galvanically isolated and converted to other signal types via the 1-channel universal analog signal isolator IMS-AI-UNI/24VDC.

The device is equipped with available input circuit of 0/4…20 mA or 0…10 V and a variable short-circuit proof output circuit of 0/4…20 mA or 0…10 V.

The transmission characteristic (for input and output signal type) is adjusted via side-mounted DIP switches. The input signals are transmitted according to the setting and made available at the output.

The green LED indicates operational readiness.

With a width of 6.2 mm, the device is galvanically isolated up to 1.5 kV.



Technical data

Type	IMS-AI-UNI/24V
Ident no.	7504009
Power supply	
Nominal voltage	24 VDC
Operating voltage range	19…29 VDC
Power consumption	≤ 0.312 W
Residual ripple	≤ 5 mV_{ss}
Inputs	
Voltage input	0/2…10 VDC
Input resistance (voltage)	≥ 330 kΩ
Current input	0/4…20 mA
Input resistance (current)	≤ 100 Ω
Outputs	
Load resistance, current output	≤ 0.4 kΩ
Load resistance voltage output	≥ 1 kΩ
Output current	0/4…20 mA
Output voltage	0…10 V
Response characteristic	
Measuring accuracy	≤ 0.1 % of full scale
Temperature drift	≤ 0.00015 % / K
Rise time (10-90%)	≤ 10 ms
Dropout time (90…10%)	≤ 10 ms
Indication	
Operational readiness	green
Environmental Conditions	
Ambient temperature	-20…+60 °C
Storage temperature	-40…+80 °C
Test voltage	1.5 kV
Mechanical data	
Tightening torque	0.5 Nm
Electrical connection	screw terminals
Terminal cross-section	2.5 mm^2
Housing material	Polycarbonate/ABS
Mounting instruction	for DIN rail
Protection class	IP20
Flammability class acc. to UL 94	V-0
Dimensions	6.2 x 114.5 x 90 mm
Approval | Certification	$_cUL_{us}$, GOST

Input analog signal isolator, 2-channel

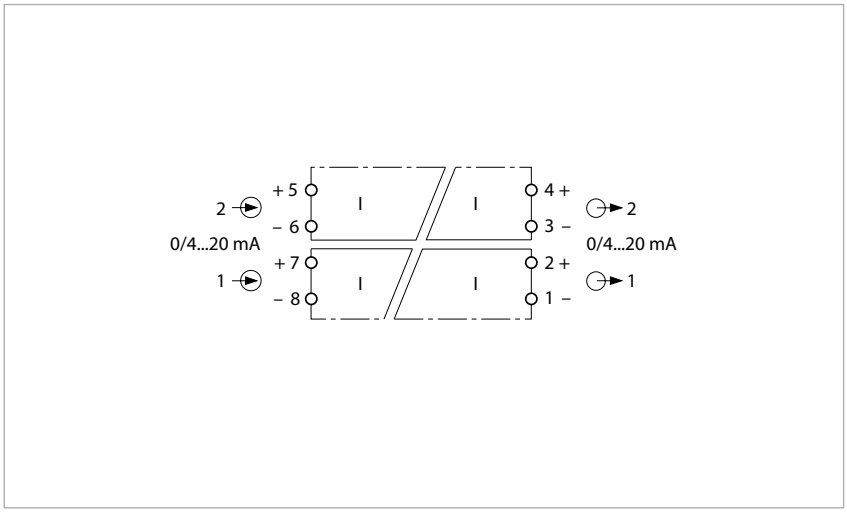

Features

- UL: Class1, Div 2, Group A, B, C, D; GOST
- Input circuits: 0/4…20 mA
- Output circuits: 0/4…20 mA
- Linearity < 0.1 % f.s.
- Accuracy < 0.1 % f.s.
- Complete galvanic isolation
- 6.2 mm width

The 2-channel analog signal isolator IMS-AI-DLI-22-DLI/L is designed to transmit normalized active current signals galvanically isolated.

The device features two input circuits 0/4…20 mA and two short-circuit proof output circuits 0/4…20 mA.

The device is loop powered, transmission starts with 250 µA. Required minimum voltage 2.8 V + (20 mA x R_{load}).

The input signals are transmitted 1:1 and are presented to the relevant output.

The device is loop-powered. Separate power supply is not necessary.



Technical data

Type	IMS-AI-DLI-22-DLI/L
Ident no.	7504011
Power supply	
Nominal voltage	24 VDC loop-powered
Power consumption	≤ 0.312 W
Residual ripple	≤ 5 mV_{ss}
Inputs	
Voltage input	max. 29 VDC
Current input	0/4…20 mA
Input resistance (current)	≤ 100 Ω
Outputs	
Load resistance, current output	≤ 0.4 kΩ
Output current	0/4…20 mA
Response characteristic	
Measuring accuracy	≤ 0.1 % of full scale
Temperature drift	≤ 0.00015 % / K
Rise time (10-90%)	≤ 10 ms
Dropout time (90…10%)	≤ 10 ms
Environmental Conditions	
Ambient temperature	-20…+60 °C
Storage temperature	-40…+80 °C
Test voltage	1.5 kV
Mechanical data	
Tightening torque	0.5 Nm
Electrical connection	screw terminals
Terminal cross-section	2.5 mm^2
Housing material	Polycarbonate/ABS
Mounting instruction	for DIN rail
Protection class	IP20
Flammability class acc. to UL 94	V-0
Dimensions	6.2 x 114.5 x 90 mm
Approval | Certification	$_cUL_{us}$, GOST

Temperature measuring amplifier, 1-channel

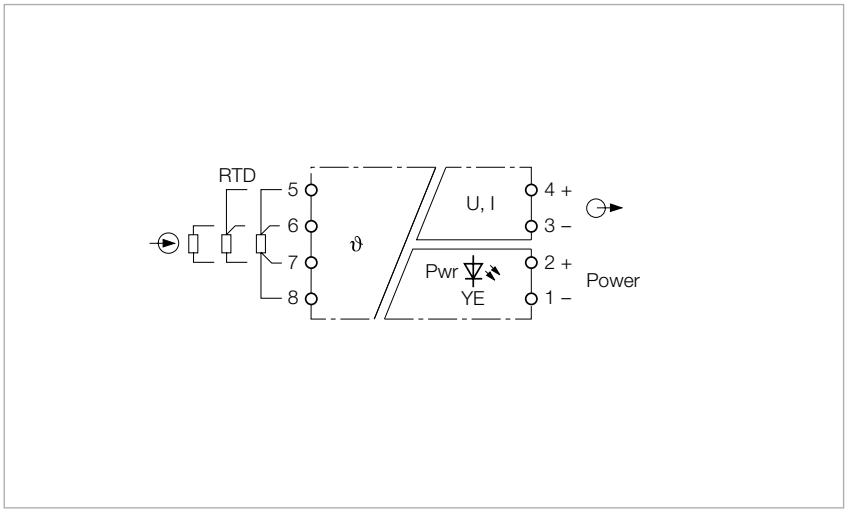

Features

- UL: Class1, Div2, Group A, B, C, D; GOST
- Connection of temperature probes Pt100
- Output circuit: 0/4…20 mA or 0…10 V
- Linearity < 0.1 % f.s.
- Accuracy < 0.3 % f.s.
- Complete galvanic isolation
- 6.2 mm width

The 1-channel temperature measuring amplifier IMS-TI-Pt100/24V is designed to evaluate the temperature-dependent changes of Pt100 RTDs, to isolate them galvanically and to output them as temperature-linear voltage or current signals of 0…10 V, 0…20 mA or 4…20 mA.

Alternatively, Pt100 RTDs in 2, 3 or 4-wire technology can also be operated at the input circuit of the measuring amplifier.

The number of Pt100 wires, the transmission characteristic (0…20 mA, 4…20 mA or 0…10 V) as well as the measuring range are adjusted via DIP switch.

Wire-break and short-circuit are detected. In the event of error, 12 V or 22 mA are provided at the output and the error is additionally signalled by the flashing power LED.

The following measuring ranges can be adjusted:

- -50…+150 °C
- 0…+100 °C
- 0…+200 °C

In the event of error (wire-break or short-circuit), 12 V or 22 mA are provided at the output and the error is additionally signalled by the flashing power LED.
The IM34 temperature measuring amplifiers from TURCK offer more solutions for applications with other measuring ranges and temperature probes.



Technical data

Type	IMS-TI-PT100/24V
Ident no.	7504012
Power supply	
Nominal voltage	24 VDC
Operating voltage range	19…29 VDC
Power consumption	≤ 0.32 W
Residual ripple	≤ 5 mV_{ss}
Inputs	
Pt100	-50…150°C; 0…100°C; 0…200°C
Input resistance (voltage)	≥ 1000 kΩ
Outputs	
Load resistance, current output	≤ 0.4 kΩ
Load resistance voltage output	≥ 1 kΩ
Output current	0/4…20 mA
Output voltage	0…10 V
Response characteristic	
Measuring accuracy	≤ 0.3 % of full scale
Temperature drift	≤ 0.00015 % / K
Rise time (10-90%)	≤ 30 ms
Dropout time (90…10%)	≤ 30 ms
Indication	
Operational readiness	green
Environmental Conditions	
Ambient temperature	-20…+60 °C
Storage temperature	-40…+80 °C
Test voltage	1.5 kV
Mechanical data	
Tightening torque	0.5 Nm
Electrical connection	screw terminals
Terminal cross-section	2.5 mm^2
Housing material	Polycarbonate/ABS
Mounting instruction	for DIN rail
Protection class	IP20
Flammability class acc. to UL 94	V-0
Dimensions	6.2 x 114.5 x 90 mm
Approval | Certification	$_cUL_{us}$, GOST

Surge protection – 1 floating signal circuit

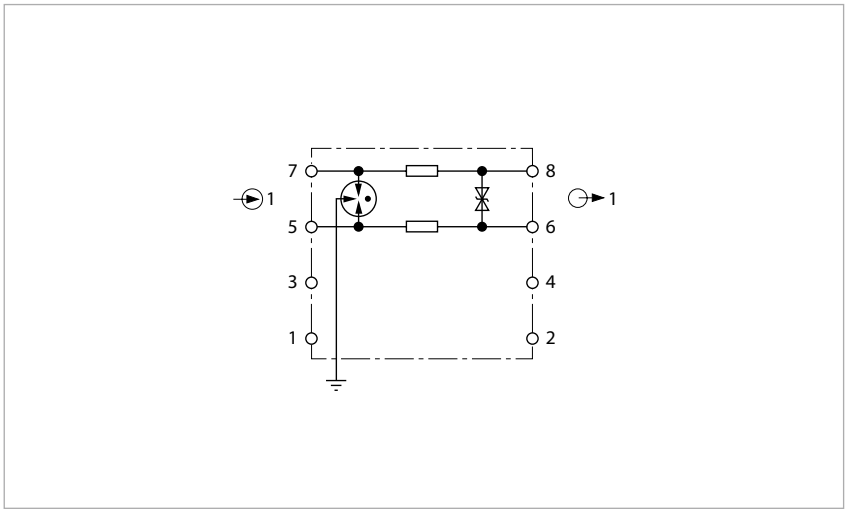

Features

- ATEX, IECEx, UL
- Nominal voltage 24 VDC
- For one floating 2-wire signal circuit
- IEC category: C1 / C2 / C3 / D1
- Flammability class V-0
- HART® transmissible

The IMSP-1X2-24 is a surge protection module, designed for the MSR technology. It protects one floating 2-wire signal circuit.

The HART® transmissible devices are IP20 rated and can be installed in Ex as well as non-Ex areas.

The only 6.2 mm slim housing can be mounted on DIN rail acc. to DIN NS35.

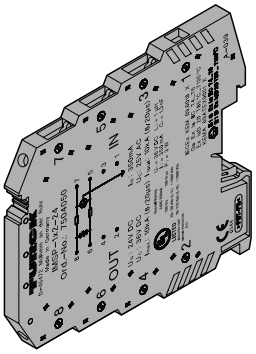

Technical data

Type	IMSP-1x2-24
Ident no.	7504050
Nominal voltage U_n	24 VDC
IEC category	C1; C2; C3; D1
Surge arrester, rated voltage U_c	25 VAC / 36 VDC
Nominal current In (≤ 40 °C)	350 mA
Active current I_c with given U_c	2 µA
Leakage current acc. to PE with given U_c	2 µA
Nominal discharge surge current I_n (8/20) µs (core-core)	5 kA
Nominal discharge surge current I_n (8/20) µs (core-ground)	5 kA
Total surge current (8/20) µs	20 kA
Total surge current (10/350) µs	1 kA
Discharge surge current I_{max} (8/20)µs (core-to-core)	10 kA
Discharge surge current I_{max} (8/20)µs (core-to-earth)	10 kA
Nominal pulse current I_{an} (10/1000) µs (core-core)	50 A
Nominal pulse current I_{an} (10/1000) µs (core-ground)	50 A
Lightning test current (10/350)µs, peak current I_{imp}	500 A
Output voltage limitation 1kV/µs (core-to-core)	≤ 60 V
Output voltage limitation 1kV/µs (core-to-earth)	≤ 650 V
Residual voltage I_n (core-to-core)	≤ 70 V
Residual voltage I_{an} (core-to-core)	≤ 50 V
Protection level U_p C2 - 10 kV/5 kA (core-core)	≤ 70 V (C2 - 10 kV / 5 kA)
Protection level U_p C3 - 10 A (core-core)	≤ 50 V (C3 - 10 A)
Protection level U_p D1 - 500 A (core-core)	≤ 80 V (D1 - 500 A)
Protection level U_p C1 - 500 V/250 A (core-ground)	≤ 650 V (C1 - 500 V / 250 A)
Protection level U_p C2 - 10 kV/5 kA (core-ground)	≤ 700 V (C2 - 10kV / 5 kA)
Protection level U_p D1 - 500 A (core-ground)	≤700 V (D1 - 500 A)
Response time tA (core-to-core)	≤ 1 ns
Response time tA (core-to-earth)	≤ 100 ns
Insertion loss aE, sym.	Typ 0.7 dB (1 MHz / 50 Ω)
Insertion loss aE, sym.	Typ. 0.3 dB (350 MHz / 150Ω)
Cutoff frequency fg (3dB), asym. (GND) 50 Ω system	Typ. 6 MHz
Cutoff frequency fg (3dB), asym. (GND) 150 Ω system	Typ. 2 MHz
Capacitance	≤1.3 nF (per path)
Resistance per path	3.3 Ω 20 %
Required backup fuse, max.	315 mA
Surge protection acc. to IEC 61643-21 (core-to-core)	C2 (10 kV / 5 kA); C3 (25 A)
Surge protection acc. to IEC 61643-21 (core-to-earth)	C2 (10 kV / 5 kA); C3 (25 A); D1 (500 A)
AC protection acc. to IEC 61643-21	5 A - 1 s
Standards for air and creepage distances	IEC 60664-1 / EN 60079-11
Standards/Regulations	IEC 61643-21 /DIN EN 61643-21

Approvals and declarations	
Ex approval acc. to conformity certificate	DEKRA 11 ATEX 0016 X
Device designation	Ⓔx II 1 G, II 1 D Ex ia IIC T4…T6; Ex iaD 20 T85°C…T135°C
Max. values:	Terminal connection: 5+7 / 6+8
Max. input voltage U_i	≤ 36 V
Max. input current I_i	≤ 350 mA
Max. input power P_i	≤ 3000 mW
Internal inductance/capacitance L_i/C_i	L_i = 1 µH; C_i = 1.3 nF
Declaration	SIL 2 acc. to EXIDA FMEDA
Environmental Conditions	
Ambient temperature	-40…+80 °C
Storage temperature	-40…+80 °C
Mechanical data	
Tightening torque	0.8 Nm
Electrical connection	screw terminals
Terminal cross-section	2.5 mm²
Housing material	plastic
Mounting instruction	for DIN rail
Protection class	IP20
Flammability class acc. to UL 94	V-0
Dimensions	6.2 x 93.1 x 102.5 mm
Approval | Certification	ATEX, IECEx, UL

Surge protection – 2 floating signal wires

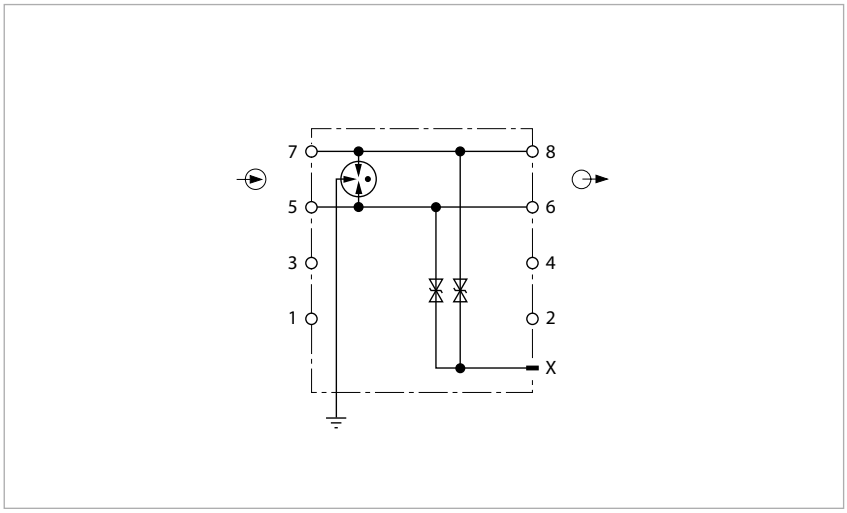

Features

- ATEX, IECEx, UL
- Nominal voltage 12 VDC
- For 2 floating signal conductors
- IEC category: C1 / C2 / C3 / D1
- Flammability class V-0

The IMSP-2-12 is a surge protection module, designed for the MSR technology. It protects two 12 V operated floating signal conductors.

The devices are IP20 protected and can be installed in Ex as well as non-Ex areas.

The only 6.2 mm slim housing can be mounted on DIN rail acc. to DIN NS35.

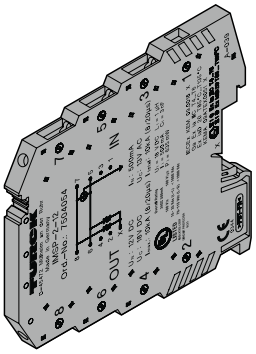

Technical data

Type	IMSP-2-12
Ident no.	7504054
Nominal voltage U_n	12 VDC
IEC category	C1; C2; C3; D1
Surge arrester, rated voltage U_c	13 VAC / 18 VDC
Nominal current In (≤ 40 °C)	500 mA
Active current I_c with given U_c	2 µA (per path)
Leakage current acc. to PE with given U_c	2 µA
Nominal discharge surge current I_n (8/20) µs (core-core)	350 A
Nominal discharge surge current I_n (8/20) µs (core-ground)	5 kA
Total surge current (8/20) µs	20 kA
Total surge current (10/350) µs	1 kA
Discharge surge current I_{max} (8/20)µs (core-to-core)	350 A
Discharge surge current I_{max} (8/20)µs (core-to-earth)	10 kA
Nominal pulse current I_{an} (10/1000) µs (core-core)	70 A
Nominal pulse current I_{an} (10/1000) µs (core-ground)	50 A
Lightning test current (10/350)µs, peak current I_{imp}	500 A
Output voltage limitation 1kV/µs (core-to-core)	≤ 50 V
Output voltage limitation 1kV/µs (core-to-earth)	≤ 650 V
Residual voltage I_n (core-to-core)	≤ 50 V
Residual voltage I_{an} (core-to-core)	≤ 50 V
Protection level U_p C1 - 500 V/250 A (core-core)	≤ 50 V (C1-500 V / 250 A)
Protection level U_p C1 - 500 V/250 A (core-ground)	≤ 650 V (C1 - 500 V / 250 A)
Protection level U_p C2 - 10 kV/5 kA (core-ground)	≤ 650 V (C2 - 10 kV / 5 kA)
Protection level U_p D1 - 500 A (core-ground)	≤700 V (D1 - 500 A)
Response time tA (core-to-core)	≤ 1 ns
Response time tA (core-to-earth)	≤ 100 ns
Insertion loss aE, sym.	Typ 0.1 dB (1 MHz / 50 Ω)
Insertion loss aE, sym.	Typ. 0.1 dB (300 kHz / 150 Ω)
Cutoff frequency fg (3dB), asym. (GND) 50 Ω system	Typ. 5 MHz
Cutoff frequency fg (3dB), asym. (GND) 150 Ω system	Typ. 1.5 MHz
Capacitance	≤1.5 nF (per channel)
Resistance per path	0 Ω
Required backup fuse, max.	500 mA
Surge protection acc. to IEC 61643-21 (core-to-core)	C1 (500 V / 250 A); C3 (25 A)
Surge protection acc. to IEC 61643-21 (core-to-earth)	C2 (10 kV / 5 kA); C3 (25 A); D1 (500 A)
AC protection acc. to IEC 61643-21	5 A - 1 s
Standards for air and creepage distances	IEC 60664-1 / EN 60079-11
Standards/Regulations	IEC 61643-21 /DIN EN 61643-21

Approvals and declarations	
Ex approval acc. to conformity certificate	DEKRA 11 ATEX 0016 X
Device designation	Ⓔx II 1 G, II 1 D Ex ia IIC T4…T6; Ex iaD 20 T85°C…T135°C
Max. values:	Terminal connection: 5+7 / 6+8
Max. input voltage U_i	≤ 18 V
Max. input current I_i	≤ 500 mA
Max. input power P_i	≤ 635 mW
Internal inductance/capacitance L_i/C_i	L_i = 1 µH; C_i = 3 nF
Declaration	SIL 2 acc. to EXIDA FMEDA
Environmental Conditions	
Ambient temperature	-40…+80 °C
Storage temperature	-40…+80 °C
Mechanical data	
Tightening torque	0.8 Nm
Electrical connection	screw terminals
Terminal cross-section	2.5 mm²
Housing material	plastic
Mounting instruction	for DIN rail
Protection class	IP20
Flammability class acc. to UL 94	V-0
Dimensions	6.2 x 93.1 x 102.5 mm
Approval | Certification	ATEX, IECEx, UL

Surge protection – 2 floating signal wires

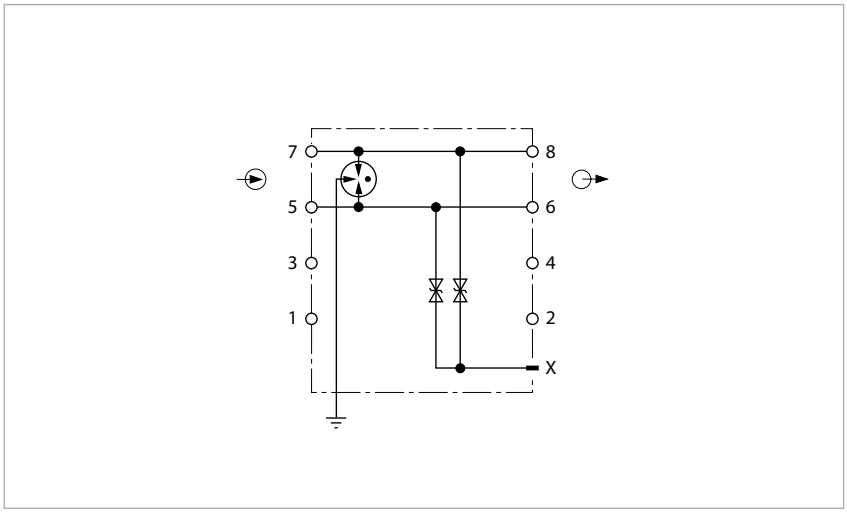

Features

- ATEX, IECEx, UL
- Nominal voltage 24 VDC
- For 2 floating signal conductors
- IEC category: C1 / C2 / C3 / D1
- Flammability class V-0

The IMSP-2-24 is a surge protection module, designed for the MSR technology. It protects two 24 V operated floating signal conductors.

The devices are IP20 protected and can be installed in Ex as well as non-Ex areas.

The only 6.2 mm slim housing can be mounted on DIN rail acc. to DIN NS35.

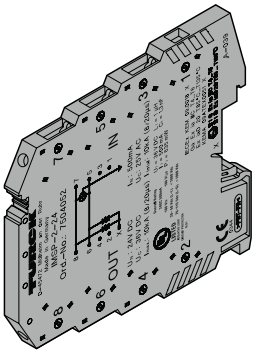

Technical data

Type	IMSP-2-24
Ident no.	7504052
Nominal voltage U_n	24 VDC
IEC category	C1; C2; C3; D1
Surge arrester, rated voltage U_c	25 VAC / 36 VDC
Nominal current In (≤ 40 °C)	500 mA
Active current I_c with given U_c	2 µA (per path)
Leakage current acc. to PE with given U_c	2 µA
Nominal discharge surge current I_n (8/20) µs (core-core)	250 A
Nominal discharge surge current I_n (8/20) µs (core-ground)	5 kA
Total surge current (8/20) µs	10 kA
Total surge current (10/350) µs	1 kA
Discharge surge current I_{max} (8/20)µs (core-to-core)	250 A
Discharge surge current I_{max} (8/20)µs (core-to-earth)	10 kA
Nominal pulse current I_{an} (10/1000) µs (core-core)	50 A
Nominal pulse current I_{an} (10/1000) µs (core-ground)	50 A
Lightning test current (10/350)µs, peak current I_{imp}	500 A
Output voltage limitation 1kV/µs (core-to-core)	≤ 60 V
Output voltage limitation 1kV/µs (core-to-earth)	≤ 650 V
Residual voltage I_n (core-to-core)	≤ 60 V
Residual voltage I_{an} (core-to-core)	≤ 60 V
Protection level U_p C1 - 500 V/250 A (core-core)	≤ 60 V (C1 - 500 V / 250 A)
Protection level U_p C3 - 10 A (core-core)	≤ 60 V (C3 - 10 A)
Protection level U_p C1 - 500 V/250 A (core-ground)	≤ 650 V (C1 - 500 V / 250 A)
Protection level U_p C2 - 10 kV/5 kA (core-ground)	≤ 650 V (C2 - 10 kV / 5 kA)
Protection level U_p D1 - 500 A (core-ground)	≤700 V (D1 - 500 A)
Response time tA (core-to-core)	≤ 1 ns
Response time tA (core-to-earth)	≤ 100 ns
Insertion loss aE, sym.	Typ 0.1 dB (1 MHz / 50 Ω)
Insertion loss aE, sym.	Typ. 0.1 dB (450 kHz / 150 Ω)
Cutoff frequency fg (3dB), asym. (GND) 50 Ω system	Typ. 7.5 MHz
Cutoff frequency fg (3dB), asym. (GND) 100 Ω system	Typ. 2.5 MHz
Capacitance	≤1.3 nF (per path)
Resistance per path	0 Ω
Required backup fuse, max.	500 mA
Surge protection acc. to IEC 61643-21 (core-to-core)	C1 (500 V / 250 A); C3 (25 A)
Surge protection acc. to IEC 61643-21 (core-to-earth)	C2 (10 kV / 5 kA); C3 (25 A); D1 (500 A)
AC protection acc. to IEC 61643-21	5 A - 1 s
Standards for air and creepage distances	IEC 60664-1 / EN 60079-11
Standards/Regulations	IEC 61643-21 /DIN EN 61643-21

Approvals and declarations	
Ex approval acc. to conformity certificate	DEKRA 11 ATEX 0016 X
Device designation	Ⓔx II 1 G, II 1 D Ex ia IIC T4…T6; Ex iaD 20 T85°C…T135°C
Max. values:	Terminal connection: 5+7 / 6+8
Max. input voltage U_i	≤ 36 V
Max. input current I_i	≤ 500 mA
Max. input power P_i	≤ 635 mW
Internal inductance/capacitance L_i/C_i	L_i = 1 µH; C_i = 1.3 nF
Declaration	SIL 2 acc. to EXIDA FMEDA
Environmental Conditions	
Ambient temperature	-40…+80 °C
Storage temperature	-40…+80 °C
Mechanical data	
Tightening torque	0.8 Nm
Electrical connection	screw terminals
Terminal cross-section	2.5 mm²
Housing material	plastic
Mounting instruction	for DIN rail
Protection class	IP20
Flammability class acc. to UL 94	V-0
Dimensions	6.2 x 93.1 x 102.5 mm
Approval | Certification	ATEX, IECEx, UL

Surge protection – 2 floating signal circuits

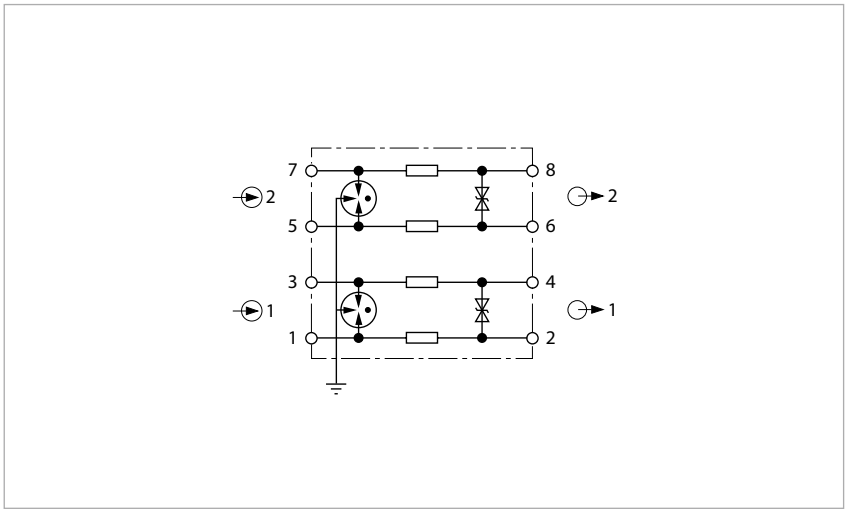

Features

- ATEX, IECEx, UL
- Nominal voltage 24 VDC
- For two floating 2-wire signal circuits
- IEC category: C1 / C2 / C3 / D1
- Flammability class V-0
- HART® transmissible

The IMSP-2X2-24 is a surge protection module, designed for the MSR technology. It protects two floating 2-wire signal circuits.

The HART® transmissible devices are IP20 rated and can be installed in Ex as well as non-Ex areas.

The only 6.2 mm slim housing can be mounted on DIN rail acc. to DIN NS35.

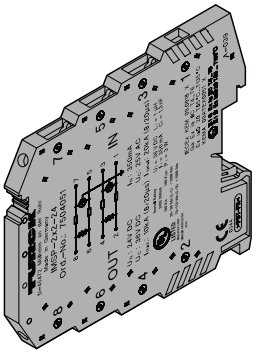

Technical data

Type	IMSP-2x2-24
Ident no.	7504051
Nominal voltage U_n	24 VDC
IEC category	C1; C2; C3; D1
Surge arrester, rated voltage U_c	25 VAC / 36 VDC
Nominal current In (≤ 40 °C)	350 mA
Active current I_c with given U_c	2 µA
Leakage current acc. to PE with given U_c	4 µA
Nominal discharge surge current I_n (8/20) µs (core-core)	5 kA
Nominal discharge surge current I_n (8/20) µs (core-ground)	5 kA
Total surge current (8/20) µs	20 kA
Total surge current (10/350) µs	2 kA
Discharge surge current I_{max} (8/20)µs (core-to-core)	10 kA
Discharge surge current I_{max} (8/20)µs (core-to-earth)	10 kA
Nominal pulse current I_{an} (10/1000) µs (core-core)	50 A
Nominal pulse current I_{an} (10/1000) µs (core-ground)	50 A
Lightning test current (10/350)µs, peak current I_{imp}	500 A
Output voltage limitation 1kV/µs (core-to-core)	≤ 60 V
Output voltage limitation 1kV/µs (core-to-earth)	≤ 650 V
Residual voltage I_n (core-to-core)	≤ 70 V
Residual voltage I_{an} (core-to-core)	≤ 50 V
Protection level U_p C2 - 10 kV/5 kA (core-core)	≤ 70 V (C2 - 10 kV / 5 kA)
Protection level U_p C3 - 10 A (core-core)	≤ 50 V (C3 - 10 A)
Protection level U_p D1 - 500 A (core-core)	≤ 80 V (D1 - 500 A)
Protection level U_p C1 - 500 V/250 A (core-ground)	≤ 650 V (C1 - 500 V / 250 A)
Protection level U_p C2 - 10 kV/5 kA (core-ground)	≤ 700 V (C2 - 10kV / 5 kA)
Protection level U_p D1 - 500 A (core-ground)	≤700 V (D1 - 500 A)
Response time tA (core-to-core)	≤ 1 ns
Response time tA (core-to-earth)	≤ 100 ns
Insertion loss aE, sym.	Typ 0.7 dB (1 MHz / 50 Ω)
Insertion loss aE, sym.	Typ. 0.3 dB (350 MHz / 150Ω)
Cutoff frequency fg (3dB), asym. (GND) 50 Ω system	Typ. 6 MHz
Cutoff frequency fg (3dB), asym. (GND) 150 Ω system	Typ. 2 MHz
Capacitance	≤1.3 nF (per path)
Resistance per path	3.3 Ω 20 %
Required backup fuse, max.	315 mA
Surge protection acc. to IEC 61643-21 (core-to-core)	C2 (10 kV / 5 kA); C3 (25 A)
Surge protection acc. to IEC 61643-21 (core-to-earth)	C2 (10 kV / 5 kA); C3 (25 A); D1 (500 A)
AC protection acc. to IEC 61643-21	5 A - 1 s
Standards for air and creepage distances	IEC 60664-1 / EN 60079-11
Standards/Regulations	IEC 61643-21 /DIN EN 61643-21

Approvals and declarations	
Ex approval acc. to conformity certificate	DEKRA 11 ATEX 0016 X
Device designation	Ⓔx II 1 G, II 1 D Ex ia IIC T4…T6; Ex iaD 20 T85°C…T135°C
Max. values:	Terminal connection: 1…8
Max. input voltage U_i	≤ 36 V
Max. input current I_i	≤ 350 mA
Max. input power P_i	≤ 3000 mW
Internal inductance/capacitance L_i/C_i	L_i = 1 µH; C_i = 1.3 nF
Declaration	SIL 2 acc. to EXIDA FMEDA
Environmental Conditions	
Ambient temperature	-40…+80 °C
Storage temperature	-40…+80 °C
Mechanical data	
Tightening torque	0.8 Nm
Electrical connection	screw terminals
Terminal cross-section	2.5 mm²
Housing material	plastic
Mounting instruction	for DIN rail
Protection class	IP20
Flammability class acc. to UL 94	V-0
Dimensions	6.2 x 93.1 x 102.5 mm
Approval | Certification	ATEX, IECEx, UL

Surge protection – 4 floating signal wires

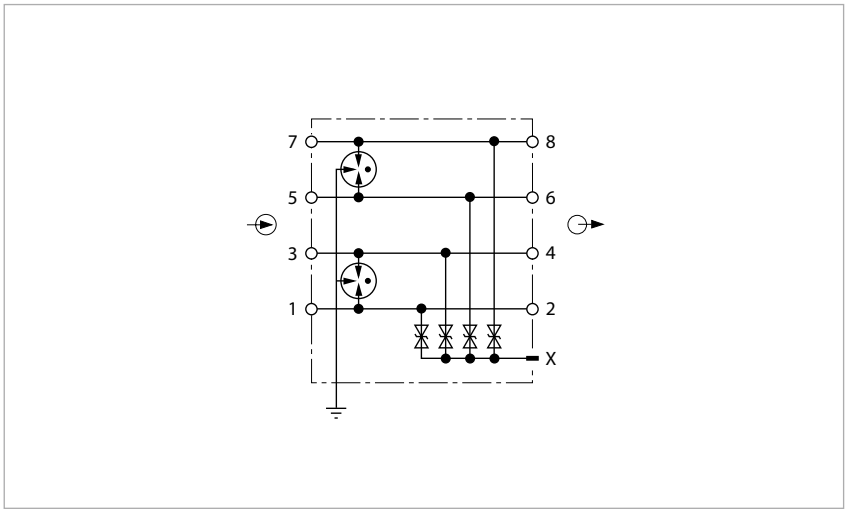

Features

- ATEX, IECEx, UL
- Nominal voltage 24 VDC
- For 4 floating signal conductors
- IEC category: C1 / C2 / C3 / D1
- Flammability class V-0

The IMSP-4-24 is a surge protection module, designed for the MSR technology. It protects four 24 V operated floating signal conductors.

The devices are IP20 protected and can be installed in Ex as well as non-Ex areas.

The only 6.2 mm slim housing can be mounted on DIN rail acc. to DIN NS35.

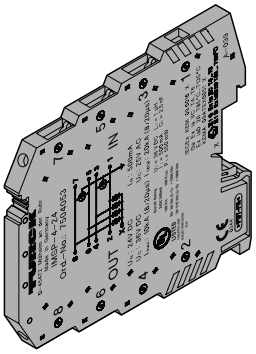

Technical data

Type	IMSP-4-24
Ident no.	7504053
Nominal voltage U_n	24 VDC
IEC category	C1; C2; C3; D1
Surge arrester, rated voltage U_c	25 VAC / 36 VDC
Nominal current In (≤ 40 °C)	500 mA
Active current I_c with given U_c	2 µA (per path)
Leakage current acc. to PE with given U_c	4 µA
Nominal discharge surge current I_n (8/20) µs (core-core)	250 A
Nominal discharge surge current I_n (8/20) µs (core-ground)	5 kA
Total surge current (8/20) µs	20 kA
Total surge current (10/350) µs	2 kA
Discharge surge current I_{max} (8/20)µs (core-to-core)	250 A
Discharge surge current I_{max} (8/20)µs (core-to-earth)	10 kA
Nominal pulse current I_{an} (10/1000) µs (core-core)	50 A
Nominal pulse current I_{an} (10/1000) µs (core-ground)	50 A
Lightning test current (10/350)µs, peak current I_{imp}	500 A
Output voltage limitation 1kV/µs (core-to-core)	≤ 60 V
Output voltage limitation 1kV/µs (core-to-earth)	≤ 650 V
Residual voltage I_n (core-to-core)	≤ 60 V
Residual voltage I_{an} (core-to-core)	≤ 60 V
Protection level U_p C1 - 500 V/250 A (core-core)	≤ 60 V (C1 - 500 V / 250 A)
Protection level U_p C3 - 10 A (core-core)	≤ 60 V (C3 - 10 A)
Protection level U_p C1 - 500 V/250 A (core-ground)	≤ 650 V (C1 - 500 V / 250 A)
Protection level U_p C2 - 10 kV/5 kA (core-ground)	≤ 650 V (C2 - 10 kV / 5 kA)
Protection level U_p D1 - 500 A (core-ground)	≤700 V (D1 - 500 A)
Response time tA (core-to-core)	≤ 1 ns
Response time tA (core-to-earth)	≤ 100 ns
Insertion loss aE, sym.	Typ 0.1 dB (1 MHz / 50 Ω)
Insertion loss aE, sym.	Typ. 0.1 dB (450 kHz / 150 Ω)
Cutoff frequency fg (3dB), asym. (GND) 50 Ω system	Typ. 7.5 MHz
Cutoff frequency fg (3dB), asym. (GND) 100 Ω system	Typ. 2.5 MHz
Capacitance	≤1.3 nF (per path)
Resistance per path	0 Ω
Required backup fuse, max.	500 mA
Surge protection acc. to IEC 61643-21 (core-to-core)	C1 (500 V / 250 A); C3 (25 A)
Surge protection acc. to IEC 61643-21 (core-to-earth)	C2 (10 kV / 5 kA); C3 (25 A); D1 (500 A)
AC protection acc. to IEC 61643-21	5 A - 1 s
Standards for air and creepage distances	IEC 60664-1 / EN 60079-11
Standards/Regulations	IEC 61643-21 /DIN EN 61643-21

Approvals and declarations	
Ex approval acc. to conformity certificate	DEKRA 11 ATEX 0016 X
Device designation	Ⓔx II 1 G, II 1 D Ex ia IIC T4…T6; Ex iaD 20 T85°C…T135°C
Max. values:	Terminal connection: 1…8
Max. input voltage U_i	≤ 36 V
Max. input current I_i	≤ 500 mA
Max. input power P_i	≤ 550 mW
Internal inductance/capacitance L_i/C_i	L_i = 1 µH; C_i = 2.5 nF
Declaration	SIL 2 acc. to EXIDA FMEDA
Environmental Conditions	
Ambient temperature	-40…+80 °C
Storage temperature	-40…+80 °C
Mechanical data	
Tightening torque	0.8 Nm
Electrical connection	screw terminals
Terminal cross-section	2.5 mm²
Housing material	plastic
Mounting instruction	for DIN rail
Protection class	IP20
Flammability class acc. to UL 94	V-0
Dimensions	6.2 x 93.1 x 102.5 mm
Approval | Certification	ATEX, IECEx, UL

Surge protection – 4 floating signal wires

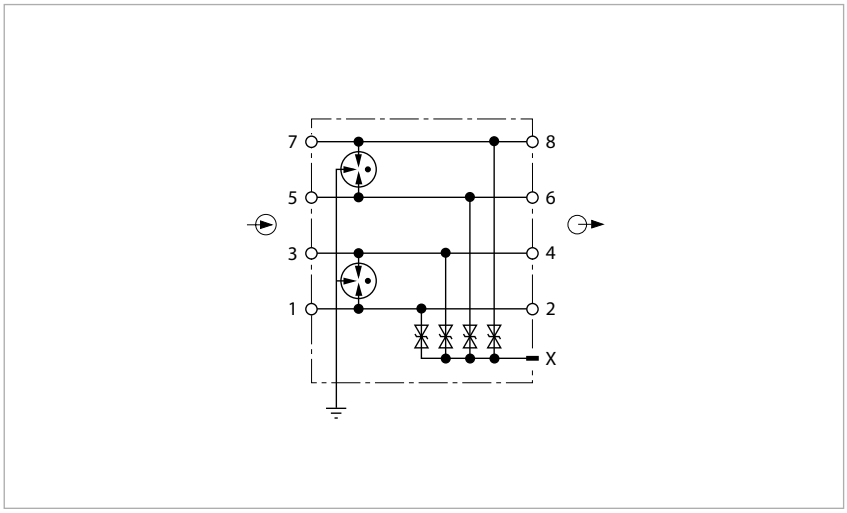

Features

- ATEX, IECEx, UL
- Nominal voltage 12 VDC
- For 4 floating signal conductors
- IEC category: C1 / C2 / C3 / D1
- Flammability class V-0

The IMSP-4-12 is a surge protection module, designed for the MSR technology. It protects four 12 V operated floating signal conductors.

The devices are IP20 protected and can be installed in Ex as well as non-Ex areas.

The only 6.2 mm slim housing can be mounted on DIN rail acc. to DIN NS35.

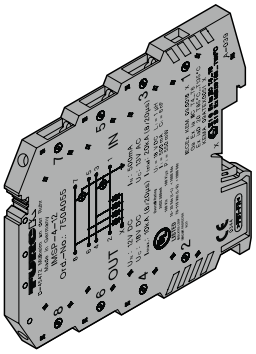

Technical data

Type	IMSP-4-12
Ident no.	7504055
Nominal voltage U_n	12 VDC
IEC category	C1; C2; C3; D1
Surge arrester, rated voltage U_c	13 VAC / 18 VDC
Nominal current In (≤ 40 °C)	500 mA
Active current I_c with given U_c	2 µA (per path)
Leakage current acc. to PE with given U_c	4 µA
Nominal discharge surge current I_n (8/20) µs (core-core)	350 A
Nominal discharge surge current I_n (8/20) µs (core-ground)	5 kA
Total surge current (8/20) µs	20 kA
Total surge current (10/350) µs	2 kA
Discharge surge current I_{max} (8/20)µs (core-to-core)	350 A
Discharge surge current I_{max} (8/20)µs (core-to-earth)	10 kA
Nominal pulse current I_{an} (10/1000) µs (core-core)	70 A
Nominal pulse current I_{an} (10/1000) µs (core-ground)	50 A
Lightning test current (10/350)µs, peak current I_{imp}	500 A
Output voltage limitation 1kV/µs (core-to-core)	≤ 50 V
Output voltage limitation 1kV/µs (core-to-earth)	≤ 650 V
Residual voltage I_n (core-to-core)	≤ 50 V
Residual voltage I_{an} (core-to-core)	≤ 50 V
Protection level U_p C1 - 500 V/250 A (core-core)	≤ 50 V (C1-500 V / 250 A)
Protection level U_p C3 - 10 A (core-core)	≤ 50 V (C3 - 10 A)
Protection level U_p C1 - 500 V/250 A (core-ground)	≤ 650 V (C1 - 500 V / 250 A)
Protection level U_p C2 - 10 kV/5 kA (core-ground)	≤ 650 V (C2 - 10 kV / 5 kA)
Protection level U_p D1 - 500 A (core-ground)	≤700 V (D1 - 500 A)
Response time tA (core-to-core)	≤ 1 ns
Response time tA (core-to-earth)	≤ 100 ns
Insertion loss aE, sym.	Typ 0.1 dB (1 MHz / 50 Ω)
Insertion loss aE, sym.	Typ. 0.1 dB (300 kHz / 150 Ω)
Cutoff frequency fg (3dB), asym. (GND) 50 Ω system	Typ. 5 MHz
Cutoff frequency fg (3dB), asym. (GND) 150 Ω system	Typ. 1.5 MHz
Capacitance	≤1.5 nF (per channel)
Resistance per path	0 Ω
Required backup fuse, max.	500 mA
Surge protection acc. to IEC 61643-21 (core-to-core)	C1 (500 V / 250 A); C3 (25 A)
Surge protection acc. to IEC 61643-21 (core-to-earth)	C2 (10 kV / 5 kA); C3 (25 A); D1 (500 A)
AC protection acc. to IEC 61643-21	5 A - 1 s
Standards for air and creepage distances	IEC 60664-1 / EN 60079-11
Standards/Regulations	IEC 61643-21 /DIN EN 61643-21

Approvals and declarations	
Ex approval acc. to conformity certificate	DEKRA 11 ATEX 0016 X
Device designation	Ⓔx II 1 G, II 1 D Ex ia IIC T4…T6; Ex iaD 20 T85°C…T135°C
Max. values:	Terminal connection: 1…8
Max. input voltage U_i	≤ 18 V
Max. input current I_i	≤ 500 mA
Max. input power P_i	≤ 550 mW
Internal inductance/capacitance L_i/C_i	L_i = 1 µH; C_i = 6 nF
Declaration	SIL 2 acc. to EXIDA FMEDA
Environmental Conditions	
Ambient temperature	-40…+80 °C
Storage temperature	-40…+80 °C
Mechanical data	
Tightening torque	0.8 Nm
Electrical connection	screw terminals
Terminal cross-section	2.5 mm²
Housing material	plastic
Mounting instruction	for DIN rail
Protection class	IP20
Flammability class acc. to UL 94	V-0
Dimensions	6.2 x 93.1 x 102.5 mm
Approval | Certification	ATEX, IECEx, UL

IMC – Interface module cartridge



IMC – Distributed interface technology in IP67

With the highly compact and rugged devices of the IMC series the Ex junction plane can be moved from the control cabinet directly into the field, thus providing more flexibility to the system. The vibration resistant connectors of the IP67 modules ensure safe and reliable operation, even under harsh environmental conditions In addition to the galvanic isolation, the devices provide "intrinsically safe" explosion protection. Field use is made possible by means of approval to 3 GD, i.e. allows use in zone 2/22 potentially explosive areas caused by combustible dusts or gases (only permissible in combination with the IMC-SG protective housing).

le cartridge

Typ	Ident-Nr.	Beschreibung	Seite
IMC-Di-22Ex-PNO/24VDC	7560003	Isolating switching amplifier, 2-channel	486
IMC-DI-22EX-PNC/24VDC	7560010	Isolating switching amplifier, 2-channel	488
IMC-DO-11EX/L	7560008	Solonoid driver, 1-channel	490
IMC-AI-11EX-I/L	7560004	Input analog signal isolator, 1-channel	492
IMC-AIA-11EX-I/24VDC	7560009	Isolating transducer, 1-channel	494
IMC-AO-11EX-I/L	7560006	Ouput analog signal isolator, 1-channel	496

Our Strengths – Your Advantages



Protection class IP67

The Interface module cartridge (IMC) series opens up new possibilities in the field of process automation: The IS barrier is moved from the control cabinet directly to the installation, thus making it possible to create further decentralized structures in the installation. The use of distributed IMC modules – in parallel with the standard control cabinet solutions – provides additional flexibility for the installation. The IMC modules are highly compact, rugged and IP67 rated. The vibration resistant connectors ensure safe and reliable operation, even under harsh environmental conditions.



Installation in Ex zone 2/22

In addition to the galvanic isolation, the devices provide "intrinsically safe" explosion protection. Field use is made possible by means of approval to 3 GD, i.e. allows use in in explosion hazardous areas (zone 2) with combustible dusts or gases. Different lengths of connection cables are available. The IS cables are provided with premolded connectors at one end. Note: Use in zone 2 is only permissible in combination with the IMC-SG protective housing (can be ordered as a separate accessory).



Wide range of functions

The Interface module cartridge (IMC) series offers a selection of modules with intrinsically safe input/output circuits for different functions and normalized signals in distributed applications. The IMC series with protection to IP67 includes 2-channel isolating switching amplifiers, analog signal isolators with 0…20 mA analog input/output circuits, isolating transducers with a 0…20 mA analog output circuit as well as valve control modules.



Plug-and-play with M12 connectors

The modules of the IMC series are equipped with standard M12 connectors for the electrical connection. This enables the interface devices to be installed and commissioned simply and safely using plug-and-play.

Type code

IMC DI - 2 2 Ex - PNO / 24VDC

IMC Design
- **IMC** Interface modul cartridge

DI Functional principle
- **DI** isolating switching amplifier with line monitoring
- **SG** additional protection for IMC housing
- **AI** analog input amplifier
- **AIA** isolating transducer
- **AO** analog output amplifier
- **DO** digital output/solonoid driver

- **2** **2** Number of channels

Number of channels on control side
- **1** one output channel
- **2** two output channels

Number of channels on field side
- **1** one input channel
- **2** two input channels

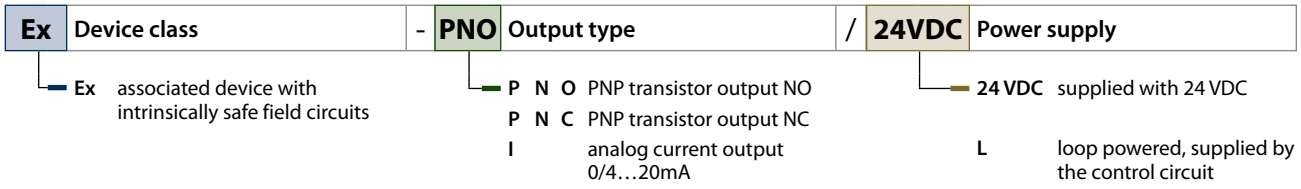
Ex
Device class
-
PNO
Output type
/
24VDC
Power supply
Ex associated device with intrinsically safe field circuits
P N O PNP transistor output NO
P N C PNP transistor output NC
I analog current output 0/4…20mA
24 VDC supplied with 24 VDC
L loop powered, supplied by the control circuit

Isolating switching amplifier, 2-channel

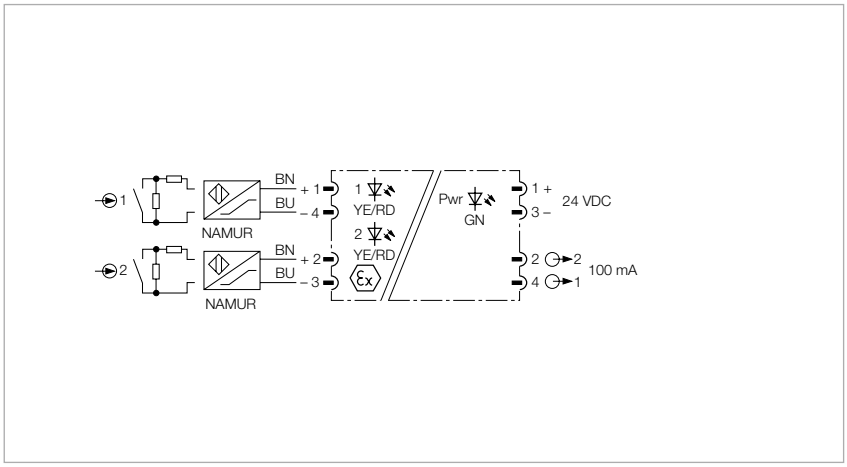

Features

- ATEX, IECEx, TR CU
- Installation in zone 2/22
- Isolating switching amplifier with M12 x 1 connectors, 2-channel
- Line monitored for wire-break/short-circuit (ON/OFF switchable)
- PNP transistor output NO
- Complete galvanic isolation
- Protection class IP67

The 2-channel isolating switching amplifier IMC-Di-22Ex-PNO/24VDC is equipped with intrinsically safe input circuits.

Sensors according to EN 60947-5-6 (NAMUR), variable resistors or potential free contactors can be connected to the device.

The output circuits feature two NO transistors. A green LED indicates operational readiness.

The device must be protected against mechanical load on connector and housing when mounted in zone 2 or 22. For this, use the TURCK cover plate IMC-SG (ident no. 7560016).

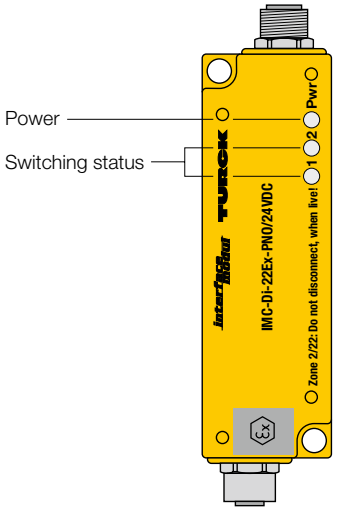

Pin assignment male M12

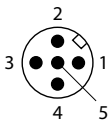

Pin assignment female M12 (intrinsically safe end)

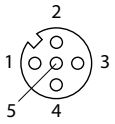

Technical data

Type	IMC-Di-22Ex-PNO/24VDC
Ident no.	7560003

Power supply

Nominal voltage	24 VDC
Operating voltage range	20…30 VDC

Inputs

No-load voltage	8.2 VDC
Short-circuit current	8.2 mA
Input resistance	1 kΩ
Cable resistance	≤ 50 Ω
Switch-on threshold:	1.55 mA
Switch-off threshold:	1.75 mA

Outputs

Output circuits (digital)	2 x transistors (pnp, short-circuit proof)
Switching voltage	≤ 30 VDC
Switching current per output	≤ 50 mA
Switching frequency	≤ 3000 Hz

Approvals and declarations

Ex approval acc. to conformity certificate	TÜV 07 ATEX 553447
Device designation	⟨Ex⟩ II (1) GD [Ex ia] IIC/IIB
Max. values:	M12 female connection: 1+4 / 1+3
Max. output voltage U_o	≤ 9.6 V
Max. output current I_o	≤ 10 mA
Max. output power P_o	≤ 24 mW
Rated voltage	250 V
Characteristic	linear
Internal inductance/capacitance L_i/C_i	L_i = 0.15 mH, C_i = negligibly small

External inductance/capacitance L_o/C_o

Ex ia	IIC		IIB	
L_o [mH]	0.85	10	1.85	20
C_o [nF]	1100	750	5300	3400

Max. output voltage U_o	≤ 9.6 V
Max. output current I_o	≤ 10 mA
Max. output power P_o	≤ 24 mW
Characteristic	linear
Internal inductance/capacitance L_i/C_i	L_i = 0.15 mH, C_i = negligibly small

External inductance/capacitance L_o/C_o

Ex nL	IIC		IIB	
L_o [mH]	5.0	0.85	10	0.85
C_o [nF]	1400	1900	6600	11000

Ex approval acc. to conformity certificate	TÜV 07 ATEX 554027 X
Application area	II 3 GD
Protection type	Ex nA [nL] IIC/IIB T4 or rather Ex tD A22 IP67 T96 °C
Max. values:	M12 female connection: 1+4 / 2+3
Max.output voltage U_o	≤ 9.6 V
Max. output current I_o	≤ 10 mA
Max. output power P_o	≤ 24 mW
Characteristic	linear
Internal inductance/capacitance L_i/C_i	L_i = 0.15 mH, C_i = negligibly small

External inductance/capacitance L_o/C_o

Ex nL	IIC		IIB	
L_o [mH]	5.0	0.85	10	0.85
C_o [nF]	1400	1900	6600	11000

Ex approval acc. to conformity certificate	TÜV 07 ATEX 554027 X
Approval	SIL2 acc. to EXIDA FMEDA

Indication

Operational readiness	green
Switching state	yellow
Error indication	red

Environmental Conditions

Ambient temperature	-25…+70 °C
Storage temperature	-40…+80 °C
Test voltage	2.5 kV
MTTF	295 years acc. to SN 29500 (Ed. 99) 40 °C

Mechanical data

Tightening torque	3.5 Nm
Electrical connection	M12 flange connection
Housing material	Polycarbonate/ABS
Mounting instruction	for panel
Protection class	IP67
Dimensions	32 x 100 x 25 mm

Approval | Certification	ATEX, IECEx, TR CU

Isolating switching amplifier, 2-channel

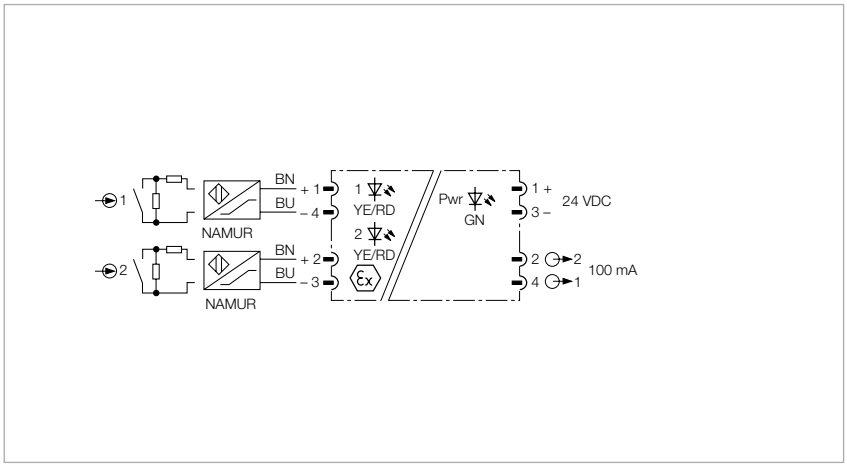

Features

- ATEX, IECEx, TR CU
- Installation in zone 2/22
- Isolating switching amplifier with M12 x 1 connectors, 2-channel
- Line monitored for wire-break/short-circuit (ON/OFF switchable)
- PNP transistor output, NC
- Complete galvanic isolation
- Protection class IP67

The 2-channel isolating switching amplifier IMC-DI-22EX-PNC/24VDC is equipped with intrinsically safe input circuits.

Sensors according to EN 60947-5-6 (NAMUR), variable resistors or potential free contactors can be connected to the device.

The output circuits feature two NO transistors. A green LED indicates operational readiness.

The device must be protected against mechanical load on connector and housing when mounted in zone 2 or 22. For this, use the TURCK cover plate IMC-SG (ident no. 7560016).

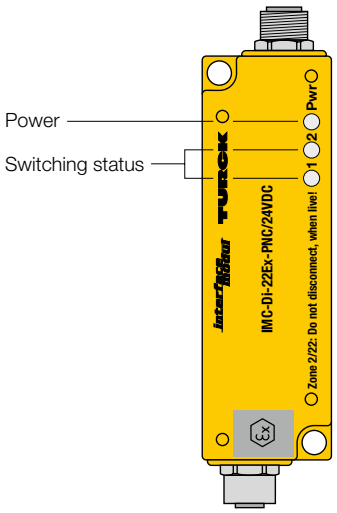

Pin assignment male M12

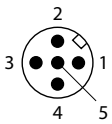

Pin assignment female M12 (intrinsically safe end)

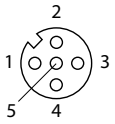

Technical data

Type	IMC-DI-22EX-PNC/24VDC
Ident no.	7560010

Power supply

Nominal voltage	24 VDC
Operating voltage range	20…30 VDC

Inputs

No-load voltage	8.2 VDC
Short-circuit current	8.2 mA
Input resistance	1 kΩ
Cable resistance	≤ 50 Ω
Switch-on threshold:	1.55 mA
Switch-off threshold:	1.75 mA

Outputs

Output circuits (digital)	2 x transistors (pnp, short-circuit proof)
Switching voltage	≤ 30 VDC
Switching current per output	≤ 50 mA
Switching frequency	≤ 3000 Hz

Approvals and declarations

Ex approval acc. to conformity certificate	TÜV 07 ATEX 553447
Device designation	Ex II (1) GD [Ex ia] IIC/IIB
Max. values:	M12 female connection: 1+4 / 2+3
Max. output voltage U_o	≤ 9.6 V
Max. output current I_o	≤ 10 mA
Max. output power P_o	≤ 24 mW
Rated voltage	250 V
Characteristic	linear
Internal inductance/capacitance L_i/C_i	L_i = 0.15 mH, C_i = negligibly small

External inductance/capacitance L_o/C_o

Ex ia	IIC		IIB	
L_o [mH]	0.85	10	1.85	20
C_o [nF]	1100	750	5300	3400

Max. output voltage U_o	≤ 9.6 V
Max. output current I_o	≤ 10 mA
Max. output power P_o	≤ 24 mW
Characteristic	linear
Internal inductance/capacitance L_i/C_i	L_i = 0.15 mH, C_i = negligibly small

External inductance/capacitance L_o/C_o

Ex nL	IIC		IIB	
L_o [mH]	5.0	0.85	10	0.85
C_o [nF]	1400	1900	6600	11000

Ex approval acc. to conformity certificate	TÜV 07 ATEX 554027 X
Application area	II 3 GD
Protection type	Ex nA [nL] IIC/IIB T4 or rather Ex tD A22 IP67 T96 °C
Max. values:	M12 female connection: 1+4 / 2+3
Max.output voltage U_o	≤ 9.6 V
Max. output current I_o	≤ 10 mA
Max. output power P_o	≤ 24 mW
Characteristic	linear
Internal inductance/capacitance L_i/C_i	L_i = 0.15 mH, C_i = negligibly small

External inductance/capacitance L_o/C_o

Ex nL	IIC		IIB	
L_o [mH]	5.0	0.85	10	0.85
C_o [nF]	1400	1900	6600	11000

Ex approval acc. to conformity certificate	TÜV 07 ATEX 554027 X
Approval	SIL2 acc. to EXIDA FMEDA

Indication

Operational readiness	green
Switching state	yellow
Error indication	red

Environmental Conditions

Ambient temperature	-25…+70 °C
Storage temperature	-40…+80 °C
Test voltage	2.5 kV
MTTF	295 years acc. to SN 29500 (Ed. 99) 40 °C

Mechanical data

Tightening torque	3.5 Nm
Electrical connection	M12 flange connection
Housing material	Polycarbonate/ABS
Mounting instruction	for panel
Protection class	IP67
Dimensions	32 x 100 x 25 mm

Approval | Certification	ATEX, IECEx, TR CU

Solonoid driver, 1-channel

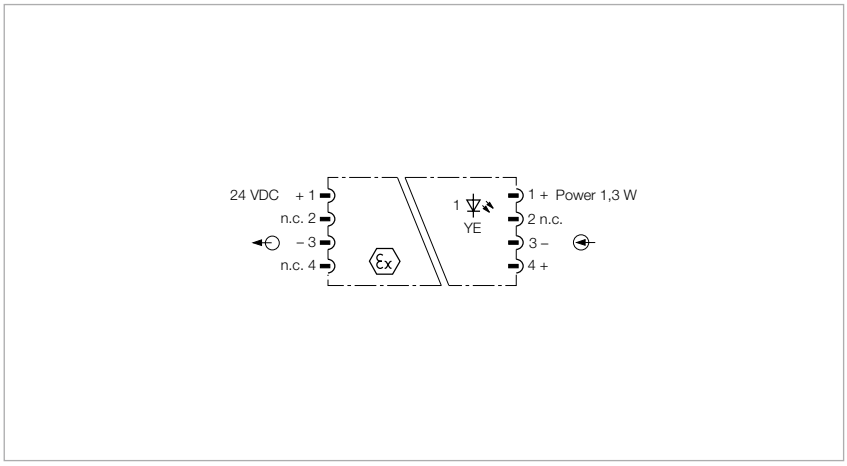

Features

- ATEX, IECEx, TR CU
- Installation in zone 2/22
- Valve control module with M12 x 1 connectors, 1-channel
- Complete galvanic isolation
- Protection class IP67

The 1-channel solonoid driver IMC-DO-11Ex/L features an intrinsically safe output circuit. The device can be mounted in zone 2.

The device must be protected against mechanical load on connector and housing when mounted in zone 2 or 22. For this, use the TURCK cover plate IMC-SG (ident no. 7560016).

Typical applications are the control of Ex i pilot valves and pilot lights as well as the supply of transmitters.

The device is loop-powered. External power supply is not required.

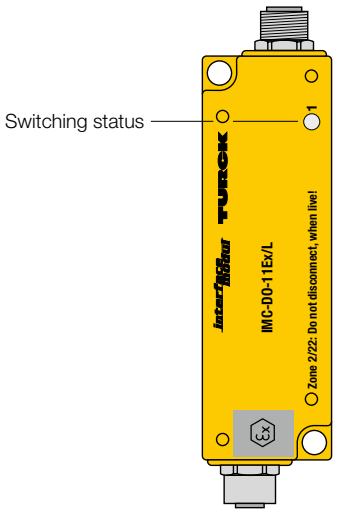

Pin assignment male M12

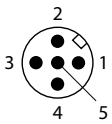

Pin assignment female M12 (intrinsically safe end)

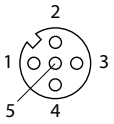

Technical data

Type	IMC-DO-11EX/L
Ident no.	7560008

Power supply

Nominal voltage	24 VDC loop-powered
Power consumption	≤ 1.3 W

Inputs

0-signal	0…5 VDC
1-signal	20…30 VDC
Voltage input	max. 30 VDC
Current input	45 mA
Input delay	≤ 1 ms

Outputs

Output circuits	intrinsically safe acc. to EN 60079
Output current	40 mA
Output voltage	24 V
Output curve	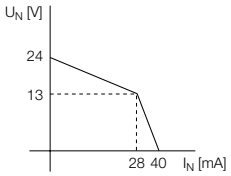

Response characteristic

Limit frequency	≤ 500 Hz
Measuring accuracy	≤ 0.1 % of full scale

Approvals and declarations

Ex approval acc. to conformity certificate	TÜV 07 ATEX 553265
Device designation	Ex II (1) GD [Ex ia] IIC/IIB
Max. values:	M12 female connection: 1+3
Max. output voltage U_o	≤ 27 V
Max. output current I_o	≤ 95 mA
Max. output power P_o	≤ 674 mW
Rated voltage	250 V
Characteristic	Trapezoidal
Internal inductance/capacitance L_i/C_i	negligibly small

External inductance/capacitance L_o/C_o

Ex ia	IIC		IIB	
L_o [mH]	0.75	0.5	2	0.5
C_o [nF]	60	70	310	450

Characteristic	Trapezoidal
Internal inductance/capacitance L_i/C_i	negligibly small

External inductance/capacitance L_o/C_o

Ex nL	IIC		IIB	
L_o [mH]	4.0	0.5	20	5
C_o [nF]	74	130	490	630

Ex approval acc. to conformity certificate	TÜV 07 ATEX 553647 X
Application area	II 3G, II 3D
Protection type	Ex nA [nL] IIC/IIB T4 or rather Ex tD A22 IP67 T86 °C
Max. values:	M12 female connection: 1+3
Max.output voltage U_o	≤ 27 V
Max. output current I_o	≤ 95 mA
Max. output power P_o	≤ 674 mW
Characteristic	trapezoidal
Internal inductance/capacitance L_i/C_i	negligibly small

External inductance/capacitance L_o/C_o

Ex nL	IIC		IIB	
L_o [mH]	4.0	0.5	20	5
C_o [nF]	74	130	490	630

max.Output voltage U_o	≤ 27 V
max. Output current I_o	≤ 95 mA
max. Output power P_o	≤ 674 mW
Approval	SIL3 acc. to EXIDA FMEDA

Indication

Switching state	yellow

Environmental Conditions

Ambient temperature	-25…+70 °C
Storage temperature	-40…+80 °C
Test voltage	2.5 kV
MTTF	326 years acc. to SN 29500 (Ed. 99) 40 °C

Mechanical data

Tightening torque	3.5 Nm
Electrical connection	M12 flange connection
Housing material	Polycarbonate/ABS
Mounting instruction	for panel
Protection class	IP67
Dimensions	32 x 100 x 25 mm

Approval | Certification	ATEX, IECEx, TR CU

Input analog signal isolator, 1-channel

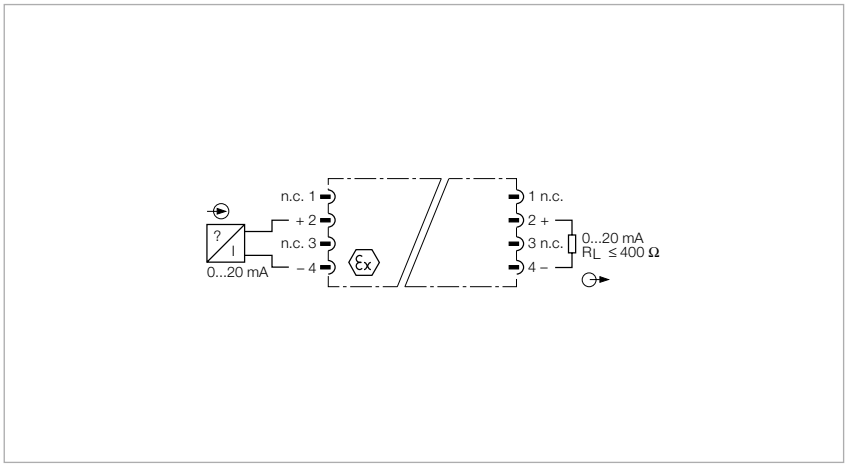

Features

- ATEX, IECEx, TR CU
- Installation in zone 2/22
- Analog signal isolator with M12 x 1 connectors, 1-channel
- Input circuit: 0/4…20 mA
- Output circuit: 0/4…20 mA
- Complete galvanic isolation
- Protection class IP67

The 1-channel analog signal isolator IMC-AI-11EX-I/L features an intrinsically safe input circuit. The device can be mounted in zone 2.

The device must be protected against mechanical load on connector and housing when mounted in zone 2 or 22. For this, use the TURCK cover plate IMC-SG (Ident no. 7560016).

The standard current signal is transmitted from the Ex-area to the safe area without attenuation (1:1). The output circuit is equipped with a short-circuit protected power source.

Intrinsically save analog data transmitters can be connected to the device in the Ex area.

The device is loop-powered.



Pin assignment male M12

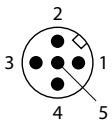

Pin assignment female M12 (intrinsically safe end)

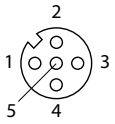

Technical data

Type	IMC-AI-11EX-I/L
Ident no.	7560004

Power supply	
Nominal voltage	24 VDC loop-powered
Power consumption	≤ 3 W

Inputs	
Voltage input	max. 30 VDC
Current input	0…20 mA

Outputs	
Load resistance, current output	≤ 0.4 kΩ
Output voltage	max. 13 VDC
Output current	0…20 mA

Response characteristic	
Measuring accuracy	≤ 0.1 % of full scale
Reference temperature	23 °C
Temperature drift	≤ 0.005 % / K
Rise time (10-90%)	≤ 10 ms
Dropout time (90…10%)	≤ 10 ms

Approvals and declarations	
Ex approval acc. to conformity certificate	TÜV 07 ATEX 553222
Device designation	Ⓔx II (1) GD [Ex ia] IIC/IIB
Rated voltage	250 V
Max. values:	M12 female connection: 2+4
Max. input voltage U_i	≤ 27 V
Max. input current I_i	≤ 150 mA
Max. input power P_i	≤ 1000 mW
Internal inductance/capacitance L_i/C_i	negligibly small
Ex approval acc. to conformity certificate	TÜV 07 ATEX 553945 X
Application area	II 3 GD
Protection type	Ex nA [nL] IICIIB T4 or rather Ex tDA 22 IB67 T80°C
Max. values:	M12 female connection: 2+4
Max. input voltage U_i	≤ 27 V
Max. input current I_i	≤ 150 mA
Max. input power P_i	≤ 1000 mW
Approval	SIL2 acc. to EXIDA FMEDA

Environmental Conditions	
Ambient temperature	-25…+70 °C
Storage temperature	-40…+80 °C
Test voltage	2.5 kV
MTTF	565 years acc. to SN 29500 (Ed. 99) 40 °C

Mechanical data	
Tightening torque	3.5 Nm
Electrical connection	M12 flange connection
Housing material	Polycarbonate/ABS
Mounting instruction	for panel
Protection class	IP67
Dimensions	32 x 100 x 25 mm

Approval | Certification	ATEX, IECEx, TR CU

Isolating transducer, 1-channel

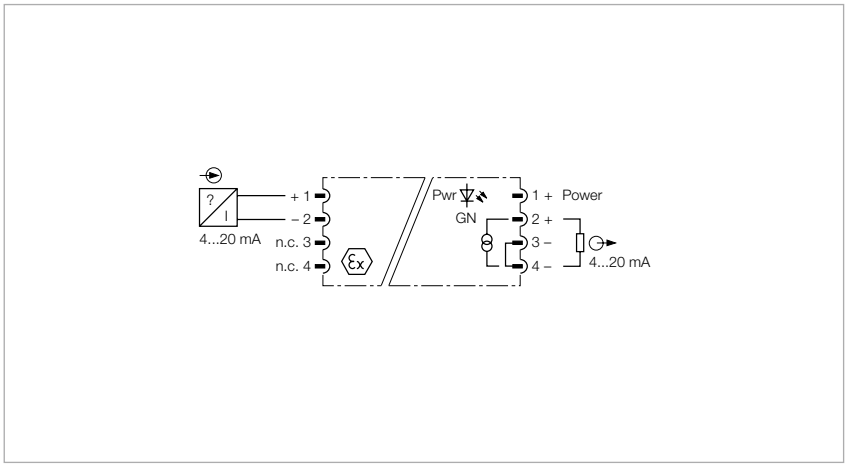

Features

- ATEX, IECEx, TR CU
- Installation in zone 2/22
- Isolating transducer with M12 x 1 connectors, 1-channel
- Output circuit: 0/4…20 mA
- Complete galvanic isolation
- Protection class IP67

The 1-channel isolating transducer IMC-AIA-11Ex-i/24VDC features an intrinsically safe input circuit. The device can be mounted in zone 2.

The device must be protected against mechanical load on connector and housing when mounted in zone 2 or 22. For this, use the TURCK cover plate IMC-SG (Ident no. 7560016).

The standard current signal is transmitted from the Ex-area to the safe area without attenuation (1:1). The output circuit is equipped with a short-circuit protected power source.

Intrinsically save analog data transmitters can be connected to the device in the Ex area.

The device is designed for a 24 VDC supply. A green LED indicates operational readiness.

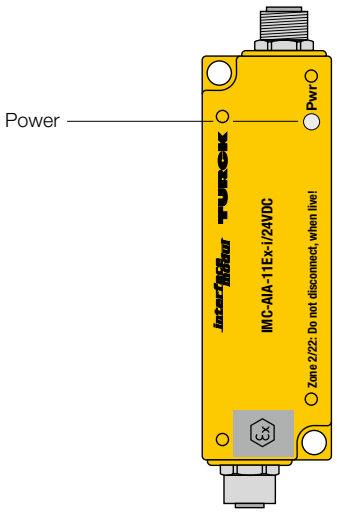

Pin assignment male M12

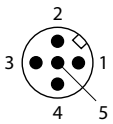

Pin assignment female M12 (intrinsically safe end)

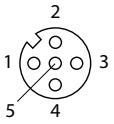

Technical data

Type	IMC-AIA-11EX-I/24VDC
Ident no.	7560009

Power supply

Nominal voltage	24 VDC
Operating voltage range	20…30 VDC
Power consumption	≤ 1.5 W

Inputs

Supply voltage	≤ 14 V / 20 mA
Current	25 mA
Current input	4…20 mA

Outputs

Load resistance, current output	≤ 0.5 kΩ
Output current	0…20 mA

Response characteristic

Measuring accuracy	≤ 0.1 % of full scale
Reference temperature	23 °C
Temperature drift	≤ 0.005 % / K
Rise time (10-90%)	≤ 10 ms
Dropout time (90…10%)	≤ 10 ms

Approvals and declarations

Ex approval acc. to conformity certificate	TÜV 07 ATEX 553644
Device designation	Ex II (1) GD [Ex ia] IIB
Max. values:	M12 female connection: 1+2
Max. output voltage U_o	≤ 21.8 V
Max. output current I_o	≤ 64.5 mA
Max. output power P_o	≤ 1130 mW
Rated voltage	250 V
Characteristic	Trapezoidal
Internal inductance/capacitance L_i/C_i	L_i = negligibly small; C_i = 11 nF

External inductance/capacitance L_o/C_o

Ex ia	IIB	
L_o[mH]	5.8	0.2
C_o[nF]	469	799

Max. output voltage U_o	≤ 21.8 V
Max. output current I_o	≤ 64.5 mA
Max. output power P_o	≤ 1130 mW
Characteristic	linear
Internal inductance/capacitance L_i/C_i	C_i = 11nF, L_i = negligibly small

External inductance/capacitance L_o/C_o

Ex nL	IIC		IIB	
L_o [mH]	0.85	0.2	22	10
C_o [nF]	129	219	800	1200

Ex approval acc. to conformity certificate	TÜV 07 ATEX 554129 X
Application area	II 3G, II 3D
Protection type	Ex nA [nL] IIB/IIC T4 or rather Ex tD A22 IP67 T 80 °C Dc
Max. values:	M12 female connection: 1+2
Max.output voltage U_o	≤ 21.8 V
Max. output current I_o	≤ 64.5 mA
Max. output power P_o	≤ 1130 mW
Characteristic	trapezoidal
Internal inductance/capacitance L_i/C_i	L_i = negligibly small; C_i = 11 nF
External inductance/capacitance L_o/C_o	C_i = 11nF, L_i = negligibly small
Approval	SIL2 acc. to EXIDA FMEDA

Indication

Operational readiness	green

Environmental Conditions

Ambient temperature	-25…+70 °C
Storage temperature	-40…+80 °C
Test voltage	2.5 kV
MTTF	294 years acc. to SN 29500 (Ed. 99) 40 °C

Mechanical data

Tightening torque	3.5 Nm
Electrical connection	M12 flange connection
Housing material	Polycarbonate/ABS
Mounting instruction	for panel
Protection class	IP67
Dimensions	32 x 100 x 25 mm

Approval | Certification	ATEX, IECEx, TR CU

Ouput analog signal isolator, 1-channel

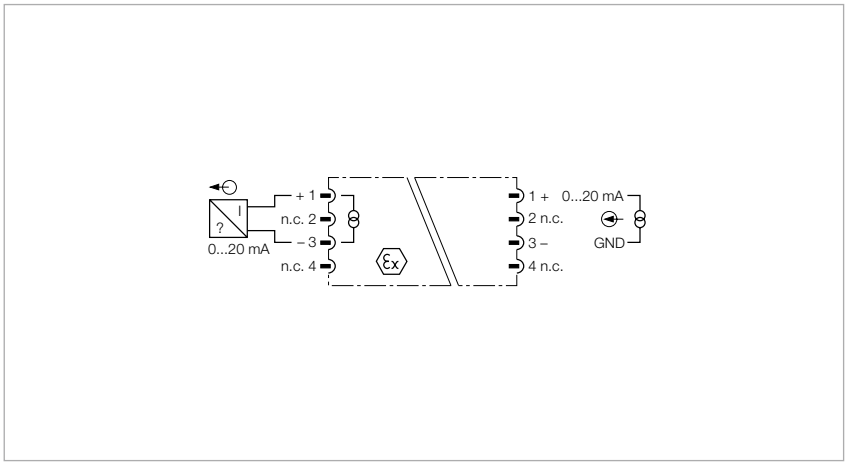

Features

- ATEX, IECEx, TR CU
- Installation in zone 2/22
- Analog signal isolator with M12 x 1 connectors, 1-channel
- Input circuit: 0/4…20 mA
- Output circuit: 0/4…20 mA
- Complete galvanic isolation
- Protection class IP67

The 1-channel analog signal isolator IMC-AO-11Ex-i/L features an intrinsically safe output circuit. The device can be mounted in zone 2.

The device must be protected against mechanical load on connector and housing when mounted in zone 2 or 22. For this, use the TURCK cover plate IMC-SG (Ident no. 7560016).

The normalized current signal is transmitted, galvanically isolated 1:1, from the non-Ex to the Ex-area. The output circuit is equipped with a short-circuit proof power source.

Intrinsically analog actuators like I/P converters (e.g. at control valves) or displays can be applied in the Ex area.

The device is loop-powered.



Pin assignment male M12

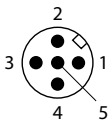

Pin assignment female M12 (intrinsically safe end)

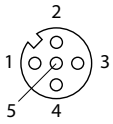

Technical data

Type	IMC-AO-11EX-I/L
Ident no.	7560006

Power supply

Nominal voltage	24 VDC loop-powered
Power consumption	≤ 3.5 W

Inputs

Voltage input	max. 30 VDC
Current input	0…20 mA

Outputs

Load resistance, current output	≤ 0.4 kΩ
Output current	0…20 mA

Response characteristic

Measuring accuracy	≤ 0.1 % of full scale
Reference temperature	23 °C
Temperature drift	≤ 0.005 % / K
Rise time (10-90%)	≤ 10 ms
Dropout time (90…10%)	≤ 10 ms

Approvals and declarations

Ex approval acc. to conformity certificate	TÜV 07 ATEX 553223
Device designation	Ex II (1) GD [Ex ia] IIC/IIB
Max. values:	M12 female connection: 1+3
Max. output voltage U_o	≤ 13.3 V
Max. output current I_o	≤ 97 mA
Max. output power P_o	≤ 322 mW
Rated voltage	250 V
Characteristic	linear
Internal inductance/capacitance L_i/C_i	negligibly small

External inductance/capacitance L_o/C_o

Ex ia	IIC		IIB	
L_o [mH]	2	0.2	2	0.2
C_o [nF]	420	910	2700	5500

Ex approval acc. to conformity certificate	TÜV 07 ATEX 553946 X
Application area	II 3G, II 3D
Protection type	Ex nA [nL] IIC/IIB T4 or rather Ex tD A22 IP67 T80°C
Max. values:	M12 female connection: 1+3
Max.output voltage U_o	≤ 13.3 V
Max. output current I_o	≤ 97 mA
Max. output power P_o	≤ 322 mW
Characteristic	linear
Internal inductance/capacitance L_i/C_i	negligibly small

External inductance/capacitance L_o/C_o

Ex ia	IIC		IIB	
L_o [mH]	5	0.5	10	1.0
C_o [nF]	510	1200	2900	5800

Approval	SIL2 acc. to EXIDA FMEDA

Environmental Conditions

Ambient temperature	-25…+70 °C
Storage temperature	-40…+80 °C
Test voltage	2.5 kV
MTTF	566 years acc. to SN 29500 (Ed. 99) 40 °C

Mechanical data

Tightening torque	3.5 Nm
Electrical connection	M12 flange connection
Housing material	Polycarbonate/ABS
Mounting instruction	for panel
Protection class	IP67
Dimensions	32 x 100 x 25 mm

Approval | Certification	ATEX, IECEx, TR CU

Interface Technology – Accessories

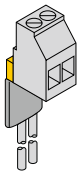	**WM1** **WIDERSTANDSMODUL** 0912101	The resistor module WM1 meets the requirements for line monitoring between a mechanical contact and a TURCK signal processor. The input circuit of the signal processor is designed for sensors acc. to EN 60947-5-6 (NAMUR) and equipped with a wire-break and short-circuit monitoring function.
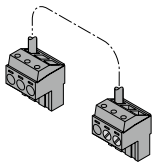	**IM-3-CJT** 6900524	Cold junction compensation module for IM 34 temperature measuring amplifiers, width 18 mm
	**IM-PROG** 6890422	The programming adapter IM-PROG III is used for the parametrization of TURCK IM devices via FDT/DTM. In addition, the in-PROG III provides galvanic isolation.
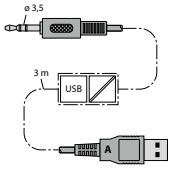	**IM-PROG III** 7525111	The IM-PROG is intended for the parametrization of TURCK devices with PACTware™ via the serial interface of a PC.
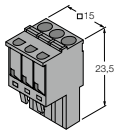	**IM-CC-3X2BU/2BK** 6900475	Cage clamp terminals for IM modules (Ex-devices with 18 mm overall width); includes: 2 pcs. 3-pin blue terminals and 2 pcs. 3-pin black terminals.
	IM-CC-3X2BK/2BK 7541218	Cage clamp terminals for IM modules (Ex-devices with 18 mm overall width); includes: 4 pcs. of 3-pin black terminals
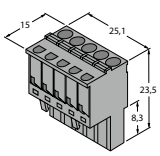	**IM-CC-5X2BU/2BK** 7504031	Cage clamp terminals for IM modules (Ex-devices with 27 mm overall width); includes: 2 pcs. 5-pin blue terminals and 2 pcs. 5-pin black terminals.
	IM-CC-5X2BK/2BK 7541219	Cage clamp terminals for IM modules (Ex-devices with 27 mm overall width); includes: 4 pcs. of 5-pin black terminals
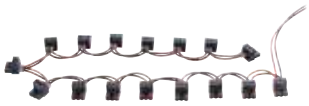	**PB-08/03** 6900370	Power-supply bus for 8 TURCK IM interface modules
	PB-16/03 6900371	Power-supply bus for 16 TURCK IM interface modules
	PB-32/03 6900372	Power-supply bus for 32 TURCK IM interface modules

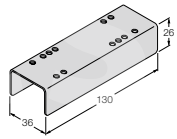	**IMC-SG** 7560016	Metal cover plate for IMC modules (required for application in zones 2/22)
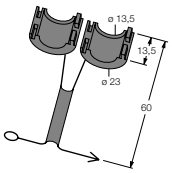	**SC-M12/3GD** 6900390	Captive safety clip for sensors with M12 x 1 connectors and approval acc. to ATEX II 3 G or II 3 D.

Basics of explosion protection

Directives and standards

Development of directives

Up to the end of 1975, only national regulations covering the field of explosion protection existed in the individual European states. On 18 December 1975, the first framework directive for above ground explosion protection came into effect, and became applicable in the member states of the European Union: Directive 76/117/EEC.

By 1990 Directive 76/117/EEC had been modified several times. This directive referred to the characteristics and structure of the equipment at issue and was directly related to standards which applied exclusively to electrical equipment and explosion protection (except mining). As national regulations were still in force, the free transport of goods was still restricted.

At the beginning of 1994, the "Framework Directive 94/9/EC of the European Parliament and Council of 23 March 1994 on the approximation of laws of the Member States concerning equipment and protective systems intended for use in potentially explosive atmospheres" was passed. This directive refers to the "Single European Act" of 1985 in accordance with Article 100a of the First Treaty for Establishing the European Community in the version of February 7, 1992. "ATEX 100a" is the standard abbreviation (ATEX derived from the French term "atmosphère explosible"). Besides Article 100a, there are other articles that have not been transposed in directives. In TURCK catalogs, the term ATEX always refers to the regulations pertaining to ATEX 100a.

The ATEX 100a Directive was integrated into national laws in the individual Member States of the EU, such as in Germany, with the Gerätesicherheitsgesetz (§11 GSGV - Equipment Safety Law) – since 1 December 2011, Produktsicherheitsgesetz (§34 ProdSG – Product Safety Law) – and the Explosionsschutzverordnung ExVO (11. ProdSV - Explosion Protection Ordinance).

The validity of the previous regulations for explosion protection expired on 30.06.2003. ATEX 100a came into force on 1 July 2003, and was superseded by ATEX 95a.

Efforts to harmonize explosion protection regulations worldwide led to the creation of IEC 60079. The aim here is to enable the free movement of goods worldwide. The IECEx scheme specifying approval requirements for equipment was first of all defined for this purpose. This also stipulates the provision of a quality management system which is binding for the manufacturer.

Installation and operation of electrical equipment in hazardous areas – standards and regulations

The following persons are involved in the installation, acceptance and operation of electrical equipment:

- The legislator responsible for industrial supervision, trade organizations, TÜV and experts as supervisory authorities.
- All plant personnel are required to act responsibly and observe precautionary measures such as smoking restrictions and work regulations during the servicing and operation of electrical equipment located in the hazardous area.
- Plant builders who must meet safety requirements according to EN 60079-14, (RL 1999/92/EC), ATEX 137.
- The manufacturers of components subject to construction requirements set forth by IEC/EN 60079 and ATEX 95a (RL 94/9/EC).

EN 60079-14 and DIN VDE 0165 – Installation of electrical equipment in explosion hazardous areas

The DIN VDE 0165 standard includes the safety requirements that must be observed (e.g. classification of explosion hazardous areas into zones, temperature classes, cable routing, requirements for the installation of electrical devices in zones 0, 1 and 2, many specific provisions). Unlike the standards described above, which are primarily for manufacturers, this standard applies to plant builders, operators and test personnel.

The rules for the interconnection are based on the installation requirements of IEC 60079-14 and EN 60079-14. These stipulate that the safety-related maximum values of the input and output parameters of the equipment must be compared in order to assess if the interconnection of several devices with intrinsically safe circuits complies with the requirements of intrinsic safety.

Ordinance on Industrial Safety and Health – (BetrSichV)

The industrial safety ordinance BetrSichV governs the health and safety aspects of the provision of work equipment and its use at work. Furthermore BetrSichV regulates the operation of equipment requiring supervision and the organization of occupational health and safety precautions.

ATEX 137 – Directive for plant operators

The 1999/92/EC Directive of the European Parliament and Council, dated 16 December 1999, describes the minimum health and safety requirements for improving the health and safety of employees exposed to the potential hazards of a potentially explosive atmosphere (previously ATEX 118, now ATEX 137). The directive is aimed at plant operators and employers and stipulates the requirements to be observed. These include the assessment of the risks resulting from a potentially explosive atmosphere, the classification of areas exposed to potentially explosive atmospheres, and the keeping of an explosion protection document.

The explosion protection ordinance – ExVO (11. ProdSV)

The explosion protection ordinance – ExVO (11. ProdSV) regulates the placing on the market of devices, protective systems and components intended for use in potentially explosive atmospheres and is the German transposition of the Directive 94/9/EC. The ordinance describes the essential health and safety requirements and mandatory conformity assessment procedures. The explosion protection ordinance is therefore mainly aimed at manufacturers of devices, maintenance, test and sales personnel.

Like Directive 94/9/EC, the explosion protection ordinance excludes the following equipment from its scope. The following is an extract of exceptions: medical devices, explosive substances, or unstable chemicals, personal protective equipment, seagoing vessels, offshore systems and products for military.

EN 60079-0 – Electrical equipment for explosive atmospheres, general requirements

EN 60079-0 lays down general requirements for the design and testing of electrical equipment required for the hazardous area. The following standards of the EN 60079 series describe the technical implementation of different protection types:

- Flameproof enclosure (EN 60079-1)
- Pressurized enclosure (EN 60079-2)
- Powder filling (EN 60079-5)
- Oil immersion (EN 60079-6)
- Increased safety(EN 60079-7)
- Intrinsic safety (EN 60079-11)
- Protection type n (EN 60079-15)
- Encapsulation(EN 60079-18)
- Intrinsically safe electrical systems (EN 60079-25)
- Optical radiation (EN 60079-28)

EN 60079-11 – Intrinsic safety “i”

Apart from the „intrinsic safety“ ignition protection, all methods of protection attempt to “contain” an explosion on the inside of the housing and to prevent the penetration of an ignitable gaseous mixture.

Protection with “intrinsic safety” is based on a different approach: It limits the electrical energy in a circuit to such an extent, that increased temperatures, sparks or arcs are incapable of generating the energy needed to ignite a potentially explosive atmosphere.

Due to the limitation of electrical energy, these circuits are mainly suited for use in the field of measuring, control and instrumentation and offer some considerable advantages compared to other protection types. An intrinsically safe circuit can therefore be maintained or connected under live conditions without the need for a hot work permit; the easy-to-use systems are also economical thanks to the use of inexpensive components. Last but not least, there are also many suppliers of components with protection type “i”.

Definition of terms

Explosion

By an explosion is meant an exothermic reaction of material (gas, vapor, mist or dust) that takes place at a very high speed of reaction. The risk of an explosion exists wherever there is the probability of an explosive atmosphere. This is possible wherever dust, flammable gases or liquids are manufactured, processed, transported or stored. Such hazardous atmospheres can be present for instance in chemical industries, gas stations, refineries, power plants, paint shops, vehicles, sewage plants, grain mills, airports, grain silos and filling plants.

Explosion hazards

Explosion hazards only exist in locations

- in which ignitable concentrations of flammable substances can exist under normal operating conditions or in the event of faults, and when these conditions provide the probability that a dangerous substance to air mixture is enough to form an explosive mixture;
- where the explosive or ignitable mixtures can come in contact with a source of ignition and continue to burn after ignition.

Explosive mixture (generic term)

An explosive mixture is a mixture of gases or vapors, mists or dusts, capable of propagating a reaction after ignition.

Potentially explosive atmosphere

A potentially explosive atmosphere contains gases, vapors, mists or dusts mixed with air, as well as the usual filler materials that can explode spontaneously under atmospheric conditions (see also ‘Explosive mixture’). This can occur wherever dust, flammable gases or liquids are manufactured, processed, transported or stored.

Potentially explosive atmosphere (hazardous)

A hazardous explosive atmosphere is a mixture containing concentrations of flammable gases or vapors that, when ignited, can cause damage to persons directly or indirectly through an explosion (see also ‘Hazardous explosive atmosphere’).

Hazardous area

A hazardous area is an area in which there is a risk of explosion, i.e. a hazardous explosive atmosphere can occur due to local operating conditions. Such hazardous atmospheres can be present for instance in chemical industries, gas stations, refineries, power plants, paint shops, vehicles, sewage plants, grain mills, airports, grain silos and filling plants.

Ignition triangle

An ignition is only possible if three factors are present at the same time:

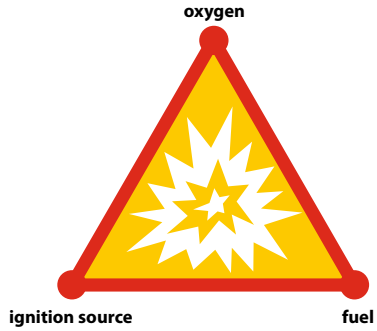

Possible ignition sources:
- hot surfaces
- flames and hot gases
- mechanically generated sparks
- electrical installations
- transient currents
- static electricity
- lightning, ultrasonic energy…

Oxidizers:
- air (21 % oxygen)
- pure oxygen
- oxygen releasing compounds (potassium permanganate etc.)

Combustible substances:
- Gases and dusts arising from flammable liquids and solid materials and present in the correct concentration for an explosion.

Explosive limits

A mixture is only explosive if the concentration is within certain material specific limits. These limits are called the upper and lower explosion limits and are listed in appropriate tables.

Flash-point

The flash-point is the lowest temperature at which a liquid releases sufficient vapors that can be ignited when close to an energy source and extinguished when the energy source is removed.

Primary and secondary explosion protection

Primary and secondary explosion protection measures are used to prevent explosions.

Primary explosion protection

Primary explosion protection consists of measures with which the formation of a hazardous atmosphere can be prevented:
- Avoiding the use of flammable liquids
- Increasing the flash point
- Limiting the concentration
- Natural and technical ventilation
- Monitoring the concentration…

(see also 'Secondary explosion protection')

Secondary explosion protection

Secondary explosion protection consists of measures with which the ignition of a hazardous atmosphere is prevented. For this purpose the electrical equipment is designed so that
- the equipment does not form an effective ignition source and the combining of ignition source and potentially explosive atmosphere is prevented.
- the penetration of ignition into the surrounding explosive atmosphere is prevented.

(see also 'Primary explosion protection')

Electrical equipment featuring ignition protection class „Intrinsic Safety" (IEC/EN 60079-11)

Intrinsically safe and associated electrical equipment

By "intrinsic safety" is meant the reduction of energy in an intrinsically safe circuit so that a thermal effect or spark is incapable of igniting a potentially explosive atmosphere under specified test conditions.

TURCK devices for use in explosion hazardous locations comply with protection type "intrinsic safety". The devices are categorized as intrinsically safe equipment and associated equipment. This distinction is clearly indicated by the marking of the devices (see section „Marking of equipment"). Intrinsically safe electrical equipment consists of devices that are provided exclusively with intrinsically safe circuits. They can be installed directly in the explosion hazardous area provided that the necessary requirements are observed (example: an approved NAMUR sensor in accordance with EN 60947-5-6 or transmitter).

Associated equipment is equipment that incorporates non-intrinsically safe circuits as well as intrinsically safe circuits. Intrinsically safe equipment may be connected to associated equipment, provided that all essential conditions for this kind of interconnected assembly are fulfilled. For example, an isolating switching amplifier is classed as associated equipment and the connected NAMUR sensor as intrinsically safe equipment.

Associated equipment must be installed outside of the Ex area or must be protected additionally by means of another protection type, e.g. flameproof enclosure or pressurized enclosure. A number of TURCK devices are approved for zone 2, enabling the installation of a device in the Ex area. All TURCK devices with intrinsically safe circuits (such as the interface module types) are classified as associated equipment.

Simple electrical equipment

Simple components and simple equipment that do not generate or store more than 1.5 V, 0.1 A and 25 mW do not require a test certificate and are classified as "simple electrical equipment" (e.g. thermocouples). This equipment is defined in the standard EN 60079-14.

Categories

Intrinsically safe and associated electrical equipment are subdivided into three categories according to EN 60079-11. The subdivision is based on the fault probability in the intrinsically safe circuit in conjunction with the possibility of ignition.

Category ia

Category "ia" indicates that the electrical equipment should not be able to ignite a dangerous mixture during normal operation, in the event of a single fault, and in the event of any combination of two faults. Intrinsic safety must be maintained when two independent faults occur at the same time. Components of any equipment of category "ia" that are susceptible to faults must therefore be available in triplicate.

Category ib

Category "ib" states that no ignition must occur in normal operation in the event of a fault. The intrinsic safety must be ensured in the event of a fault. A fault could be the failure of a safety-relevant component. With category ib equipment, safety-related components must therefore be provided in duplicate.

Category ic

Category "ic" denotes that no ignition must occur in normal operation. From 2011 this protection type replaces protection "nL" for use in zone 2. The benefits of intrinsically safe circuits are thus also available in this zone.

Ignition protection class n (EN 60079-15)

Devices with ignition protection class "n" must only be installed in zone 2 or 22. The devices must not provide any ignition sources in normal operation; no maintenance must be carried out during the operation. This must be ensured by means of suitable marking and mechanical locking.

Groups and temperature classes

Electrical equipment for use in explosion hazardous areas is classified into groups and classes based on the likelihood of an explosion hazard. This is of special importance in terms of safety and financial considerations because it determines the requirements that must be met by the electrical equipment. The division into groups is based on the location where the equipment is going to be used:

- Group I classified equipment may be used in mines susceptible to firedamp and must conform to EN 60079 and additional mining standards (e.g. EN 50303).
- Group II classified equipment may not be used in mining applications susceptible to firedamp but in all other explosion hazardous areas.

Group II classified equipment is used in all explosion hazardous areas except mining applications susceptible to firedamp. However, group II devices must be further classified depending on the application area in which they are used and the different flammable substances and ignition energy involved. A further subdivision of group II is therefore necessary and also useful for financial reasons.

The subdivision of group II equipment is based on the different ignition energy of the flammable materials. The different groups are classified by capital letters in ascending alphabetical order according to the hazard risk of the associated materials. Materials belonging to group C require less ignition energy than Group A materials. (see Tab. 1)

	T1	T2	T3	T4	T5	T6
I	methane					
II A	acetone, ethane, ethyl acetate, ammonia, benzene, acetic acid, carbon monoxide, methanol, propane, toluene	ethyl alcohol, i-amyl acetate, n-butane, n-butyl alcohol,	benzines, diesel fuel, aviation fuels, fuel oils, n-hexane	acetaldehyde, ethyl aether		
II B	town gas (coal gas)	ethylene*)				
II C	hydrogen	ethylene*)				carbon disulfide*)

*) no authorized regulations available

Tab. 1: Division of flammable materials – groups and temperature classes

Temperature class

The temperature class is the maximum permissible surface temperature of a device. The explosion protected apparatus can also be approved for several temperature classes – depending on technical and financial considerations.

Depending on the protection type the lowest possible temperature class is thus usually achieved with relatively extensive technical effort and accordingly high expense. The effort required for "intrinsic safety" is relatively low in comparison. Only intrinsically safe equipment that is installed directly in the explosion hazardous area requires a temperature class. The specification of a temperature class for associated equipment is not required.

Ignition temperature

The ignition temperature (defined as the temperature at which a mixture is susceptible to ignition in the course of a defined test procedure) is directly related to the temperature class. The temperature class indicates the maximum surface temperature of the electrical equipment and must be lower than the ignition temperature of the flammable material in order to prevent an ignition. (see Tab. 2)

IEC/EN NEC 505-10 temperature class	Maximum surface temperature of the equipment (°C)	Ignition temperatures of the flammable material (°C)
T1	450	>450
T2	300	>300 ≤ 450
	280	>280 ≤ 300
	260	> 260 ≤ 280
	230	> 230 ≤ 260
	215	> 215 ≤ 230
T3	200	> 200 ≤ 300
	180	> 180 ≤ 200
	165	> 165 ≤ 180
	160	> 160 ≤ 165
T4	135	> 135 ≤ 200
	120	> 120 ≤ 135
T5	100	> 100 ≤ 135
T6	85	> 85 ≤ 100

Tab. 2: Temperature classes with maximum permissible surface temperatures and ignition temperatures

Device groups and equipment categories according to ATEX

The ATEX device marking directive specifies an unambiguous marking for the application range and the design safety level of a device. EN 60079-11 also provides detailed information on how the protection measures were implemented and which applications are permitted and uses similar terms, but the information provided by EN 60079-11 and ATEX may be essentially different.

The first criterion of the ATEX Directive is the device group. Like the groups described above, the different groups are defined and described according to their place of use:

- Device group I: for mining underground with a potential hazard due to firedamp and/or combustible dusts
- Device group II: for all other locations in which a potentially explosive atmosphere exists

The second feature is the equipment category and describes the achieved safety level of a device:

- Equipment category 1: Very high level of safety; there are two independent protection measures; the device is also protected from ignition in the event of rare device faults
- Equipment category 2: high level of safety; there is a protection measure to ensure that the device is protected from ignition in the event faults that are frequent or are normally expected
- Equipment category 3: Normal safety; the device is protected from ignition in normal operation.

Devices classified as Group I (firedamp) use the prefix M, e.g. M1, in addition to the category classification.

The third feature is the Substance group which characterizes the application of devices in particular atmospheres:

- Substance group G: Explosion protection in potentially explosive atmospheres due to gases, vapor or mists (G: Gas)
- Substance group D: Explosion protection in potentially explosive atmospheres due to dusts (D: Dust)

The device marking also determines whether the device is associated equipment or intrinsically safe equipment. If it is associated equipment, the equipment category is placed in round brackets, e.g. II (1) G.

Equipment protection level (EPL)

Devices are classified according to their potential hazard. According to IEC 60079-0 the following equipment protection levels are defined for gas and dust explosion protection:

Gas explosion protection

EPL Ga:
- Device with very high protection level
- The device does not constitute a potential source of ignition when used for its intended purpose and when subject to faults which cannot necessarily be expected on a regular basis

EPL Gb:
- Device with high protection level
- The device does not constitute a potential source of ignition when used for its intended purpose and when subject to faults which cannot necessarily be expected on a regular basis

EPL Gc:
- Device with increased protection level
- The device does not constitute a potential source of ignition when used for its intended purpose
- The device is provided with additional protection, to prevent an ignition source with regularly expected faults.

Dust explosion protection

EPL Da
- Device with very high protection level
- The device does not constitute a potential source of ignition when used for its intended purpose and when subject to faults which cannot necessarily be expected on a regular basis

EPL Db:
- Device with high protection level
- The device does not constitute a potential source of ignition when used for its intended purpose and when subject to faults which cannot necessarily be expected on a regular basis

EPL Dc:
- Device with increased protection level
- The device does not constitute a potential source of ignition when used for its intended purpose
- The device is provided with additional protection, to prevent an ignition source with regularly expected faults.

EPL and zones

Devices with a higher protection level can be use in applications with lower protection levels. Devices approved for zone 0 can also be used in zone 1 and devices for zone 20 in zone 21.

Equipment protection level	Zone
Ga	0
Gb	1
Gc	2
Da	20
Db	21
Dc	22

Zone classification

In accordance with EN 60079-10 and EN 1127-1, hazardous areas are classified into zones for flammable gases, vapors, fumes and combustible dusts. The classification is based on the likelihood that a hazardous explosive atmosphere can occur. The ATEX Directive has re-defined the zone divisions. The different definitions are listed as follows.

Classification according to
- Zone 0, 1 and 2 for gases, vapors and mists
- Zone 20, 21 and 22 for dusts

Zone classification for gases

Zone 0

Zone 0 consists of areas in which a hazardous explosive atmosphere is present continuously or frequently. The definition has been extended with the term "frequently" in the ATEX Directive. The example shows a gas station with the areas of zone 0.

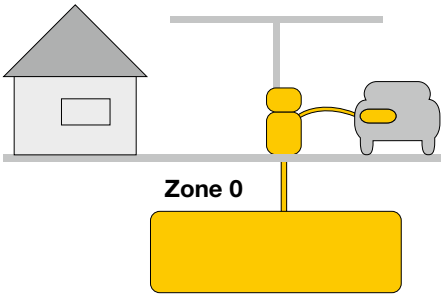

All equipment designed for use in zone 0 must meet category "ia" of equipment category 1 and must not contain any open switch contacts. Galvanic isolation between intrinsically safe and non-intrinsically safe equipment is recommended. If the intrinsically safe circuit has to be grounded for functional reasons, this must be implemented outside of zone 0, however, as close as possible to it. The devices must also be approved for gas group IIA, IIB and IIC.

Zone 1

Zone 1 consists of areas in which a hazardous explosive atmosphere is present occasionally. No change has been made here by the ATEX Directive. The example shows zone 1 is present during refueling in the area of the gas pump.

In industrial plants zone 1 is normally present in the following areas:
- in the close vicinity of zone 0
- in the area surrounding inspection openings
- in the area of filling and draining equipment
- inside equipment.

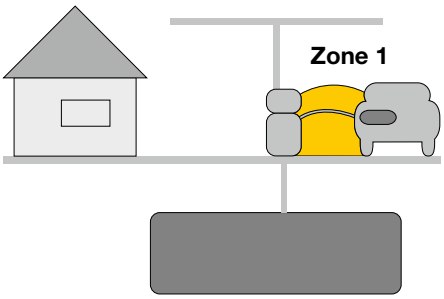

Zone 1 requires equipment category 2 and an approval of devices in group IIA, IIB or IIC, at least in category "ib".

Zone 2

Zone 2 consists of areas in which a hazardous or potentially explosive atmosphere is rarely present and for a short time. According to the ATEX Directive, the definition states that the presence of a potentially explosive atmosphere is not expected, and if so only rarely and for a short period. In industrial applications this includes the following examples:
- Areas near zones 0 and 1
- Areas near flange seals where standard flat seals are used
- Areas near pipelines in closed rooms

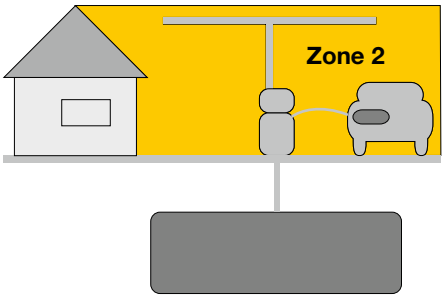

A test certificate from a test authority is not required for use in zone 2 as is compulsory in zone 0 and zone 1. Devices must comply with category 3. The equipment must meet the following criteria (EN 60079-15):

- restricted breathing enclosures (10 K overtemperature only)
- sealed enclosures (various test methods and requirements)
- simple pressurized enclosure (like "p" without purging)
- limited energy (intrinsic safety without safety factor)
- encapsulated switching devices (simple "pressurized enclosure")
- lower requirements for equipment in zone 1, e.g.
- clearance and creepage distances
- housing impact test
- plastic materials
- construction of lampholders and starters

Use of devices in Zone 0 to 2

The intrinsically safe and associated equipment used in Zone 0 to 2 (gases, vapors) must comply at least with the requirements stipulated for the zone at the location where the intrinsically safe equipment is used. If the equipment meets higher requirements, operation is obviously permitted. The national regulations apply to THE interconnected assembly and installation of devices. (For this refer to the information stated under General Notes for the User on the Use of Equipment with Intrinsically Safe Circuits).

Zone classification for combustible dusts and fibers

Zone 20

According to the ATEX Directive, zone 20 is an area in which during normal operation, a potentially explosive atmosphere in the form of a dust cloud can occur continuously or for long periods or frequently. Dust deposits in a known or excessive thickness can be formed. Dust deposits alone do not form a zone 20. Normally these conditions can only be present inside containers, pipes, apparatus etc.

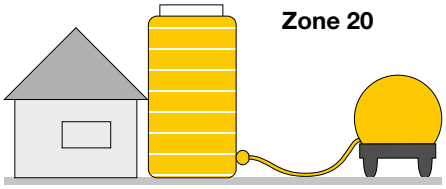

Areas in which dust deposits are present but dust clouds are not present permanently or for long periods or frequently are not assigned to this zone.

Zone 21 and zone 22

Zone 21:
Zone 21 is an area in which a potentially explosive atmosphere in the form of a dust cloud can occur occasionally during normal operation. Dust deposits or layers of combustible dust will usually be present.

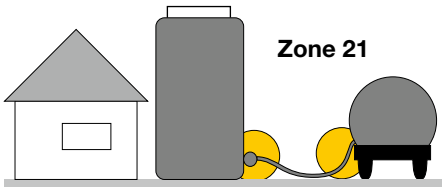

These can include areas in the close vicinity of filling or dust extraction stations, where dust deposits form and potentially explosive concentrations of flammable dust mixed with air may occur during normal operation.

Zone 22:
Zone 22 is an area in which it is unlikely that a potentially explosive atmosphere in the form of a dust cloud occurs during normal operation. However if such an atmosphere does occur, then only for a short period, or as a result of dust accumulation or layers of combustible dust.

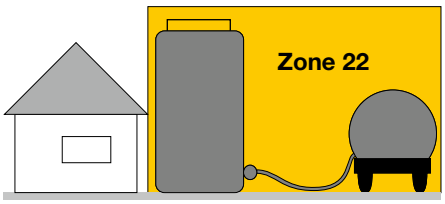

This includes areas in the vicinity of equipment containing dust which can escape due to leakage and where dust deposits can build up (e.g. mills from which dust is released and accumulates).

Use of devices in Zone 20 to 22

National regulations (EN 60079-14/EN 61241-14) must be applied to the selection, installation and maintenance of devices in the area where flammable dust is present. Intrinsically safe devices installed in zone 20 to 22 must therefore have the appropriate approval. Associated equipment, on the other hand, does not require an approval for flammable dusts, and an approval for gases and vapor is sufficient. It is only necessary to ensure that the limit values of intrinsic safety of the EC type examination certificate are met for an interconnected assembly. In this case the intrinsically safe device can then be marked for example as II 1 D and the associated equipment as II (1) G. To prevent misunderstandings, it is standard practice to use the marking II (1) G, II (1) D.

The special requirements for dust protection must be observed for the installation. For example, simple equipment for use in zones 20 to 22 must have an approval, whereas this is not necessary for simple equipment used in zones 0 to 2.

Marking of equipment

Device marking according to CENELEC regulations

Equipment for explosion protected areas must be clearly marked. There are two different types of marking.
According to CENELEC, marking of equipment conforming to EN 60079-0/…-11 must provide the following information:

- Manufacturer's name or trademark
- Type designation
- Serial number
- Test authority
- Ex symbol
- Ignition category code (e.g. "ia")
- If special conditions must be observed: the "X" after the certificate number.

Tab.3: Zone classification – Equipment categories

Zone classification	Likelihood of an explosive atmosphere	Compliance with safety requirements by	Requirements fulfilled by:		
			Equipment group	Related equipment category	Additional equipment category
Zone 0 (gas, …) Zone 20 (dust)	Continuously, for long periods or frequently	2 independent means of protection	II	1G (for gas, ...)	–
			III	1D (for dust)	
Zone 1 Zone 21	Occasionally	1 independent means of protection	II	2 G	1
			III	2 D	
Zone 2 Zone 22	Unlikely or infrequently - for a short period only	Normal operation	II	3 G	1 or 2
			III	3 D	

- Group with the appropriate subdivision (e.g. IIC)
- Temperature class or maximum surface temperature (for group II devices)
- Entry of test authority with date and consecutive number
- Equipment protection level (e.g. "Ga")

An intrinsically safe device is marked as follows:

Ex ia IIC T6 Ga	
Ex	Complies with explosion protection regulations
ia	Protection type (Category)
IIC	Explosion group
T6	Temperature class
Ga	Equipment protection level

Associated equipment for example is marked as follows:

[Ex ia Ga] IIC	
Ex	Complies with explosion protection regulations
Ia	Protection type (Category)
IIC	Explosion group
Ga	Equipment protection level

Marking in accordance with the ATEX Directive

According to the ATEX Directive, the certificate number of the EC type examination certificate must have the following type of marking:

PTB 97 ATEX 2128X	
PTB	Authorized body
97	Test year
ATEX	In accordance with 94/9/EC Directive
2128	Consec. no. of the certificate
X	Special conditions

Within the European Union the devices must meet the relevant requirements. If the manufacturer fulfills these, he is permitted to affix the CE mark with the identification number of the notified body, which carried out the quality assurance system approval.

CE 0102

The test authority TÜV Hannover has the ID number 0044, EXAM (BVS) Bochum 0158 and PTB in Braunschweig 0102.

The marking of the device must also indicate the year of production and the constructional level of safety acc. to ATEX.

For intrinsically safe devices the marking would be:

II 1 G	
II	All areas except mining
1	Suitable for a very high level of safety for zone 0
G	Explosion protected against gas, vapor and mist

With associated equipment, the equipment category is placed in round brackets:

II (1) G	
II	All areas except mining
(1)	Must not be installed in the explosion hazardous area
G	Explosion protected against gas, vapor and mist

Manufacturer obligations

Conformity certificates of the manufacturer and EC type examination certificate of a certification body

A test authority must examine and certify that the devices are suited for use in explosion hazardous areas and comply with the relevant regulations and standards. For this the manufacturer submits a test sample to the test authority. The testy authority then issues the test report which is passed on to a certification body. The certification body decides on the basis of the test report whether an EC type examination certificate is issued. The test and certification bodies in the EC are registered centrally.

The type examination certificate contains all relevant explosion protection data for devices of zone 0 and zone 1. This certificate is kept exclusively with the manufacturer of the device. The manufacturer provides operating instructions for his device containing the relevant explosion protection data. The manufacturer also certifies with his conformity declaration that the defined standards and directives have been observed. These two documents are required by the user for the documentation of his installation.

CE marking procedures

Devices for use in explosion hazardous areas are provided with the CE marking and the identification code of the testing authority. The procedure for issuing the CE marking is clearly defined and depends on the equipment category. The example shown for equipment category 1 illustrates the highest safety level and the applicable annexes of the 94/9/EC Directive are also shown.

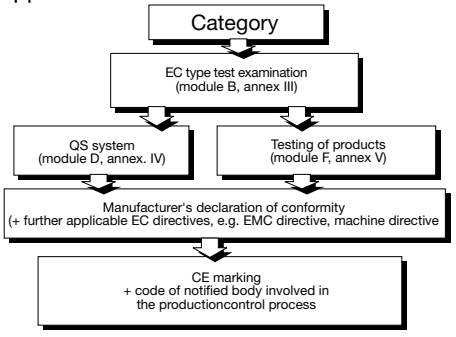

Different annexes apply to the various equipment categories.

QA system approval

The manufacturer of category 1 and 2 intrinsically safe devices must have an approved quality management system. The approval is designed to ensure that manufacturers produce their devices in accordance with the type examination certificate and that the relevant safety regulations are observed. The system approval is carried out by an approved body. This can be achieved in two ways.

Approval can be achieved directly within the scope of certification according to ISO 9000ff. Approval of those fields associated with explosion protection is accomplished in cooperation with an expert from the approval body. If the ISO certificate has already been granted, it is possible to certify those parts relating to explosion protection subsequently within the scope of an additional audit. The following illustration shows both methods.

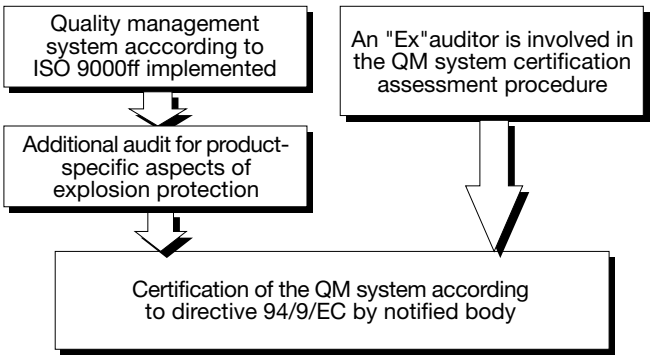

TURCK's manufacturing sites for explosion protected devices are certified according to ISO 9001 and have a QA system approval.

General guidelines on the use of devices with intrinsically safe circuits

The relevant national regulations and standards are the basis for the use of devices with intrinsically safe circuits. These must be strictly observed and followed. The user is obliged to keep up-to-date with the latest revisions. The following guidelines relate to the ATEX (94/9/EC) Directive of the member states of the European Union, especially to the field of explosion protection in areas exposed to hazards by gas.

If the device is classified as an associated apparatus equipped with intrinsically safe and non-intrinsically safe circuits, it may not be installed in explosion hazardous areas. Intrinsically safe devices located in the hazardous area can only be connected to the intrinsically safe circuits. With the TURCK devices, the intrinsically safe connections are provided with a blue marking.

When interconnecting devices within such an assembly, the "Verification of intrinsic safety" must be completed without fail (EN 60079-14: 2004, chap. 12.2.5). This examines whether all data related to explosion protection of the different devices can be operated together. Verification must take into account the internal capacitances and inductances of the cable used. Please refer to the separate section "Verification of intrinsic safety".

Intrinsically safe circuits must never be connected to non-intrinsically safe circuits. A single operation may result in critical protective devices being destroyed without the user noticing anything. A function test does not provide the satisfactory information to determine this. The use of equipment with intrinsically safe circuits connected to non-intrinsically safe circuits is no longer permissible in explosion protection applications.

The installation of intrinsically safe circuits, mounting to external connections, cable characteristics and cable installation must comply with the relevant regulations. Cables and terminals with intrinsically safe circuits must be marked and separated from non-intrinsically safe circuits or provided with appropriate isolation (> 1500 VAC).

The following is an extract of the requirements according to EN 60079-14:

- protection against external electrical or magnetic fields (e.g. power current cables)
- prevent conductor splicing of fine wires using ferrules
- min. cross section (also for single wires of a conductor): 0.1 mm
- protection from damage (mechanical, chemical, thermic…)
- armoring, metal cladding, shielding of cables and lines
- no common use of single-core cables for intrinsically and non-intrinsically safe circuits in one line
- separate fault assessment when using multi-core cables and lines
- when marking cables by color, light-blue must be used

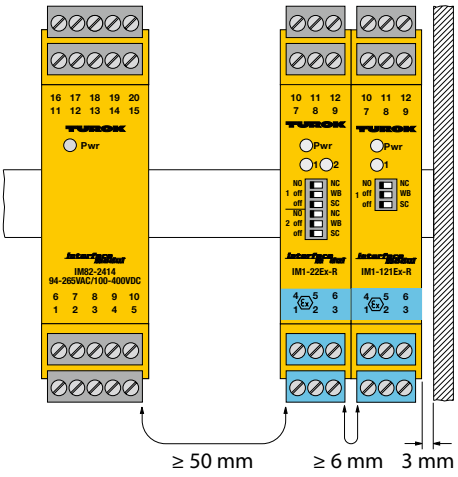

Either a partition must be used between intrinsically safe and non-intrinsically safe connections so that the minimum clearance is 50 mm (thread measure), or each connection must be covered individually and securely with a sleeve so that no part of the connection is exposed.

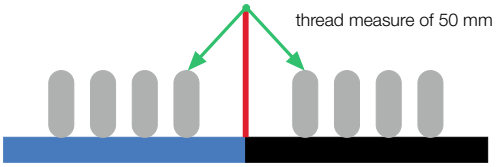

A thread measure is the distance between the circuits around a partition. This is necessary because it is possible to work with live intrinsically safe circuits; when disconnected, these circuits must therefore not come into contact accidentally with any non-intrinsically safe connectors. This distance is however only required for external connections which can be accessed by the user. The minimum distance between two intrinsically safe circuits must be 6 mm and the separation from other (grounded) metal parts must be 3 mm.

Approval becomes invalid if the device is repaired, altered or opened by a person other than the manufacturer or an expert unless the specific instructions for the device explicitly permit such interventions. Only in this way is the required technical information

about the protection measures available, and is it possible to ensure that the device continues to comply with the regulations. Visible changes to the housing, such has brown-black colorations caused by heat, holes or deformations indicate a serious fault. The device must be switched off immediately and examined. If necessary, the connected devices must also be examined.

The inspection of a device with regard to all relevant aspects of explosion protection may only be carried out by an expert or the manufacturer. Operation of the device is only permitted within the specified limits. For example, the supply voltage may never exceed the maximum rating, and the temperature range during operation must be strictly observed.

Intrinsically safe circuits with galvanic isolation - as is the case with TURCK devices - should not be grounded unless absolutely necessary from a functional point of view. Circuits without galvanic isolation, e.g. Zener barriers, always require grounding. The relevant grounding regulations are laid down in EN 60079-14. The grounding of a circuit in zone 0 is not necessary. If grounding is necessary for functional reasons, then it must be carried out in close proximity to zone 0.

Prior to every commissioning or after any change of the device interconnection within the assembly, it must be ensured that all applicable regulations, directives and framework directives are met, that all safety regulations are fulfilled and that the device is functioning properly. Only then is operation permitted.

Mounting and connection of the device should only be carried out by qualified and trained staff familiar with the relevant national and international regulations of explosion protection to ensure correct operation. Only in this way can it be ensured that the system is always in the required safe condition.

The operator of a system is responsible for its proper working order, and must ensure that it is supervised continuously, that necessary maintenance and work is carried out immediately, and that the relevant safety measures are implemented. If necessary, a system must be tested at least every three years.

Verification of intrinsic safety

EN 60079-14 stipulates that the intrinsic safety of interconnected devices must be verified. There are two basic types of circuits:

- First case: Simple intrinsically safe circuit with only one associated apparatus and at least one intrinsically safe apparatus without further supply
- Second case: Several associated apparatus which can supply electrical energy to the intrinsically safe circuit in normal operation and in the event of a fault.

Simple circuit

In the first case of a simple intrinsically safe circuit, only the electrical limit values from the type examination certificates and the rating values have to be examined for the verification of intrinsic safety. The inductance and capacitance values of the cables used must also be taken into account here. The intrinsic safety of a simple current circuit is verified if the limit values examined meet the following requirements:

Associated equipment	Conditions	Intrinsically safe device + cable
U_0	≤	U_I
I_0	≤	I_I
P_0	≤	P_I
L_0	≥	$L_I + L_C$
C_0	≥	$C_I + C_C$

This applies to circuits with:
- A non-linear output characteristic of the associated equipment and (at the same time)
- Exclusive occurrence of distributed reactances.

If massed reactances are present and the associated equipment has linear limitation, a check must be made whether:
- C_0 1 % of C_I
- L_0 1 % of L_I
-

As soon as one of the two conditions is fulfilled, the percentage of C_0 and L_0 must be reduced by half. (so-called 50 % rule).

Example: Verification of intrinsic safety

Associated equipment: Designation	Type	Manufacturer	Test certificate no.	Expl. group	U_0 [V]	I_0 [mA]	P_0 [mW]	L_0 [mH]	C_0 [µF]
Isolating switching amplifier	IM1-22EX-R	TURCK	TÜV D4 ATEX 2553	[Ex ia Ga] IIC	9.6	11.0	26.0	1.0	1.1

Intrinsically safe equipment: No.	Designation	Type	Manufacturer	Test certificate no.	Expl. group	U_i [V]	I_i [mA]	P_i [mW]	L_i [µH]	C_i [nF]
1	Proximity switch	BIM-INT-Y1X	TURCK	KEMA 01 ATEX 1264 X	EEx ia IIC T6	20.0	60.0	80.0	150.0	150.0
2	Proximity switch	BI1-EG05-Y1	TURCK	KEMA 02 ATEX 1090 X	Ex ia IIC T6	20.0	60.0	130.0	150.0	150.0

⇒	Cable inductances and capacitances: (Manufactures spec. or $L_c = 1$ mH/km. $C_c = 110$ nF/km)	Total cable length: 130 m	0.13	14.3
	Total inductances and capacitances: (ΣL_i and ΣC_i)		150.13	164.3
	Intrinsic safety is achieved if all conditions are fulfilled: $U_0 \leq Ui$ $I_0 \leq Ii$ $P_0 \leq Pi$ $L_0 \geq \Sigma L_i$ $C_0 \geq \Sigma C_i$			

The manufacturer's specifications must be observed for the cables. If these specifications are not available, the following values can be assumed (according to EN 60017-14, Part 12.2.2.2.): 200 pF/m and 1 mH/m or 30 µH/Ω.
If the value P_0 of the associated equipment is not stated, a linear characteristic must be present. From this P_0 can be calculated by $P_0 = ¼ \times I_0 \times U_0$.

The connection of proximity switches to isolating switching amplifiers, two-wire transmitters to isolating transducers or solenoid valves to valve control modules can be regarded as examples of simple circuits. The conformance certificate and the EC type examination certificate contain different indices for the limit values. In this description only the indices according to EN 60079-14 are used. The index 0 here stands for maximum limit data that can be output and I for the maximum limit data that can supplied.
Standardized documents should be used for the intrinsic safety verification in order to ensure greater clarity. Besides the date and the name of the issuer, the document should also contain the circuit designation or number.

Interconnection/assembly of several devices

The second case considers the interconnection of several active associated apparatus. The electrical limit values of the EC type examination certificate must not in this case be used as proof of intrinsic safety. This procedure is fundamentally different to the first case. This considers a new assembly based on the interconnection of the individual associated apparatus into a single assembly with new limit values. This kind of interconnected assembly is then always assigned to category "ib", even if all the individual apparatus are assigned to category "ia". The use of such an assembly for zone 0 is therefore not permitted. A detailed description of the interconnection and assembly of several devices is beyond the scope of this introduction. The related calculation methods and an example are contained in annexes A and B of EN 60079-14. The ignition curves of IEC 60079-11 are also required for this. These ignition curves are also contained in EN 50020.

A special procedure must be observed when interconnecting associated equipment that does not have linear characteristics throughout. This is described in detail in EN 60079-25.

Applicability of approvals

Scope of approvals/national approvals

Equipment that conforms to the ATEX Directive can be freely traded, installed and operated in the member states of the European Union.

ATEX approval is recognized in Switzerland although this country is not a member of the EU. An approval by the SEV is no longer required if the customer is provided with the necessary documentation. This includes the operating instructions of the device, the type examination certificate, the CE declaration and the certificate of the manufacturer's Ex audit.

Many states worldwide require their own national approval of the equipment. TURCK devices are therefore often provided with approvals for different states. National approvals are required, for example, in the USA, Canada, China, Japan, Australia or the CIS countries. Other countries accept the issued approvals of other states. For this reason, knowledge of national regulations is essential.

In many countries, approvals are only issued for a limited period. When purchasing a device it should therefore be ensured that the time limit for the approval was renewed. Further operation is accepted in many countries if an approval elapses after the installation.

The ATEX approval and the approvals in the USA and Canada are not time limited.

Approvals available on the internet

Current overview of approvals

The approvals of all TURCK devices are available on the Internet and can be downloaded directly from the TURCK website: www.turck.com

Glossary

Terms and explanations

Active metal part

Active metal parts are conductors or conductive components that carry an electrical voltage during operation.

Actuator

An actuator, such as a control valve for example, is a device that converts electrical control signals into mechanical motion.

Address

The address is on a network, a numerical identification that is needed to identify the participants, e.g. the hardware address of a field bus (MAC address) or the IP address of a host (PC).

Addressing

Addressing describes the assignment and setting of an address, e.g. for a station in a network.

Alarm output

A detected error resulted in the shutdown of the corresponding output. The alarm output remains on as long as the input circuit monitoring does not detect any faults. If a fault occurs in a circuit, the alarm output switches off (see also 'Common alarm output').

Alarm output (interface technology)

Electrical output that is set to LOW in the event of an error.

Analog

Representation of a signal with continuous, interruption-free history.

Analog output

The analog output signal of the device is used for the continuous output of a measured variable. The format of an analog signal is for example 0/4 … 20 mA or 0/2 … 10 V.

Analog signal

An analog signal is an electrical signal that can continuously take on any infinitely variable value between a minimum and maximum value (see also 'Digital signal'). For analog signals, the value x of the physical size (such as a voltage) is also mapped as physical size. Thus there is an analogous correlation between the physical unit and the value representing it.

Application area (Ex devices)

The application areas for Ex devices are:
- The areas in the explosion hazardous zones themselves
- The areas outside of the explosion hazardous zones

ARP

ARP (Address Resolution Protocol) is used to assign hardware addresses (MAC IDs) worldwide to the IP address of the network stations. The assignments are managed in internal tables (AR tables).

ATEX

The abbreviation for "Atmosphère explosible" stands for the EC Framework Directive 94/9/EC, which refers to the "single European Act" under Article 100a of the EU. The corresponding national regulations for explosion protection were adopted from the ATEX 100a.

Attenuating element

Attenuating elements consist of a special material and serve for the damping of sensors.

Backplane

A backplane is a mounting plate which provides slots for taking module cards.

Baud

Baud is a unit for the transmission speed. One baud corresponds to the transfer of one step/signal change per second. If one bit is transferred per step, the baud rate is identical to the transfer rate in bits per second, if a step is transferred in 0.2 s, the baud rate is 5.

Baud rate

See Baud

Bidirectional

Bidirectional means that the data and signals are transmitted at the same time from point to point in both directions.

Burden

The burden defines the maximum value of the resistance on an analog output. This value consists of the load of the connected device and the cable resistance.

Bus

A bus collects and transmits data and control information between different components such as CPU, memory and I/O level following a defined protocol. A bus can be composed of a number of parallel cables for data transfer, addressing, control and power supply.

Bus cycle time

The bus cycle time is the time required by a master to serve all stations of a bus system once, i.e. to write the corresponding outputs and read the inputs.

Bus system

A bus system describes the totality of all units that communicate with one another via a bus. Serial bus systems transfer the information serially via a common line; parallel bus systems consist of several parallel lines on which data, address or control information is transferred in parallel.

Cable compensation

With temperature measurements a so-called cable compensation may be required, depending on the measuring process (e.g. Pt100 in 2-wire circuits). With resistance thermometers, the resistance value of the incoming cable must be taken into account with 2-wire circuits; this resistance value is determined with cable compensation and can thus be compensated. Otherwise unwanted corruptions of the measuring result may occur.

Cable resistance

The cable resistance is the resistance value of a complete cable (feed and return cables).

Capacitive coupling

A capacitive (electrical) coupling occurs between conductors located on different potentials. This can cause interference. Possible causes of a capacitive coupling are signal cables, contactors routed in parallel and static discharges.

Coding element

A coding element is an element consisting of two sections, which is used for the unique assignment of the electronic and base module in the TURCK BL20 and BL67 I/O systems.

Cold junction compensation

A thermocouple consists of two wires of different metals, connected at one end to a measuring point. On the two open ends of the thermocouple (= cold junction) a voltage can be measured which is determined by the different electron density of the wires, as well as by the temperature difference between the measuring point and cold junction. Thus, a thermocouple measures not absolute temperature at the measuring point, but the differential temperature between the measuring point and the cold junction. Since the voltage is usually measured at ambient temperature, the measured voltage value is too low by the amount which corresponds to the voltage of the ambient temperature. Therefore, the so-called "cold junction compensation" is carried out to determine the value for the absolute temperature at the measuring point. To do so, temperature at the cold junction must either be kept constant - as in the past by an ice bath with constant 0 °C ("cold junction") - or the temperature of the cold junction must additionally be measured as a reference point.

Common alarm output

A detected error resulted in the shutdown of the corresponding output. As long as the error monitoring detects no errors, the alarm output is switched on. When an error occurs in a circuit, the alarm output switches off (see also alarm output).

Common potential

Common potential means that the reference potential of control and working circuit (input and output circuit) are electrically connected.

Configure

Is the systematic arrangement of the modules of a station.

Current consumption

The current consumption defines the current that is used for the power supply of the device. For sensors with switching output the power consumption is indicated without load.

DeviceNet™

DeviceNet™ is a standard open bus system based on CAN (Controller Area Network) and is standardized in EN 50325. It is widely used in the USA and Asia.

DHCP

Dynamic Host Configuration Protocol - DHCP is a client-server protocol for the allocation of IP addresses and other parameters. It is used for the dynamic and automatic configuration of terminal devices.

Digital

Representation of a value by a series of characters that are assigned to the value to be represented (e.g. a voltage) according to a

code. Examples of digital representation: binary 0 and 1, decimal by the digits 0 through 9 and alphanumeric digits - and letter combinations.

Digital output

A digital output provides on/off signals depending on the values that are determined during a continuous measuring process. Digital outputs are normally implemented with PNP or NPN transistors or with an electromechanical relay.

Digital signals

For digital signals, the value of the physical quantity x of a voltage for example, is not represented as a physical size, but encoded in characters of any kind, such as in binary digit combinations. There is thus no analogous correlation between the physical unit and the output value. Basis of the digital process is the collection and analysis of abstract strings corresponding to a physical value such as a voltage.

DIN

DIN is the mark for the collective work of the Deutsches Institut für Normung e. V., a central body for normative and standardization work in Germany.

Drop-off time

The drop-off time defines the time required for a signal to change its signal level from 90% to 10 % (see also 'Rise time').

DTM

DTM stands for Device Type Manager and defines the application-independent driver for computer-programmable and communication devices within a defined FDT frame application such as PACT*ware*™. The DTM includes among others:
- User interface for the device
- Device logic and parameterization

EC Declaration of Conformity

With the EC Declaration of Conformity the manufacturer of a device certifies legally binding, that the device complies with the relevant European Directives. The manufacturer must ensure this by appropriate manufacturing and testing.

EC type examination certificate

The EC type examination certificate is issued by a certified testing laboratory and contains the technical data of a device or values at which the device may be operated. The EC type examination certificate also states any "special conditions" for the use of the device as well as the basic safety and health regulations.

Efficiency

The efficiency is generally the ratio between output power (effective power) and input power.

ElexV - Ordinance for electrical installations in hazardous rooms (old) /areas (new)

ElexV is applicable in Germany and is aimed at those responsible for the technological causes of the formation of explosive mixtures. The former ElexV of 1980 related to European regulations on explosion protection of industrial electrical equipment. This "old" version constituted the legal basis for almost the entire field of explosion protection of electrical equipment. By defining explosion hazardous areas and especially by dividing these into specific zones, ElexV gained major importance as a virtual standard for explosion protection measures. Since the introduction of the ATEX Directive in 1996 a lot has changed. Definitions relating to the non-electrical aspects of new electrical equipment are now covered by the new "Explosion Protection Ordinance" (ExVO). The "new" 1996 version of the ElexV refers only to those parts which have not yet been transposed into national regulations.

EMC

By electromagnetic compatibility (EMC) is meant the ability of an electrical device to operate satisfactorily in an electromagnetic environment without adversely affecting or being adversely affected by other electrical equipment.

EN

Abbreviation for "European Norm"

Equipment, electrical

Electrical equipment is an object that is used for the generation, conversion, transfer, distribution or application of electrical energy, such as sensors, cables, machines, control devices.

ESD

Electrostatic Discharge – ESD is the abbreviation for electrostatic discharge, and describes the balancing of electrical charge between two differently charged materials.

EtherCAT®

EtherCAT® is an Ethernet-based standard bus system with a master/slave architecture for fast applications and time-sensitive industrial applications, and is standardized in compliance with IEC 61158, IEC 61784 and ISO 15745-4. It offers the cyclical transmission of I/O data and acyclical transmission of requested data such as parameters, diagnostics and device identification data.

EtherNet/IP™

EtherNet/IP is an open Ethernet standard for industrial networks standardized to IEC 61158. It is mainly used in America and offers the connection to server-based office functions such as email clients or web servers.

External inductance

By external inductance is meant those inductances that have an effect outside of an Ex device, such as in a cable.

ExVO

Explosion Protection Regulation

Fault current

Output current in the event of a wire break or short-circuit in the input circuit, selectable between 0 mA or > 21.5 mA

FDT

FDT stands for Field Device Tool and describes the interface definition between the specific device DTMs used and the frame application (such as PACT*ware*™). The FDT includes:
- A standard user environment for all DTMs

- User management
- Management of the used DTMs
- Network configuration

Field device

In automation, devices that are installed outside of the control cabinet, e.g. a NAMUR sensor, are called field devices.

Field supply

Power supply for the field devices and the signal voltage

FM (Approval)

Factory Mutual - certification and test lab for North American approvals for the Ex and non-Ex area (see also UL)

Force mode

The Force mode of a software makes it possible to "force" specific variables on input and output modules in order to create specific plant states.

Frequency

The frequency f is the number of vibrations per second and can be calculated as the reciprocal of the period (T = 1/f). The SI unit of frequency is the Hertz (1/s). Often, as well other units are used such as 1/min.

Function code

The function codes are used in the Modbus fieldbus to control the type and method of access to the devices. The function codes are incorporated and contained in the Modbus data telegram, including commands for reading and writing input and output data.

Galvanic isolation

Electric circuits are separated by means of a transformer such as an optocoupler.

GND

GND – Abbreviation for "Ground" (see Mass)

HART®

HART® stands for "Highway Addressable Remote Transducer" and consists of digital communication via a common data bus. The data transfer is implemented according to the Bell 202 standard by means Frequency Shift Keying (FSK). The low-frequency analog signal is superimposed with a high frequency oscillation (± 0.5 mA). A digital "1" is represented with a frequency of 1.2 kHz (1200 Hz) and a "0" with the frequency 2.2 kHz (2200 Hz).

Hexadecimal

Number system with the base 16. The sequence begins with 0 to 9 and continues with the letters A, B, C, D, E and F.

Hysteresis

The hysteresis is the difference between the switch-on and the switch-off point.

Hysteresis (limit value monitoring)

With switching outputs: Difference between switch-on and switch-off point. To avoid fluttering of an output, the two switching points can be set to different values. If the switch-off point is higher than the switch-on point, the exceedance of a limit value is monitored. If the switch-on point is higher than the switch-off point, the undercutting of a limit value monitored. The difference between the values is application-specific and should take into account the regular fluctuations in the measured value.

I/O

Abbreviation for "Input/ Output"

I/P converter

An I/P converter converts a current signal on the input side (0/4…20 mA) to a pressure on (e.g. 0.5…4 bar) on the output side.

IECEx

International Electrotechnical Commission System for Certification to Standards Relating to Equipment for Use in Explosive Atmospheres.

Ignition category

The EN 60079 (IEC 60079) standard stipulates general requirements for the design and testing of electrical equipment required for the hazardous area:

- Oil immersion "o" (EN / IEC 60079-6)
- Pressurized enclosure "p" (EN /IEC 60079-2)
- Powder filling "q" (EN / IEC 60079-5)
- Flameproof enclosure "d" (EN / IEC 60079-1)
- Increased safety "e" (EN / IEC 60079-7)
- Intrinsic safety "i" (EN / IEC 60079-11)
- Non-sparking equipment "nA" (EN / IEC 60079-15)
- Sparking equipment "nC" , "nR" (EN / IEC 60079-15)
- Encapsulation "m" (EN / IEC 60079-18)
- Optical radiation "o" (EN / IEC 60079-28)
- Intrinsically safe electrical systems "i-SYST" (EN / IEC 60079-25)

(see also the section 'Basics of explosion protection')

Impedance

The impedance (also: apparent resistance) is the resistance, which a device or a circuit of several devices has for an alternating current of a specific frequency. The size of the impedance is therefore not constant in relation to the different frequency values. This is due to the fact that the impedance also consists of a reactive resistance as well as the pure ohmic resistance (active resistance).

Inductance

The inductance is an electrical property of a current-carrying conductor or other component, to build a magnetic field due to a change in the electrical current, which counteracts the power change.

Inductive coupling

Inductive (magnetic) coupling occurs between two current carrying conductors. The magnetic field caused by the currents induces a voltage that can cause interference. Transformers, motors, power supply cables routed in parallel and HF signal cables are typical sources of interference.

Input circuit monitoring

The input circuit monitoring monitors the connected loop. For analog signals, usually the 4…20 mA signal is used (example: wire breakage I < 3.6 mA; Short circuits I > 21.5 mA). The NAMUR working group makes recommendations on the threshold. NAMUR sensors offer line monitoring for digital signals. Sensors compliant with EN 60947-5-6 (NAMUR) have an impedance of < 400 Ω in a non-operational state and otherwise have a maximum impedance that ensures a minimum current of > 0.05 mA. These limit values can be used for detecting wire breaks and/or short-circuits in the control circuit of switching amplifiers.

Input delay

The input delay specifies the time required by a device (e.g. a valve control module) to provide the output signal after a signal is present at the input.

Input frequency

The input frequency is the maximum rate that must be applied to the input of the unit or that can be measured.

Input lock time

During the input lock-out time pulses at the sensor input of the interface device are suppressed for the set time.

Input resistance

The input resistance is present at the input of a device and loads the voltage source present at the input.

Insulation resistance

By insulation resistance is meant the ohmic resistance between electrical conductors or to ground potential.

Internal inductance

The value of the internal inductance must be taken into account when verifying intrinsic safety. The internal inductance of associated equipment reduces the connectable value. The internal inductance of an intrinsically safe apparatus reduces the usable cable length. The 50% rule should be applied if the intrinsically safe equipment also has an internal capacitance in addition to the internal inductance. This rule is applicable as soon as both reactances are more than 1 % of the connectible reactances. If this is the case, the connectible reactances are reduced by 50 %, i.e. the usable cable length is reduced.

Intrinsic safety

"Intrinsic safety i" is a protection type for the hazardous area that is described by the EN 60079-11 standard. The electrical energy of a device here is limited so that it cannot cause ignition in a potentially explosive atmosphere (see also the section "Basics of explosion protection").

IP protocol

IP protocol (Internet protocol) – a network protocol wide-spread in computer networks and used in the context of the TCP/IP protocol family to communicate data packets. The protocol aims to assemble data packages (formatting and fragmentation) to units, to address the data packages (addressing), and to convey (routing) in a connectionless packet-oriented network.

Limit frequency

The limit or cutoff frequency defines the maximum or minimum value of the frequency that can or should be processed. To ensure interference immunity, an upstream filter is installed in the pulse inputs of rotational speed monitors. Input frequencies that are above the limit frequency of this filter can no longer be processed by the speed monitoring device.

Line monitoring

TURCK interface devices with cable monitoring are used to monitor the input circuit for short-circuits and wire breaks (see also 'Input circuit monitoring').

Linearity deviation

Indicated by sensors with an analog output. Permitted deviation of the output signal from an ideal linear output characteristic as a % of the full scale value of the output signal.

Load resistance

The load resistance is the electrical resistance, by which a power and signal source is loaded.

Loop-powered

Loop-powered devices are fed from the signal and do not require a separate power supply.

LSB

LSB stands for Least Significant Bit; and represents the lowest value of a digital bit string.

MAC ID

The MAC ID (Media Access Control Identification) is the unchangeable, globally unique physical address of a network component. The MAC address is used for communication in Ethernet networks.

Mass

Mass is a common reference potential for conductive components.

Measurement deviation

Is the deviation of a value according to DIN 1319-1:1995 obtained from the measurements of the true value of the measurand.

Measuring accuracy

The closeness of the measured value to the nominal value (see also Measurement deviation).

Measuring range

Indicated by sensors with analog output. It is the size of the range in which the output signal is changed.

Millivolt signals

One thousandth of a volt

Modbus TCP

Modbus TCP is an open Ethernet standard with a client/server architecture for industrial automation that is standardized in IEC 61158. Modbus communication is implemented with function codes that are incorporated in the data telegram. For data transmission in Ethernet-TCP/IP networks, Modbus TCP uses the Transport Control protocol (TCP) for the transfer of the Modbus application protocol.

Module bus (TURCK BL stations and modules)

The internal bus of a BL20 or BL67 station is called the module bus. The module bus is independent of the fieldbus. The BL20 and BL67 modules communicate via the module bus with the gateway.

MSB

MSB stands for „Most significant bit"; in a digital signal of a specific length, the bit that represents the highest value.

Multiprotocol Ethernet

The Ethernet multiprotocol describes a special function of I/O modules that enables the modules to be used in any of the three Ethernet systems PROFINET, Modbus TCP or EtherNet/IP™. The Ethernet multiprotocol modules detect the protocol used automatically by listening to the communication traffic during the startup phase.

NAMUR

International Association of automation technology users of the process industry.

Ni100

Temperature-dependent resistor to DIN 43760, consisting of nickel; less expensive than Pt100 resistors. The temperature coefficient of a nickel resistance thermometer is virtually 2 × greater than that of a platinum resistance thermometer.

No-load voltage

The open circuit voltage is the voltage on the output side if no load is connected.

Nominal voltage

The nominal or rated voltage specified by the manufacturer for the normal operation of a device.

Normally closed operation

Normally closed operation is present when the output (e.g. of an isolating switching amplifier) is active when the contact is open or with an activated NAMUR sensor.

Normally open operation

Normally open operation is present when the output (such as of an isolating switching amplifier) is active when the contact is closed or with a non-activated inductive NAMUR sensor.

On signal (1 signal)

The On signal defines the signal level (e.g. in Volts) required by a device to detect the input pulse (e.g. 5…30 V – see also 'Zero signal').

Operational safety Ordinance (BetrSichV)

The Operational Safety Ordinance (BetrSichV) is the German implementation of the work equipment directive 89/655/EEC [1], later replaced by Directive 2009/104/EC [2], and regulates in Germany the provision of work equipment by the employer, the use of work equipment by workers at work, as well as the monitoring of systems within the meaning of the occupational health and safety.

Output current

The output current is the current that a device can provide at the output circuit.

Output function (see also „Electrical designs")

Typical output functions are: NAMUR: Normalized output signal in accordance with EN 60947-5-6 NO contact (NO): The output is open when the sensor is non-activated and closed when the sensor is activated. Normally closed (NC): The output is closed when the sensor is non-activated and open when the sensor is activated. Complementary/Antivalent (two-way contact): One of the two outputs is closed in the non-activated state and the other output is closed in the activated state. Analog output: The output supplies a normalized output signal (0/4…20 mA or 0/2…10 V).

Output power

The output power is the power that a device can provide at the output circuit, such as a valve control module for the associated valve controlled (see also 'Switching capacity').

Output voltage

The output voltage is the voltage that a device can provide at the output circuit.

Overhead

In data communication, overhead stands for all information additional to the user data that has to be transferred or stored. This includes headers in the data packets, routing data or a check code that a receiver has sent back to the transmitter, in order to confirm correct data transmission.

PACT*ware*™

PACT*ware*™ stands for "Process Automation Configuration Tool" and is an open and manufacturer-independent operator interface for the plant-wide operation of devices, systems and communication components. The connection between the PACT*ware*™ operator interface and the specific device DTM is implemented via an FDT interface. PACT*ware*™ enables the devices of an installation to be configured and operated simply, quickly and efficiently, as well as diagnosed if required.

Parameterization

Parameterization denotes the setting of parameters to specific values, e.g. the device type, format and length data, as well as the number of inputs and outputs in the configuration software of a fieldbus master.

Passive metal part

Passive metal parts are conductive elements that are not energized during (normal) operation, but may become energized in the event of a fault.

Period duration measuring process

With the rotational speed monitors, the time between two successive input pulses is measured directly and compared with the internally defined reference time. This measuring principle also enables acceptable reaction times in applications with relatively large pulse intervals.

Ping

PING - acronym for "Packet INternet Gopher"; A command, with which the accessibility of target stations in networks can be tested. For this, a PING signal is sent to the destination station and checked whether and in what period of time the expected "echo" comes back.

PLC

A programmable logic controller is a device for the digital control and regulation of machinery or equipment. The program sequences are edited cyclicly or acyclicly in the PLC in event-oriented manner.

Potential equalization

Potential equalization consists of all measures taken to equalize differences in electrical potential between the chassis of electrical equipment, the ground and external conductive components.

Potential-free

The reference potentials of control and power circuits (input and output circuit) are said to be potential-free when they are galvanically isolated from each other.

Power consumption

The power consumption defines the value that the device itself converts.

PROFIBUS-DP

PROFIBUS-DP (Process Field Bus for Decentralized Peripherals) is one of the most widely used standard bus systems in automation technology, standardized according to EN 50170. It is used for the fast, serial control of remote field devices by the central controller with cyclic data exchange.

PROFINET

PROFINET is an open Ethernet standard based on PROFIBUS and standardized in IEC 61158 and IEC 61784 for the connection of decentralized devices to a controller. It offers cyclical and acyclical data exchange based on a provider - consumer model.

Protection rating

Protection class according to IEC/EN 60529 and DIN 40050-9, defines the protection of the enclosure against contact with and ingress of foreign matters and humidity. The customary protection classes of TURCK products are:

- IP20: Protection against solid foreign objects with Ø > 50 mm; no protection against water (use only in the control cabinet)
- IP65: Full protection against dust and hose water
- IP67: Full protection against dust and short submersion in water
- IP69K: Full protection against dust and high-pressure/steam-jet cleaning

Protective conductor

A protective conductor is primarily used to offer protection against fatal shock currents and must discharge a fault current for at least a short time. Protective earth/ground conductors are represented by the abbreviation PE/PG (protective earth/ground). The PE/PG for insulated conductors and cables must have a yellow-green marking over the entire length.

Pt100

Pt100 resistors are used for the industrial temperature measurement. In the IEC 751, the basic values can be found for platinum resistors. The measuring range is from -200 °C to +850 °C; common is the range -100 °C to +600 °C for standard resistors. A Pt100 can be connected in 2, 3 or 4-wire technology to a transmitter.

Pulse

Pulses are voltages or currents that exist over a "short" period. For monitoring rotational speed, the signals of a NAMUR sensor are used as input pulses for the rotational speed monitor.

Pulse output

The pulse output (transistor output) provides the input pulse signal (e.g. with a rotational speed monitor) for other processing units.

Pulse time

The pulse time is the period in which a pulse is present.

Rated voltage

The rated voltage is the highest permissible supply voltage of a device (in normal operation).

Reference ground

The reference ground is the potential of the ground in the vicinity of the grounding equipment. Unlike the ground, which always has a potential of zero, the reference ground can have a different potential than zero.

Reference potential

The reference potential is the potential from which the voltages of all connected circuits are considered and/or measured.

Repeater

A repeater is a device that is used in data cables to electrically amplify and refresh the signals to be transferred. This enables data to be transported over large distances.

Response time

A bus system response time is the time interval between sending a read request and the receipt of a reply. The reaction time in relation to an input module is the time between the occurrence of a signal change at the module input and the output of the signal change to the bus system.

Ring memory

A ring memory stores data continuously in a certain period of time, and overrides the data after a given amount of time to reclaim the space for new data. This process is inevitably best illustrated graphically in a ring form, thus the name of this technology.

Ripple

Irregularities in the DC voltage may occur after the VAC mains voltage is rectified to a VDC voltage (due to the original sinusoidal wave of the mains voltage). The remaining wave troughs can be compensated ("smoothed") by means of a capacitor connected in parallel to the load or a coil connected in series to the load. The remaining AC component after smoothing is called the ripple or hum voltage. A 10 % ripple (peak-peak) of the supply voltage is normally tolerated.

Rise time

The rise time defines the time required for a signal to change its signal level from 10% to 90 % (see also 'Drop-off time').

RS485

RS485 (EIA-485) is a serial (bus) interface according to EIA standard for fast, wired data transmission at high data rates.

RS485-IS

Standard RS485 with reduced, adapted intrinsically safe IS signal levels

Segment coupler

The segment coupler is used to adapt the standard RS485 signal to an intrinsically safe RS485-IS signal. The signal is transferred via copper cables. The repeater functionality of the segment coupler ensures that the amplitude and phase of the signal are regenerated; thus preventing any losses in signal strength and quality.

Serial

With serial data transmission, digital data is transmitted sequentially – bit by bit – via a cable. Standardized serial interfaces are available for the serial transfer of digital data.

Shield

A shield is the term given to the electrically conductive covering of cables, housings and cabinets that prevents the formation of electrical or magnetic fields in order to ensure the proper functioning of an electrical system and improve electromagnetic compatibility (see also "Shielding").

Shielding

Shielding describes the entirety of all measures to protect sensitive electronic components or lines against interference through magnetic or electrical fields (see also „Shield").

Short circuit proof

A short circuit proof apparatus resists the thermal and dynamic stresses that can occur at its place of installation due to a short circuit.

Short-circuit

A short circuit is a conductive connection between two or several points in a circuit that are normally energized. The fault current circuit has no effective resistance.

Short-circuit current

The short-circuit current defines the value of the current present in the event of a short-circuit.

Short-circuit detection

Several TURCK interface devices, such as isolating switching amplifiers, are provided with short-circuit monitoring in the input circuit (see also 'Input circuit monitoring' and 'Short-circuit threshold').

Short-circuit threshold

The short-circuit threshold is the value at which a device, such as an isolating switching amplifier, detects a short-circuit in the input circuit.

SIL

SIL stands for Safety Integrity Level. The IEC 62061, IEC 61508 and IEC 61511 standards offer methods of making probabilistic risk assessments of safety circuits. These standards define four safety levels (SIL level) which describe the measures required for the mitigation of risk in installation sections.

Simultaneity factor

The simultaneity factor indicates how many channels can be operated simultaneously with nominal load.

Start-up time delay

Adjustable time for bridging the startup phase, e.g. of a drive in which the alarms are switched off.

Station

A station is a functional unit or assembly, which consists of several components.

Supply voltage

The supply voltage is the voltage that a device requires for trouble-free operation.

Supply voltage range

The supply voltage range is the range between the minimum and maximum value that a device requires to ensure a power supply.

Switch-off delay

Adjustable time by which the switching of the output can be delayed (see also 'Switch-on delay').

Switch-off threshold/Switch-off point

A switch-off point is exceeded or falls below a set value.

Switch-on threshold

The switch-on threshold defines the signal level at which a switch-on is initiated, e.g. by means of a limit value relay.

Switching capacity

The switching capacity is the power that an electrical device can switch safely.

Switching current

The switching current is the current that an electrical device can safely switch.

Switching frequency (interface devices)

The switching frequency indicates the number of status changes per second.

Switching frequency (max.)

The max. switching frequency of a device indicates how many changes of the switching state are possible within a second.

Switching voltage

The switching voltage is the voltage that an electrical device can safely switch.

TCP

TCP (Transmission Control Protocol) is a connection-oriented transport protocol that ensures secure and fault-free data transport based on the Internet protocol and a special fault detection mechanism (e.g. acknowledgment of telegrams, time monitoring of telegrams).

Temperature classes

Equipment for the hazardous area is classified into temperature classes. This specifies the maximum permissible surface temperature of an apparatus. The explosion protected apparatus can also be approved for several temperature classes – depending on technical and financial considerations.

Terminal cross-section

The cross-section of the connection cables of a device

Terminating resistor

A terminating resistor (terminator) is used in a network at the beginning and the end of a bus line in order to prevent disturbing signal reflections.

Test voltage

The test voltage is the voltage used for testing the insulation resistance (see also 'Insulation resistance').

Thermocouples

Thermocouples are used for industrial temperature measuring. The most common types are type B, E, J, K, L, N, R, S and T thermocouples. Depending on type, thermocouples can be used for temperature ranges from -270…1800 °C.

Topology

In networks, the topology denotes the arrangement and connection of network components (stations, nodes). Network components can be connected in different ways Point-to-point connections (such as star, ring and hybrid topology) as well as point to multipoint connections (bus and cell topology).

Transmitter

Transmitters are devices that convert signals into a different, mostly normalized signal (e.g. transducer).

Trigger event

A trigger event is normally the triggering of an event, such as the exceeding of a limit value, on account of which, for example, the write process to a ring memory is stopped.

UDP

UDP (User Datagram Protocol) is a connectionless, unsecured transport protocol for exchanging data between different participants in a network.

UL

Underwriters Laboratories – certification and test lab for North American approvals for the Ex and non-Ex area (see also FM)

Unidirectional

Unidirectional means that the data and signals are transmitted from point to point in one direction only.

Voltage drop

In electrical engineering, the voltage drop is a potential difference which exists between two terminal points of a resistor through which current flows, for example, the voltage across a switched output of a device.

Window function

The power-good range is set with the window function. The user defines the switch range by means of an upper and lower window limit.

Wire-break

A wire break occurs when a cable is interrupted in a closed electrical circuit (see also 'Input circuit monitoring').

Wire-break threshold

Sensors according to EN 60947-5-6 ensure a minimum flow of 0.05 mA This current is used for detecting wire breaks and represents the wire-break threshold.

Zero signal (0 signal)

A "zero signal" is the signal level (e.g. in Volts) that a device requires to detect the input pulse as a zero signal (e.g. 0…3 V) (see also 'On signal').

Index of types

Type	Ident No.	Page
6ES7972-0BA12-0XA0	6890934	131
6GK1901-1BB10-2AA0/FC-RJ45	6780031	141
AI401Ex	6884204	196
AI40-N	6884215	258
AI41EX	6884020	198
AI41-N	6884216	260
AI43EX	6884137	200
AI43-N	6884217	262
AIH40EX	6884001	204
AIH40-N	6884219	266
AIH41EX	6884005	206
AIH41-N	6884220	268
AO401Ex	6884205	202
AO40-N	6884218	264
AOH40EX	6884003	208
AOH40-N	6884221	270
B4151-0/13.5	6904715	145
B4151-0/9	6904717	145
B4251-0/9	6901113	145
B8151-0/9	6904604	146
B8251-0/9	6904603	146
BIC-44-E424	6604407	141
BK4140-0/9	6914551	146
BL20-16DI-24VDC-P	6827014	66
BL20-16DO-24VDC-0.5A-P	6827027	84
BL20-1RS232	6827169	112
BL20-1RS485/422	6827165	114
BL20-1SSI	6827166	116
BL20-2AIH-I	6827331	90
BL20-2AI-I(0/4…20MA)	6827021	88
BL20-2AI-PT/NI-2/3	6827017	94
BL20-2AI-THERMO-PI	6827020	96
BL20-2AI-U(-10/0…+10VDC)	6827022	92
BL20-2AOH-I	6827332	106
BL20-2AO-I(4…20MA)	6827034	104
BL20-2AO-U(-10/0…+10VDC)	6827033	108
BL20-2DI-120/230VAC-P	6827011	54
BL20-2DO-120/230VAC-0.5A	6827137	74
BL20-2DO-24VDC-0.5A-N	6827025	70
BL20-2DO-24VDC-2A-P	6827026	72
BL20-2DO-R-CO	6827030	76
BL20-2RFID-A	6827233	120
BL20-2RFID-S	6827306	122

Type	Ident No.	Page
BL20-32DI-24VDC-P	6827015	68
BL20-32DO-24VDC-0.5A-P	6827220	86
BL20-4AI-U/I	6827217	98
BL20-4DI-24VDC-N	6827013	58
BL20-4DI-24VDC-P	6827012	56
BL20-4DI-NAMUR	6827212	60
BL20-4DO-24VDC-0.5A-P	6827023	78
BL20-ABPL	6827123	127
BL20-ANBZ-BL	6827072	128
BL20-ANBZ-BR	6827076	128
BL20-ANBZ-GN	6827074	128
BL20-ANBZ-GN/GE-BED	6827078	128
BL20-ANBZ-RT	6827073	128
BL20-ANBZ-RT/BL-BED	6827077	128
BL20-ANBZ-SW	6827075	128
BL20-ANBZ-WS	6827079	128
BL20-BR-24VDC-D	6827006	46
BL20-BR-24VDC-RED	6827366	48
BL20-E-16DI-24VDC-P	6827231	64
BL20-E-16DO-24VDC-0.5A-P	6827230	82
BL20-E-2CNT-2PWM	6827341	118
BL20-E-4AI-TC	6827367	100
BL20-E-4AO-U/I	6827328	110
BL20-E-4IOL	6827385	124
BL20-E-8AI-U/I-4PT/NI	6827325	102
BL20-E-8DI-24VDC-P	6827227	62
BL20-E-8DO-24VDC-0.5A-P	6827226	80
BL20-E-GW-CO	6827252	24
BL20-E-GW-DN	6827301	28
BL20-E-GW-DP	6827250	20
BL20-E-GW-EC	6827380	36
BL20-E-GW-EN	6827329	32
BL20-E-GW-PN	6827377	34
BL20-E-GW-RS-MB/ET	6827381	30
BL20-GWBR-CANOPEN	6827167	22
BL20-GWBR-DNET	6827168	26
BL20-GW-DPV1	6827234	18
BL20-GW-EN	6827237	38
BL20-GW-EN-IP	6827247	40
BL20-LABEL-BLOCK	6827071	127
BL20-LABEL-SCHEIBE	6827070	127
BL20-PF-120/230VAC-D	6827008	52
BL20-PF-24VDC-D	6827007	50

types

Type	Ident No.	Page
BL20-PG-EN	6827249	42
BL20-PG-EN-IP	6827248	44
BL20-QV/1	6827104	127
BL20-QV/2	6827105	127
BL20-QV/3	6827106	127
BL20-QV/4	6827107	127
BL20-QV/5	6827108	127
BL20-QV/6	6827109	127
BL20-QV/7	6827110	127
BL20-QV/8	6827111	127
BL20-WEW-35/2-SW	6827124	127
BM1	6884036	289
BM-N	6884226	289
BM-PS	6884044	289
BMSWS8251-8.5	6904724	131
BMWS8251-8.5	6904723	131
BS3511/KLBUE4-31.5	6827342	126
BS4140-0/9	6914550	145
BS4151-0/13.5	6904716	145
BS4151-0/9	6904718	145
BS4251-0/9	6901112	145
BS8151-0/9	6904613	146
BS8251-0/9	6904615	146
D9T-RS485	6890942	288
D9T-RS485IS	6890944	288
D9T-RS485PG	6890943	288
DF20EX	6884061	190
DF20-N	6884212	250
DI401EX	6884232	192
DI40-N	6884213	252
DM80EX	6884006	188
DM80-N	6884211	248
DO401EX	6884203	194
DO40-N	6884214	254
DO60R-N	6884196	256
EC-FKDW4.54-0.5/16	8030752	132
EC-FKFDW4.54-0.5/16	8030753	132
EC-FSDW4.54-0.5/16	8030756	132
EC-FSFDW4.54-0.5/16	8030757	132
ELST-M20EX	6884033	289
ELVA-M20EX	6884110	289
FDN20-16S	6611312	168
FDN20-16XSG	6611373	170

Type	Ident No.	Page
FDN20-4S-4XSG	6611359	164
FDN20-4S-4XSG-E	6611343	166
FDN20-BKT-DIN	6931105	176
FDN-DN1	6603596	134
FDP20-16S	6611465	156
FDP20-16S-T	6611485	158
FDP20-16XSG	6611466	160
FDP20-16XSG-T	6611486	162
FEN20-16DXP	6931089	174
FEN20-4DIP-4DXP	6931090	172
FK57	6602216	147
FKDW4.54-0.5	8015777	133
FKFDW4.54-0.5	8016041	133
FKM-FS57-M12	6602223	147
FKSDD-RJ45SF-44	6611523	141
FKW4.54-0.5	8016042	133
FKW5L	8016718	133
FKW-FSW45-M12	6602309	132
FS57	6602314	147
FSDW4.54-0.5	8015776	133
FSFDW4.54-0.5	8016043	133
FSM-2FKM57	6622101	143
FSW4.54-0.5	8016038	132
FSW5L	8016717	133
FW-D9TLEDKU9PG-W-FC-ME-SH-8.5	6604220	131
FW-D9TLEDKU9XX-G-FC-ME-SH-8.5	6604221	132
FW-M12KU5D-G-SB-ME-SH-8	6604219	141
FW-M12KU5W-G-ZF-ME-SH-9	6604210	131
FW-M12ST5D-G-SB-ME-SH-8	6604218	141
FW-M12ST5W-G-ZF-ME-SH-9	6604211	131
GDP-IS/FW2.2	6884210	214
GDP-N /FW2.2	6884224	276
GDP-NI/FW2.2	6884225	216
I/O-ASSISTANT-KABEL-BL20/BL67	6827133	126
IM1-121EX-R	7541229	310
IM1-121EX-T	7541230	312
IM1-12EX-MT	7541228	302
IM1-12EX-R	7541226	304
IM1-12EX-T	7541227	306
IM1-12-T	7541268	308
IM12-22EX-R	7541233	324
IM12-22EX-R/230VAC	7505641	326
IM12-22EX-R/24VDC	7505640	328

Type	Ident No.	Page
IM1-22EX-MT	7541213	314
IM1-22EX-R	7541231	316
IM1-22EX-R/K51	7541238	320
IM1-22EX-T	7541232	318
IM1-22-R	7541234	322
IM1-231EX-R	7541239	330
IM1-451EX-R	7541188	336
IM1-451EX-T	7541189	338
IM1-451-R	7541190	332
IM1-451-T	7520721	334
IM21-14-CDTRI	7505650	340
IM21-14EX-CDTRI	7505651	342
IM31-11EX-I	7506320	344
IM31-11EX-U	7506327	346
IM31-11-I	7506323	348
IM31-12EX-I	7506321	352
IM31-12-I	7506324	350
IM31-22EX-I	7506322	356
IM31-22EX-U	7506326	358
IM31-22-I	7506325	354
IM33-11EX-HI	7506443	368
IM33-11EX-HI/24VDC	7506440	362
IM33-11-HI/24VDC	7506447	360
IM33-12EX-HI	7506444	372
IM33-12EX-HI/24VDC	7506446	366
IM33-14EX-CDRI	7560015	370
IM33-22EX-HI	7506445	378
IM33-22EX-HI/24VDC	7506441	376
IM33-22-HI/24VDC	7506564	374
IM33-FSD-EX/L	7506433	364
IM34-11-CI	7506638	380
IM34-11EX-CI	7506633	382
IM34-11Ex-CI/24VDC	7506637	386
IM34-11EX-CI/K51	7506635	394
IM34-11EX-CI/K60	7506636	396
IM34-11EX-I	7506630	384
IM34-12EX-CRI	7506632	388
IM34-12Ex-CRi/K63	7506605	392
IM34-12EX-RI	7506631	390
IM34-14EX-CDRI	7506634	398
IM35-11EX-HI	7506517	404
IM35-11EX-HI/24VDC	7506516	400
IM35-22EX-HI	7506518	406
IM35-22EX-HI/24VDC	7506515	402
IM36-11EX-I/24VDC	7509525	408
IM36-11EX-U/24VDC	7509526	410
IM36-22EX-I	7509528	412
IM36-22EX-U	7509530	414
IM-3-CJT	6900524	498
IM43-13-R	7540040	422
IM43-13-SR	7540041	420
IM43-14-CDRI	7540045	424
IM43-14-RI	7540042	418
IM43-14-SRI	7540043	416

Type	Ident No.	Page
IM72-11EX/L	7520703	426
IM72-22EX/L	7520702	428
IM73-12-R/230VAC	7520511	430
IM73-12-R/24VUC	7520712	432
IM73-22Ex-R/24VUC	7520513	434
IM82-24-10	7545043	440
IM82-24-2.5	7545041	436
IM82-24-20	7545044	442
IM82-24-5.0	7545042	438
IMC-AI-11EX-I/L	7560004	492
IMC-AIA-11EX-I/24VDC	7560009	494
IMC-AO-11EX-I/L	7560006	496
IM-CC-3X2BK/2BK	7541218	498
IM-CC-3X2BU/2BK	6900475	498
IM-CC-5X2BK/2BK	7541219	498
IM-CC-5X2BU/2BK	7504031	498
IMC-DI-22EX-PNC/24VDC	7560010	488
IMC-Di-22Ex-PNO/24VDC	7560003	486
IMC-DO-11EX/L	7560008	490
IMC-SG	7560016	499
IME-AI-11Ex-Hi/24VDC	7541198	450
IME-Ai-11Ex-Hi/L	7541192	448
IME-AiA-11Ex-Hi/24VDC	7541193	452
IME-AO-11Ex-Hi/L	7541194	456
IME-DI-22Ex-R/24VDC	7541191	446
IME-DI-22EX-T/24VDC	7541197	444
IME-DO-11EX/L	7541196	458
IME-DO-22EX/L	7541195	460
IME-TI-11Ex-Ci/24VDC	7541199	454
IM-PROG	6890422	498
IM-PROG III	7525111	498
IMS-AI-DLI-22-DLI/L	7504011	464
IMS-AI-UNI/24V	7504009	462
IMSP-1x2-24	7504050	468
IMSP-2-12	7504054	470
IMSP-2-24	7504052	472
IMSP-2x2-24	7504051	474
IMSP-4-12	7504055	478
IMSP-4-24	7504053	476
IMS-TI-PT100/24V	7504012	466
JBBS-57-E411	6603378	136
JBBS-57-E811-VM	6602068	136
LN1/2-14NPT/10	6961002	139
LOCKNUT G1/2"	6900493	148
MINI USB 2.0 cable 1.5m	6827388	126
MODEX-SCHALTKLEMME	6884069	290
MODEX-TRENNRELAIS	6884070	290
MT08-2G	9100684	228
MT08-3G	9100680	234
MT08-N	9100689	280
MT16-2G	9100687	230
MT16-2G/MSA	9100688	232
MT16-3G	9100681	236
MT16-N	9100686	282

Type	Ident No.	Page
MT24-3G	9100682	238
MT24-N	9100683	284
MT-PPS	9100516	226
OC11Ex/2G.2	6890427	242
OC11Ex/3G.2	6890428	244
OC11-LINKCABLE	8031339	288
PB-08/03	6900370	498
PB-16/03	6900371	498
PB-32/03	6900372	498
PDP-TRA	6825346	130
PPSA115EX	6900294	222
PPSA230EX	6900293	220
PSD24EX	6881721	218
PSM24-3G	6881722	224
PSM24-N	6881723	278
PSU67-11-2420/M	6884140	142
PSU67-11-2440/M	6884141	142
PSU67-11-2480/M	6884147	142
PSU67-12-2480/M	6884148	142
REP-DN	6825349	134
REP-DP 0002	6825354	130
RJ45-FKSDD-441-0.5M/S2174	6914221	141
RKE57-TR2	6602629	134
RKF57	6602217	147
RKFL46	6915086	147
RKM40-RKM40-L-RSM40	6914866	143
RKM57-TR2	6602065	134
RKM-RKM57	6603372	144
RKSW-2RSSW45-0001	6914180	130
RKSWS4.5[5]-2RSSWS	6999021	130
RSE57-TR2	6602308	134
RSF57	6602342	147
RSFL46	6914836	147
RSF-RKF-40/22	6915014	146
RSF-RKF-57/22	6602218	146
RSM-2RKM40	6914828	143
RSM-2RKM50	6914950	142
RSM-2RKM57	6602007	142
RSM-2RKM57-DGT	6602482	143
RSM50-WKM50-0.3XOR-RKM50	6914951	143
RSM52-WKM52-0.5-RKM50	6914160	143
RSM57-FK4.5	6603454	144
RSM57-TR2	6602011	134
RSM-FKM-RKM57	6602392	142
RSM-RKM57-WSM40-PST	6602376	135
RSM-RSM57	6603371	144
RSS4.5-PDP-TR	6601590	130
S89/VB2-Befestigungsset	8036078	144
SC12EX	6884047	240
SC-M12/3GD	6900390	499
SE20-84MT-RJ822	6607011	140
SE20-84X-RJ522	6607005	140
SE20-84XT-RJ422-FO	6607006	140
SE20-84XT-RJ822	6607012	140
SE-44M-E924	6607004	140
SE-44X-E524	6607003	140
SE-44X-E924	6607002	140
SK8	6900360	289
STB16-4RC/1.5-BK	9909625	289
STB16-4RC/1.5-BU	9909623	288
STB16-4RS/1.5-BK	9909624	288
STB16-4RS/1.5-BU	9909622	288
TI40Ex	6884000	210
TI40-N	6884222	272
TI41Ex	6884190	212
TI41-N	6884223	274
USB 2.0 extension 5m	6827389	126
USB 2.0 extension active 5m	6827390	126
USB-2-RS232 II	7504030	126
VB2-FKM-FKM-FSM57	6602331	143
VB2-FKM-FKM-RSC572-1M	6602613	144
VB2-FKM-RKC-RSC572-0.5M-0.5M	6602490	144
VB2-FSW/RSSW-RKSW455-0.5M-0.5M	6996038	130
VB2-FSW-FKW-FSW-45	6996009	130
VB2-RKC572-1M-FKM-FSM	6996011	143
WM1 WIDERSTANDSMODUL	912101	498
WSM-RKM57	6603370	144
ZBW5-2	6827129	126

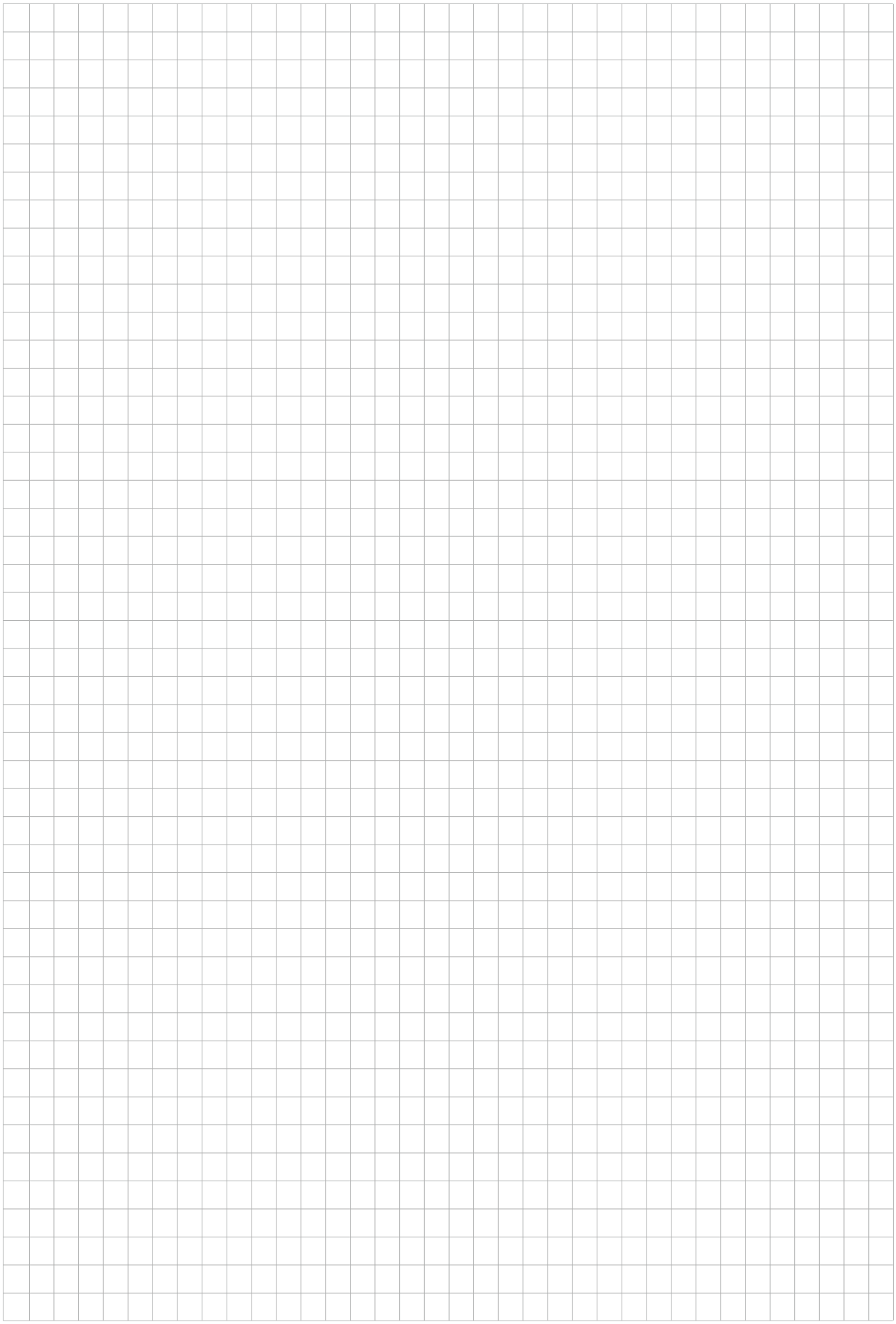

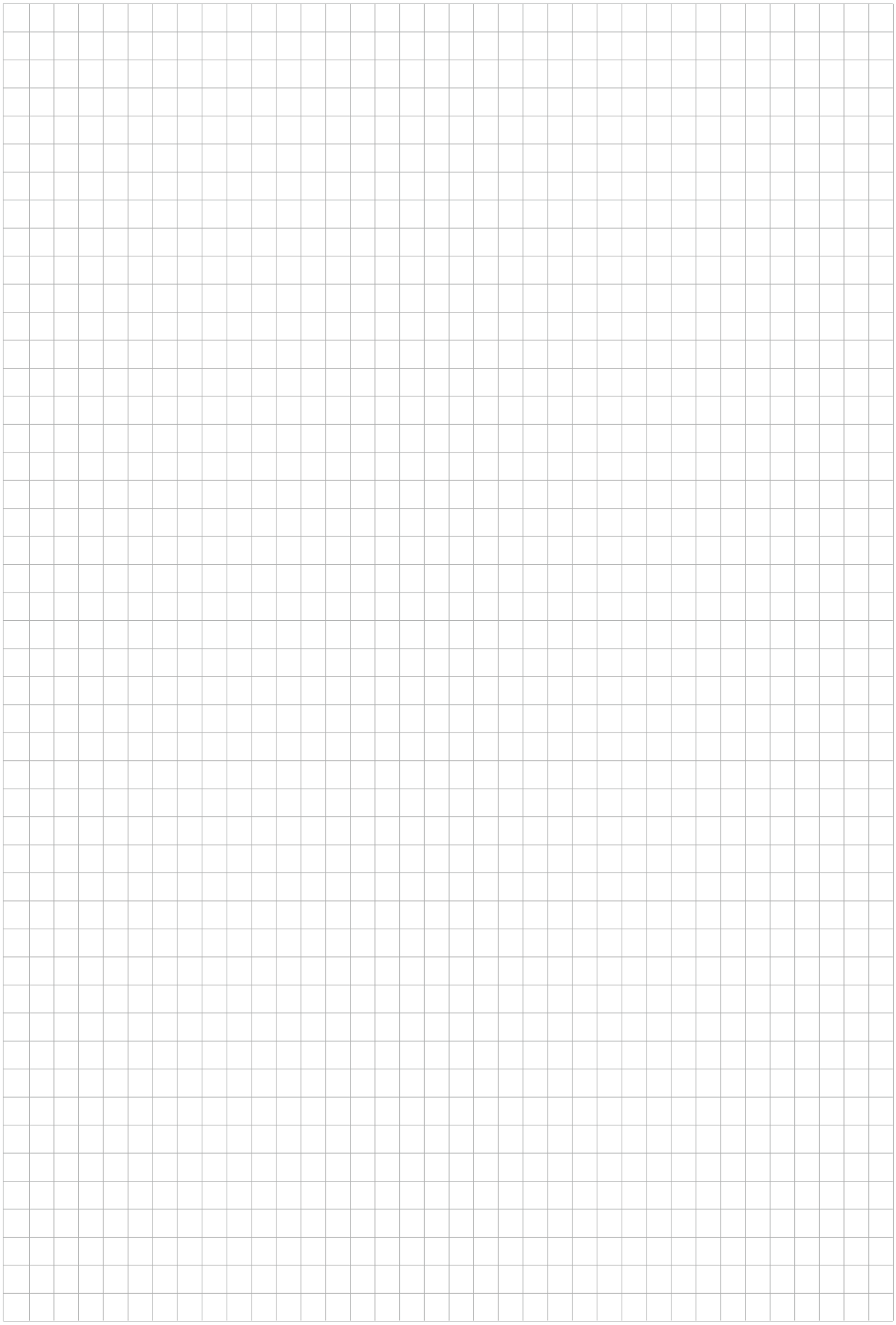

TURCK

Industrial
Automation



Your Global
Automation Partner!

WORLDWIDE HEADQUARTERS

Hans Turck GmbH & Co. KG
Witzlebenstr. 7
45472 Muelheim an der Ruhr
Germany
Tel. +49 208 4952-0
Fax +49 208 4952-264
E-Mail more@turck.com
Internet www.turck.com

D301331 2014/08