Brand of NTN corporation

Technical data

USPE212

Bearing units



Grey cast housing, radial insert ball bearing with socket set screws, single lip seal

KIT CONTENT

US212G2, PE212

VISUAL (S)

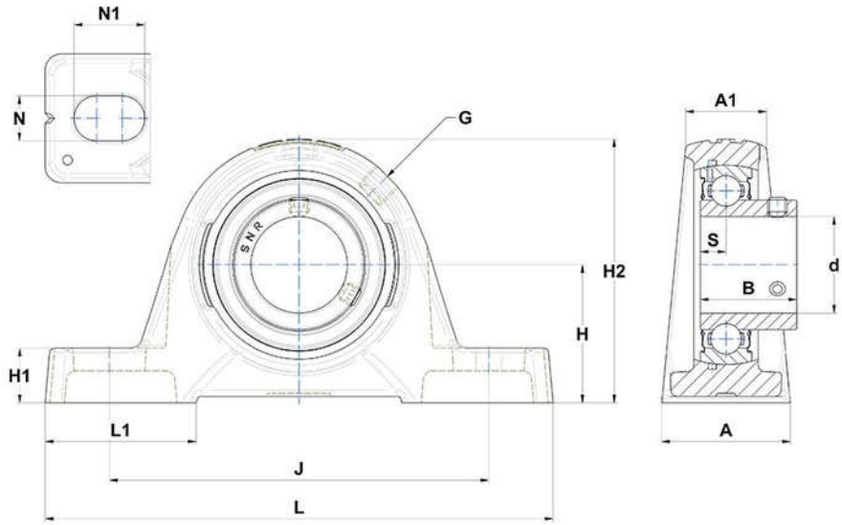

PRODUCT DEFINITION

Brand	SNR
A - Housing width	60 mm
A1 - Housing top width	42 mm
B - Width of Inner Ring	53,7 mm
d - Shaft diameter	60 mm
G - Grease fitting	R1/8"

NTN Europe
1 rue des Usines · BP 2017 · 74010 Annecy Cedex · France · Tel. +33 (0)4 50 65 30 00
S.A. au capital de 322 639 919 € · RCS ANNECY B 325 821 072 · Id. Fiscale : FR 48 325 821 072
SIRET 325 821 072 00015 · Code APE 2815 Z · Code NACE 28.15

PRODUCT DEFINITION	
H - Distance mounting base to centerline spheric. seating diam.	69,9 mm
H1 - Housing foot height	25 mm
H2 - Housing height	140 mm
J - Mounting holes distance	190 mm
L - Housing length	240 mm
L1 - Housing foot length	71 mm
N - Mounting hole dimension	18 mm
N1 - Mounting hole length	28 mm
S - Distance front side/bearing centre	14,9 mm

PRODUCT PERFORMANCE	
C - Dynamic load rating	52500000 mN
C0 - Static load rating	32800000 mN
Operating temperature min.	253,15 °K
Operating temperature max.	373,15 °K

OTHER FEATURES	
Mass	4,6 kg
Recommended tightening torque for set screw	22 N-m