Agilent Technologies

Agilent 34398A RS-232 Cable Kit
Agilent 34399A RS-232 Adapter Kit

Agilent 34398A RS-232 Cable Kit Contains a 9-pin female to 9-pin female Null Modem (printer) cable and one adapter. Use the cable and adapter to connect Agilent instruments with 9-pin male RS-232 connectors to most PCs or printers. The cable kit contains:

- ☐ Null modem cable, 9-pin F to 9-pin F, 2.5 meters (8 ft. 2.5 in.), Agilent Part Number F1047-80002.
- ☐ Adapter, 9-pin M to 25-pin F (straight through), for PCs and printers, Agilent Part Number 5181-6641.
- ☐ This *Reference Guide*, Agilent Part Number 34398-90001.

Agilent 34399A RS-232 Adapter Kit Contains four adapters to change a 9-pin female Null Modem (printer) cable to a 25-pin PC/printer cable, or to a 25-pin or 9-pin Modem cable. The adapter kit is intended for use with the Agilent 34398A Cable Kit. The adapter kit contains:

- ☐ Adapter, 9-pin M to 25-pin F (straight through), for PCs and printers, Agilent Part Number 5181-6641.
- ☐ Adapter, 9-pin M to 25-pin M (straight through), PCs and printers, Agilent Part Number 5181-6640.
- ☐ Adapter, 9-pin M to 25-pin M, converts Null modem cable to Modem cable, Agilent Part Number 5181-6642.
- ☐ Adapter, 9-pin M to 9-pin M, converts Null modem cable to Modem cable, Agilent Part Number 5181-6639.
- ☐ This *Reference Guide*, Agilent Part Number 34398-90001.

Copyright © Agilent Technologies 2000, 2003
Printed in Malaysia July 2003 E0703

34398-90001

Products Tested The following Agilent instruments have been tested to operate properly with a PC, printer, and modem using the cable and adapter kits.

- 33120A Function Generator/Arbitrary Waveform Generator
- 34401A Multimeter
- 53131A Universal Counter

Cable and Adapter Pin Diagrams The following diagrams show the pin connections for the Null Modem cable (part number F1047-80002) with each of the adapters.

9-Pin F to
9-Pin F Cable

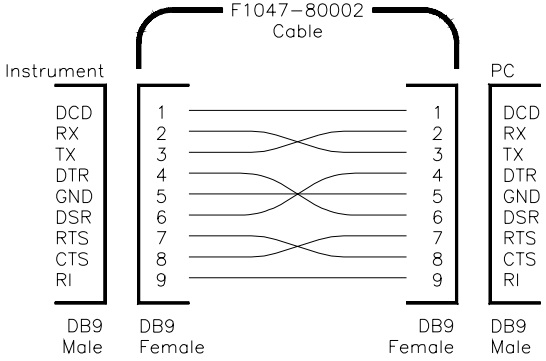

Cable With
25-Pin F Adapter

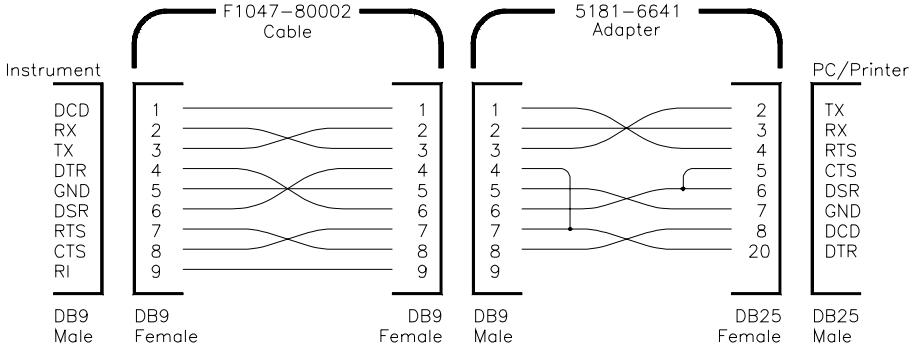

Cable With
25-Pin M Adapter

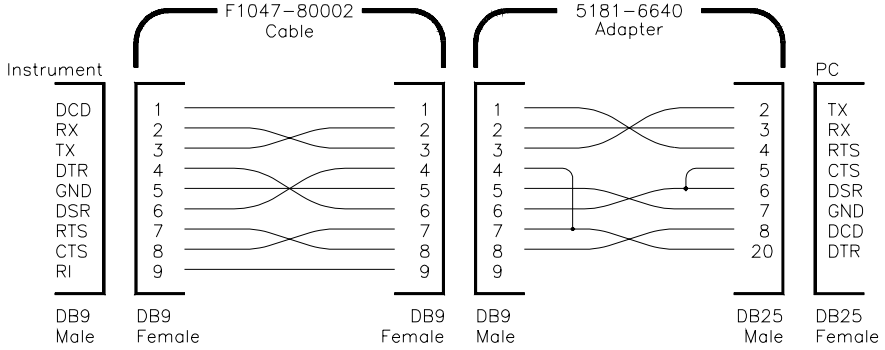

Cable With
25-Pin M Adapter

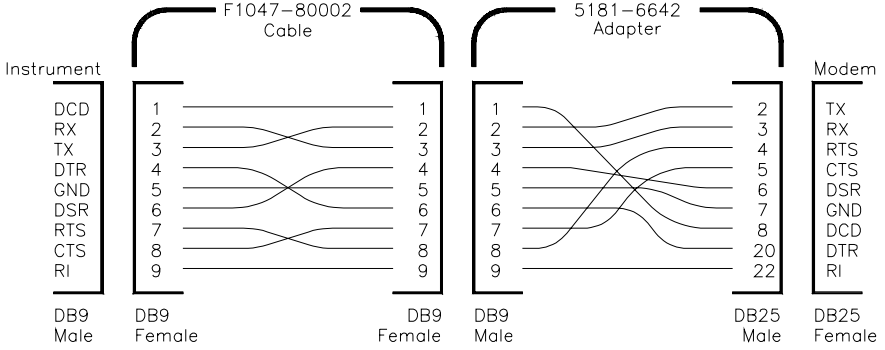

Cable With
9-Pin M Adapter

