PERFORMANCE
MADE
SMARTER

Product manual
4116
Universal transmitter



TEMPERATURE | I.S. INTERFACES | COMMUNICATION INTERFACES | MULTIFUNCTIONAL | ISOLATION | DISPLAY

No. 4116V106-UK
From serial no.: 191019001

PR electronics

6 Product Pillars
to meet your every need

Individually outstanding, unrivalled in combination

With our innovative, patented technologies, we make signal conditioning smarter and simpler. Our portfolio is composed of six product areas, where we offer a wide range of analog and digital devices covering over a thousand applications in industrial and factory automation. All our products comply with or surpass the highest industry standards, ensuring reliability in even the harshest of environments and have a 5-year warranty for greater peace of mind.



Temperature

Our range of temperature transmitters and sensors provides the highest level of signal integrity from the measurement point to your control system. You can convert industrial process temperature signals to analog, bus or digital communications using a highly reliable point-to-point solution with a fast response time, automatic self-calibration, sensor error detection, low drift, and top EMC performance in any environment.



I.S. Interface

We deliver the safest signals by validating our products against the toughest safety standards. Through our commitment to innovation, we have made pioneering achievements in developing I.S. interfaces with SIL 2 Full Assessment that are both efficient and cost-effective. Our comprehensive range of analog and digital intrinsically safe isolation barriers offers multifunctional inputs and outputs, making PR an easy-to-implement site standard. Our backplanes further simplify large installations and provide seamless integration to standard DCS systems.



Communication

We provide inexpensive, easy-to-use, future-ready communication interfaces that can access your PR installed base of products. All the interfaces are detachable, have a built-in display for readout of process values and diagnostics, and can be configured via push-buttons. Product specific functionality includes communication via Modbus and Bluetooth and remote access using our PR Process Supervisor (PPS) application, available for iOS and Android.



Multifunction

Our unique range of single devices covering multiple applications is easily deployable as your site standard. Having one variant that applies to a broad range of applications can reduce your installation time and training, and greatly simplify spare parts management at your facilities. Our devices are designed for long-term signal accuracy, low power consumption, immunity to electrical noise and simple programming.



Isolation

Our compact, fast, high-quality 6 mm isolators are based on microprocessor technology to provide exceptional performance and EMC-immunity for dedicated applications at a very low total cost of ownership. They can be stacked both vertically and horizontally with no air gap separation between units required.



Display

Our display range is characterized by its flexibility and stability. The devices meet nearly every demand for display readout of process signals and have universal input and power supply capabilities. They provide a real-time measurement of your process value no matter the industry and are engineered to provide a user-friendly and reliable relay of information, even in demanding environments.

Universal transmitter 4116

Table of contents

Warning 4
Symbol identification 5
Safety instructions 5
How to demount system 4000 7
When front LED lights red / display shows AO.ER 7
Application 8
Technical characteristics 8
Mounting / installation / programming 8
Applications 9
PR 4500 display / programming front 10
Mounting / demounting the PR 4500 10
Order 11
Accessories 11
Electrical specifications 11
Visualisation in the PR 4500 of sensor error detection and input signal outside range 15
    Sensor error detection limits 15
    Error indications 16
Connections 17
Block diagram 18
Configuration / operating the function keys 19
Routing diagram 23
Routing diagram, advanced settings (ADV.SET) 26
Routing diagram, manual deactivation of the latch function 27
Help text overview 28
Graphic depiction of latch function setpoint 30
Graphic depiction of latch function window 31
Graphic depiction of relay action setpoint 32
Graphic depiction of relay action window 32
Document history 33

Warning



GENERAL

This device is designed for connection to hazardous electric voltages. Ignoring this warning can result in severe personal injury or mechanical damage.
To avoid the risk of electric shock and fire, the safety instructions of this guide must be observed and the guidelines followed. The specifications must not be exceeded, and the device must only be applied as described in the following.
Prior to the commissioning of the device, this installation guide must be examined carefully.
Only qualified personnel (technicians) should install this device. If the equipment is used in a manner not specified by the manufacturer, the protection provided by the equipment may be impaired.

Warning



HAZARD-OUS VOLTAGE

Until the device is fixed, do not connect hazardous voltages to the device. The following operations should only be carried out on a disconnected device and under ESD safe conditions:

General mounting, connection and disconnection of wires.
Troubleshooting the device.

Repair of the device and replacement of circuit breakers must be done by PR electronics A/S only.



CAUTION

Warning



INSTAL-LATION

To keep the safety distances, the relay contacts on the device must not be connected to both hazardous and non-hazardous voltages at the same time.

Warning



Do not open the front plate of the device as this will cause damage to the connector for the display / programming front PR 4500.
This device contains no DIP-switches or jumpers.
SYSTEM 4000 must be mounted on a DIN rail according to DIN EN 60715.

Symbol identification



Triangle with an exclamation mark: Warning / demand. Potentially lethal situations. Read the manual before installation and commissioning of the device in order to avoid incidents that could lead to personal injury or mechanical damage.



The CE mark proves the compliance of the device with the essential requirements of the directives.



The double insulation symbol shows that the device is protected by double or reinforced insulation.

Safety instructions

Definitions

Hazardous voltages have been defined as the ranges: 75 to 1500 Volt DC, and 50 to 1000 Volt AC.
Technicians are qualified persons educated or trained to mount, operate, and also trouble-shoot technically correct and in accordance with safety regulations.
Operators, being familiar with the contents of this manual, adjust and operate the knobs or potentiometers during normal operation.

Receipt and unpacking

Unpack the device without damaging it and check whether the device type corresponds to the one ordered. The packing should always follow the device until this has been permanently mounted.

Environment

Avoid direct sun light, dust, high temperatures, mechanical vibrations and shock, and rain and heavy moisture. If necessary, heating in excess of the stated limits for ambient temperatures should be avoided by way of ventilation.
The device must be installed in pollution degree 2 or better.
The device is designed to be safe at least under an altitude up to 2 000 m.
The device is designed for indoor use.

Mounting

Only technicians who are familiar with the technical terms, warnings, and instructions in the manual and who are able to follow these, should connect the device. Should there be any doubt as to the correct handling of the device, please contact your local distributor or, alternatively,

PR electronics A/S
www.prelectronics.com

Mounting and connection of the device should comply with national legislation for mounting of electric materials, i.e. wire cross section, protective fuse, and location.

Stranded wire should be installed with an insulation stripping length of 5 mm or via a suitable insulated terminal such as a bootlace ferrule.

Descriptions of input / output and supply connections are shown in the block diagram and side label.

The following apply to fixed hazardous voltages-connected devices:

The max. size of the protective fuse is 10 A and, together with a power switch, it should be easily accessible and close to the device. The power switch should be marked with a label indicating that it will switch off the voltage to the device.

Year of manufacture can be taken from the first two digits in the serial number.

UL installation requirements

Use 60/75°C copper conducters only
For use only in pollution degree 2 or better
Max. ambient temperature . . . . . 60°C
Max. wire size. . . . . AWG 26-14
UL file number E231911

Calibration and adjustment

During calibration and adjustment, the measuring and connection of external voltages must be carried out according to the specifications of this manual. The technician must use tools and instruments that are safe to use.

Normal operation

Operators are only allowed to adjust and operate devices that are safely fixed in panels, etc., thus avoiding the danger of personal injury and damage. This means there is no electrical shock hazard, and the device is easily accessible.

Cleaning

When disconnected, the device may be cleaned with a cloth moistened with distilled water.

Liability

To the extent the instructions in this manual are not strictly observed, the customer cannot advance a demand against PR electronics A/S that would otherwise exist according to the concluded sales agreement.

How to demount system 4000

First, remember to demount the connectors with hazardous voltages.

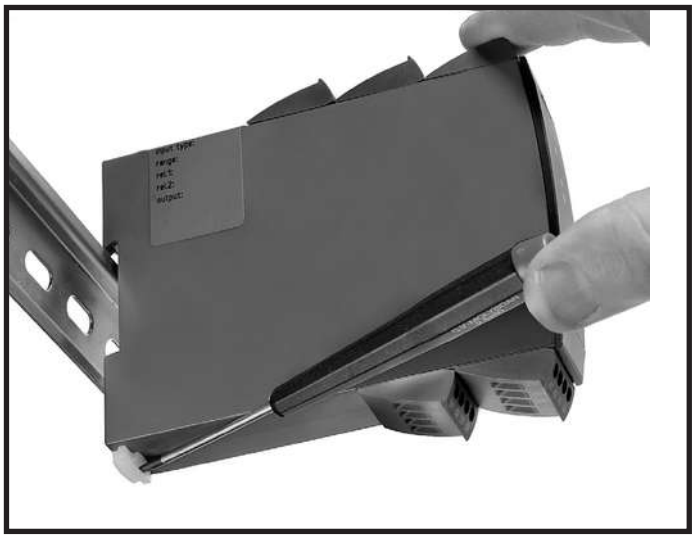

Picture 1:
The device is detached from the DIN rail by moving the bottom lock down.

When front LED lights red / display shows AO.ER

PR 4116 is designed as a SIL 2 device with a high safety level. Therefore, a continuous measurement of the outgoing current is carried out on a 4...20 mA and 20...4 mA output signal. If the current output signal is different from the internal calculated output value or the current output is 0 (due to e.g. an open circuit breakage), an error mode switches on the red front LED and disables the relays. This function is not a default option but must be actively selected via the programming menu (S4-20 & S20-4). The error mode can only be reset by switching off and then switching on the supply voltage to the device.

Universal transmitter
4116

- Input for RTD, TC, Ohm, potentiometer, mA and V
- 2-wire supply > 16 V
- FM-approved for installation in Div. 2
- Output for current, voltage and 2 relays
- Universal AC or DC supply

Application

- Linearized, electronic temperature measurement with RTD or TC sensor.
- Conversion of linear resistance variation to a standard analog current / voltage signal, i.e. from solenoids and butterfly valves or linear movements with attached potentiometer.
- Power supply and signal isolator for 2-wire transmitters.
- Process control with 2 pairs of potential-free relay contacts and analog output.
- Galvanic separation of analog signals and measurement of floating signals.
- The 4116 is designed according to strict safety requirements and is thus suitable for application in SIL 2 installations.
- Suitable for the use in systems up to Performance Level "d" according to ISO-13849.

Technical characteristics

- When 4116 is used in combination with the PR 4500 display / programming units, all operational parameters can be modified to suit any application. As the 4116 is designed with electronic hardware switches, it is not necessary to open the device for setting of DIP-switches.
- A green / red front LED indicates normal operation and malfunction. A yellow LED is ON for each active output relay.
- Continuous check of vital stored data for safety reasons.
- 4-port 2.3 kVAC galvanic isolation.

Mounting / installation / programming

- Very low power consumption means units can be mounted side by side without an air gap – even at 60°C ambient temperature.
- Configuration, monitoring, 2-point process calibration and more are accomplished using PR's 4500 detachable displays.
- All programming can be password-protected.

Applications

Input signals:

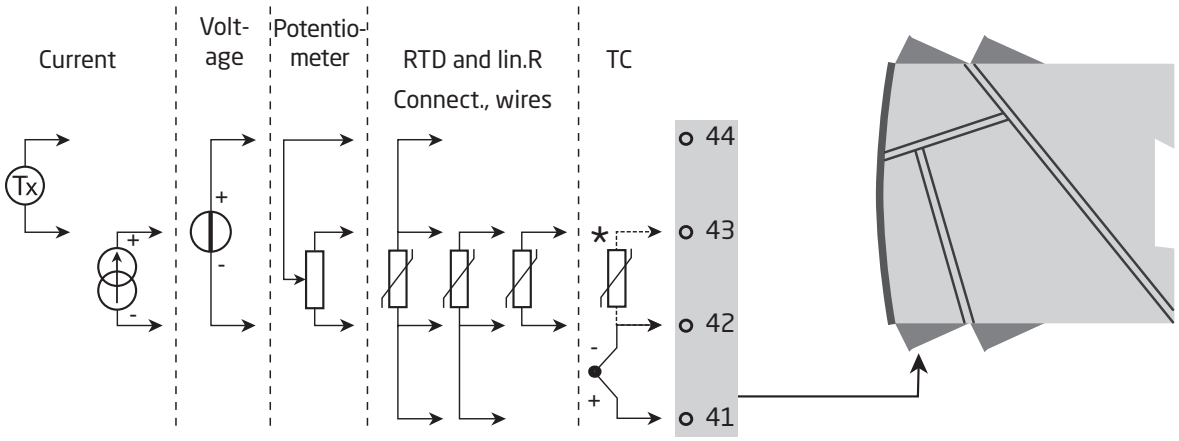

Order separately: 5910 CJC connector.
See the connection drawing on page 17.

Output signals:

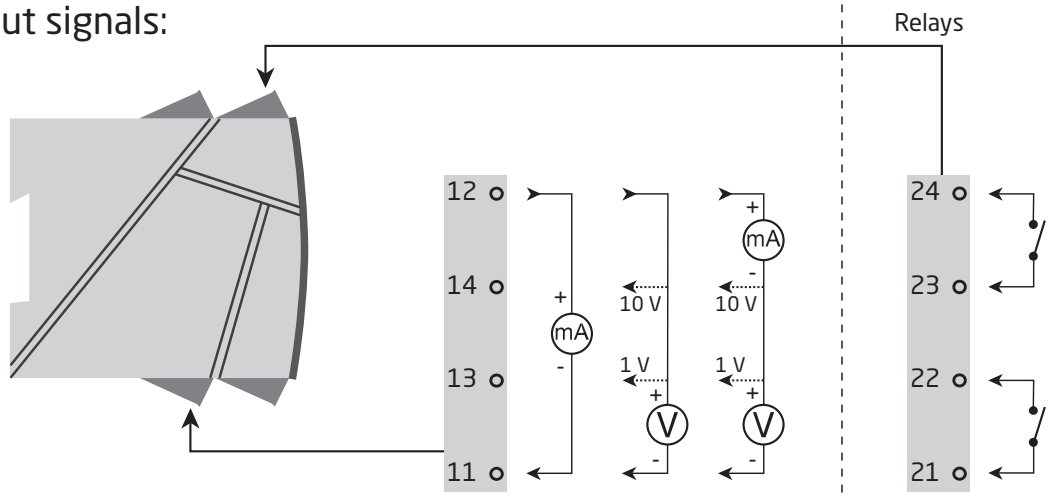

Analog, 0/4...20 mA and voltage

Supply:

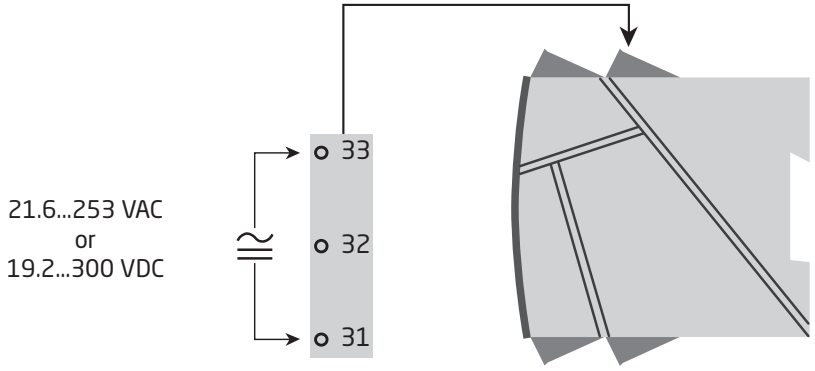

PR 4500 display / programming front





Functionality

The simple and easily understandable menu structure and the explanatory help texts guide you effortlessly and automatically through the configuration steps, thus making the product very easy to use. Functions and configuration options are described in the section "Configuration / operating the function keys".

Application

- Communications interface for modification of operational parameters in 4116.
- Can be moved from one 4116 device to another and download the configuration of the first unit to subsequent units.
- Fixed display for readout of process data and status.

Technical characteristics

- LCD display with 4 lines:
  Line 1 (H=5.57 mm) shows the input signal.
  Line 2 (H=3.33 mm) shows the selected engineering unit.
  Line 3 (H=3.33 mm) shows analog output or TAG no.
  Line 4 shows status for communication and relays.
- Programming access can be blocked by assigning a password. The password is saved in the device in order to ensure a high degree of protection against unauthorized modifications to the configuration.

Mounting / demounting the PR 4500

1: Insert the tabs of the PR 4500 into the holes at the top of the device.
2: Hinge the PR 4500 down until it snaps into place.

Demounting of the PR 4500

3: Push the release button on the bottom of the PR 4500 and hinge the the PR 4500 out and up.
4: With the PR 4500 hinged up, remove from holes at the top of the device.

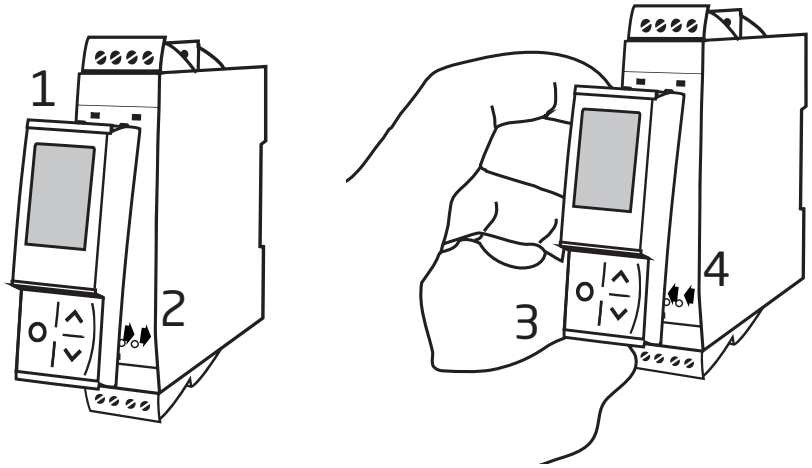

Order

4116 = Universal transmitter

Accessories

4510 = Display / programming front
4511 = Modbus communication enabler
4512 = Bluetooth communication enabler
5910 = CJC connector

Electrical specifications

Environmental conditions

Operating temperature	-20°C to +60°C
Storage temperature	-20°C to +85°C
Calibration temperature	20...28°C
Relative humidity	< 95% RH (non-cond.)
Protection degree	IP20

Installation in pollution degree 2 & measurement / overvoltage category II.

Mechanical specifications

Dimensions (HxWxD)	109 x 23.5 x 104 mm
Dimensions (HxWxD) w/ 4501 / 451x	109 x 23.5 x 116 / 131 mm
Weight approx.	175 g
DIN rail type	DIN EN 60715 - 35 mm
Wire size	0.13...2.08 mm^2 / AWG 26...14 stranded wire
Screw terminal torque	0.5 Nm
Vibration	IEC 60068-2-6
2...13.2 Hz	±1 mm
13.2...100 Hz	±0.7 g

Common electrical specifications

Supply voltage, universal	21.6...253 VAC, 50...60 Hz or 19.2...300 VDC
Fuse	400 mA SB / 250 VAC
Max. required power	≤ 2.5 W
Max. power dissipation	≤ 2.5 W
Isolation voltage - test	2.3 kVAC
Isolation voltage - working	250 VAC (reinforced) / 500 VAC (basic)
Programming	PR 4500
Signal dynamics, input / output	24 bit / 16 bit
Signal / noise ratio	> 60 dB (0...100 kHz)
Response time (0...90%, 100...10%):	
Temperature input	≤ 1 s
mA / V input	≤ 400 ms

Auxiliary supplies

2-wire supply (terminal 44...43)	25...16 VDC / 0...20 mA

Accuracy, the greater of general and basic values:

General values		
Input type	Absolute accuracy	Temperature coefficient
All	≤ ±0.1% of span	≤ ±0.01% of span / °C

Basic values		
Type	Basic accuracy	Temperature coefficient
mA	≤ ±4 µA	≤ ±0.4 µA / °C
Volt	≤ ±20 µV	≤ ±2 µV / °C
Pt100	≤ ±0.2°C	≤ ±0.01°C / °C
Linear resistance	≤ ±0.1 Ω	≤ ±0.01 Ω / °C
Potentiometer	≤ ±0.1 Ω	≤ ±0.01 Ω / °C
TC type: E, J, K, L, N, T, U	≤ ±1°C	≤ ±0.05°C / °C
TC type: R, S, W3, W5, LR	≤ ±2°C	≤ ±0.2°C / °C
TC type: B 85...200°C	≤ ±4°C	≤ ±0.4°C / °C
TC type: B 200...1820°C	≤ ±2°C	≤ ±0.2°C / °C

EMC - immunity influence. . . . . < ±0.5% of span
Extended EMC immunity:
NAMUR NE 21, A criterion, burst . . . . . < ±1% of span

Input specifications

RTD, linear resistance and potentiometer input

Input for RTD types:
Pt10, Pt20, Pt50, Pt100, Pt200, PT250, Pt300, Pt400, Pt500, Pt1000
Ni50, Ni100, Ni120, Ni1000, Cu10, Cu20, Cu50, Cu100

Input type	Min. value	Max. value	Standard
Pt10...Pt1000	-200°C	+850°C	IEC 60751
Ni50...Ni1000	-60°C	+250°C	DIN 43760
Cu10...Cu100	-200°C	+260°C	α = 0.00427
Lin. R	0 Ω	10000 Ω	-
Potentiometer	10 Ω	100 kΩ	-

Cable resistance per wire (max.), RTD . . . . . 50 Ω
Sensor current, RTD . . . . . Nom. 0.2 mA
Effect of sensor cable resistance (3- / 4-wire), RTD . . . . . < 0.002 Ω / Ω
Sensor error detection, RTD . . . . . Yes
Short circuit detection, RTD . . . . . < 15 Ω

TC input

Type	Min. value	Max. value	Standard
B	0°C	+1820°C	IEC 60584-1
E	-100°C	+1000°C	IEC 60584-1
J	-100°C	+1200°C	IEC 60584-1
K	-180°C	+1372°C	IEC 60584-1
L	-200°C	+900°C	DIN 43710
N	-180°C	+1300°C	IEC 60584-1
R	-50°C	+1760°C	IEC 60584-1
S	-50°C	+1760°C	IEC 60584-1
T	-200°C	+400°C	IEC 60584-1
U	-200°C	+600°C	DIN 43710
W3	0°C	+2300°C	ASTM E988-90
W5	0°C	+2300°C	ASTM E988-90
LR	-200°C	+800°C	GOST 3044-84

Cold junction compensation (CJC):
- via external sensor in connector 5910 . . . . . 20...28°C ≤ ±1°C
  -20...20°C / 28...70°C ≤±2°C
- via internal CJC sensor . . . . . ±(2.0°C + 0.4°C * Δt)

Δt = internal temperature - ambient temperature

Sensor error detection, all TC types . . . . . Yes

Sensor error current:
- when detecting . . . . . Nom. 2 µA
- else . . . . . 0 µA

Current input

Measurement range . . . . . 0...23 mA
Programmable measurement ranges . . . . . 0...20 and 4...20 mA
Input resistance . . . . . Nom. 20 Ω + PTC 50 Ω
Sensor error detection:
- Loop break 4...20 mA . . . . . Yes

Voltage input

Measurement range . . . . . 0...12 VDC
Programmable measurement ranges . . . . . 0...1 / 0.2...1 / 0...5 / 1...5 / 0...10 and 2...10 VDC
Input resistance, nom. . . . . 10 MΩ

Output specifications

Current output

Signal range (span) . . . . . 0...23 mA
Programmable signal ranges . . . . . 0...20 / 4...20 / 20...0 and 20...4 mA
Load (max.) . . . . . ≤ 800 Ω
Load stability . . . . . ≤ 0.01% of span / 100 Ω
Sensor error detection . . . . . 0 / 3.5 / 23 mA / none
NAMUR NE 43 Upscale / Downscale . . . . . 23 mA / 3.5 mA
Output limitation:
- on 4...20 and 20...4 mA signals . . . . . 3.8...20.5 mA
- on 0...20 and 20...0 mA signals . . . . . 0...20.5 mA

Current limit . . . . . ≤ 28 mA

Voltage output

Signal range . . . . . 0...10 VDC
Programmable signal ranges . . . . . 0...1 / 0.2...1 / 0...10 / 0...5 / 1...5 / 2...10 / 1...0 / 1...0.2 / 5...0 / 5...1 / 10...0 og 10...2 V
Load (min.) . . . . . 500 kΩ

of span = of the currently selected measurement range

Relay outputs

Relay functions	Setpoint, Window, Sensor error, Latch, Power and Off
Hysteresis	0...100%
On and Off delay	0...3600 s
Sensor error detection	Break / Make / Hold
Max. voltage	250 VAC / VDC
Max. AC current	2 A
Max. AC power	500 VA
Max. DC current, resistive load:	
@ U_{relay} ≤ 30 VDC	2 ADC
@ U_{relay} >30 VDC	[1380 x U_{relay}^{-2} x $1.0085^{U_{relay}}$] ADC

Graphic depiction of [1380 x U_{relay}^{-2} x $1.0085^{U_{relay}}$]:

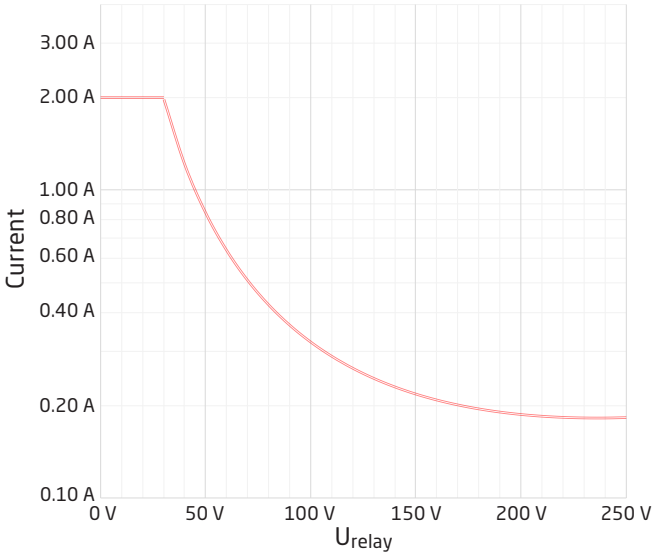

Observed authority requirements

EMC	2014/30/EU & UK SI 2016/1091
LVD	2014/35/EU & UK SI 2016/1101
RoHS	2011/65/EU & UK SI 2012/3032
EAC	TR-CU 020/2011

Approvals:

c UL us, UL 508	E231911
FM	3025177
DNV-GL	TAA0000101
EU RO Mutual Recognition Type Approval	MRA000000Z

Functional Safety:

Hardware assessed for use in SIL applications
FMEDA report - www.prelectronics.com

Visualisation in the PR 4500 of sensor error detection and input signal outside range

Sensor error check:		
Device	Configuration	Sensor error detection:
4116	R1, ERR.ACT=NONE - R2, ERR.ACT=NONE, OUT.ERR=NONE.	OFF
	Else:	ON

Outside range readout (IN.LO, IN.HI): If the valid range of the A/D converter or the polynomial is exceeded			
Input	Range	Readout	Limit
VOLT	0...1 V / 0.2...1 V	IN.LO	< -25 mV
		IN.HI	> 1.2 V
	0...10 V / 2...10 V	IN.LO	< -25 mV
		IN.HI	> 12 V
CURR	0...20 mA / 4...20 mA	IN.LO	< -1.05 mA
		IN.HI	> 25.05 mA
LIN.R	0...800 Ω	IN.LO	< 0 Ω
		IN.HI	> 1075 Ω
	0...10 kΩ	IN.LO	< 0 Ω
		IN.HI	< 110 kΩ
POTM	-	IN.LO	< -0.5 %
		IN.HI	> 100.5 %
TEMP	TC / RTD	IN.LO	< temperature range -2°C
		IN.HI	> temperature range +2°C

Display readout below min. / above max. (-1999, 9999):			
Input	Range	Readout	Limit
All	All	-1999	Display readout <-1999
		9999	Display readout >9999

Sensor error detection limits

Sensor error detection (SE.BR, SE.SH):			
Input	Range	Readout	Limit
CURR	Loop break (4..20 mA)	SE.BR	<= 3.6 mA; > = 21 mA
POTM	All, SE.BR on all 3-wire	SE.BR	> ca. 126 kΩ
LIN.R	0...800 Ω	SE.BR	> ca. 875 Ω
	0...10 kΩ	SE.BR	> ca. 11 kΩ
TEMP	TC	SE.BR	> ca. 750 kΩ / (1.25 V)
	RTD, 2-, 3-, and 4-wire No SE.SH for Cuxx, Pt10, Pt20 and Pt50	SE.BR	> ca. 15 kΩ
		SE.SH	< ca. 15 Ω

Error indications

Readout at hardware error		
Error search	Readout	Cause
Test of internal CJC sensor	CJ.ER	CJC sensor defect or temperature outside range
Checksum test of the configuration in FLASH	FL.CO	Error in FLASH
Check measurement of analog output current	AO.ER	1) No load on the current output (only S4...20 / S20...4 mA)
Communications test PR 4500 / 4116	NO.CO	Connection error
Check that input signal matches input configuration	IN.ER	1) Error levels on input
Check that saved configuration in PR 4500 matches device	TY.ER	Configuration is not 4116

!	All error indications in the display flash once per second. The help text explains the error. If the error is a sensor error, the display backlight flashes as well - this is acknowledged (stopped) by pushing the OK button.
1)	The error is reset by switching off and then switching on the supply voltage to the device.

Connections

Supply

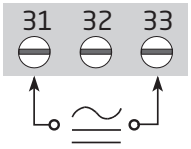

Inputs:

RTD, 2-wire

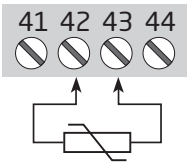

RTD, 3- / 4-wire

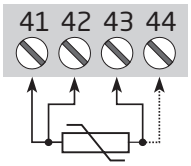

TC, internal CJC sensor

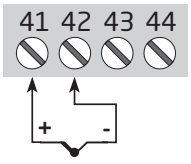

Resistance, 2-wire

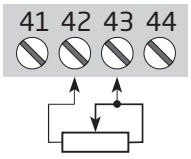

Resistance, 3- / 4-wire

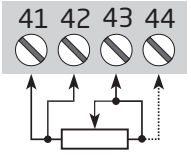

Potentiometer

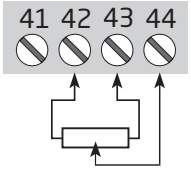

2-wire transmitter

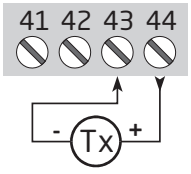

Current

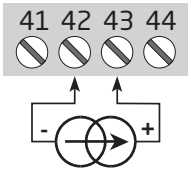

Voltage

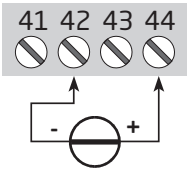

*TC, CJC connector

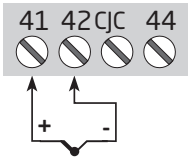

* Order separately:
CJC connector 5910

Outputs:

Current

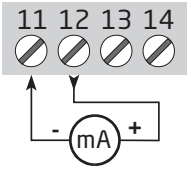

Voltage, 1 V

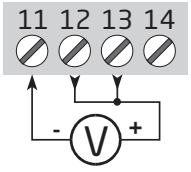

Voltage, 10 V

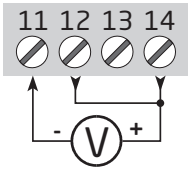

Relays

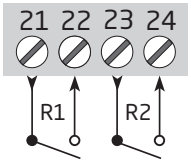

Block diagram

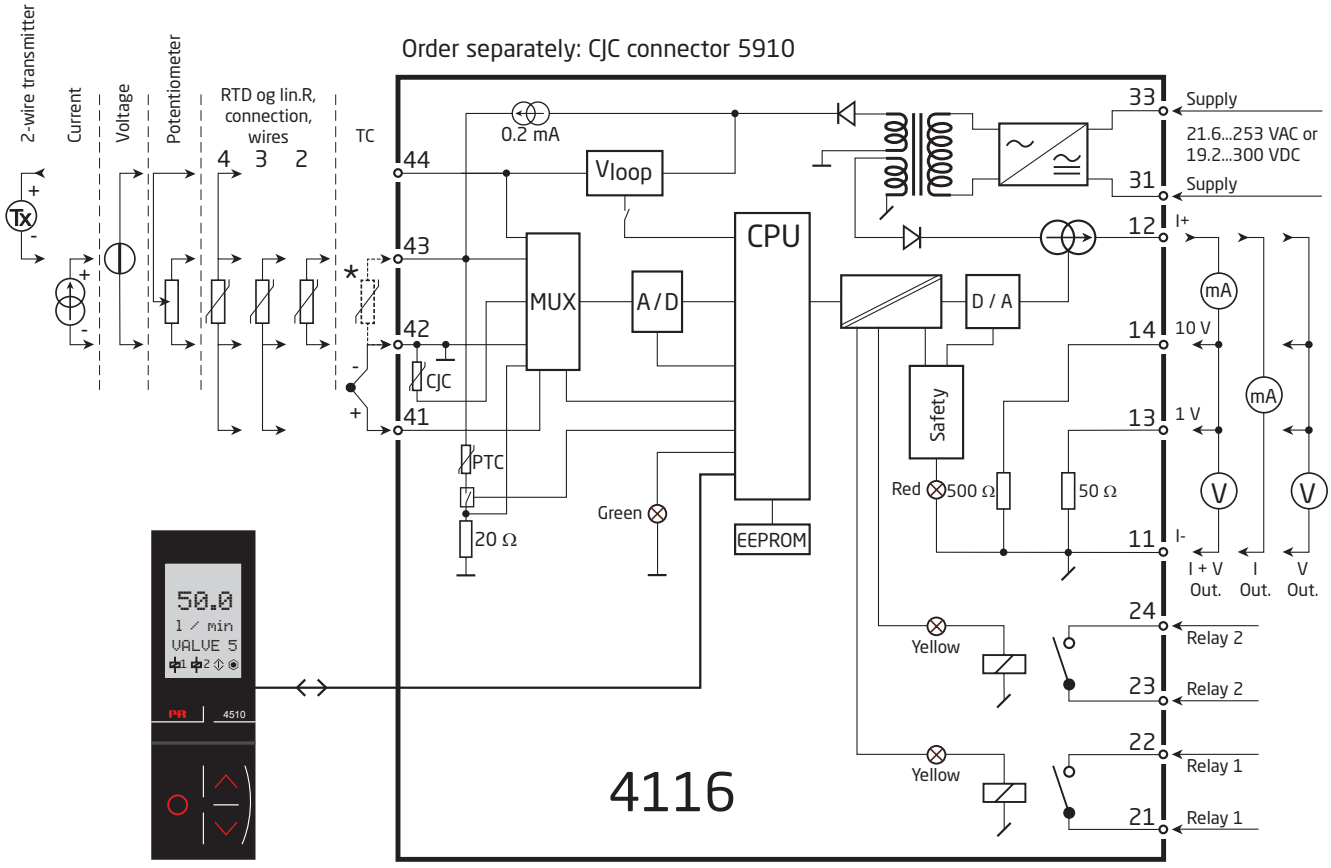

Configuration / operating the function keys

Documentation for routing diagram.

In general

When configuring the 4116, you will be guided through all parameters and you can choose the settings which fit the application. For each menu there is a scrolling help text which is automatically shown in line 3 on the display.

Configuration is carried out by use of the 3 function keys:

- ⌃ will increase the numerical value or choose the next parameter
- ⌄ will decrease the numerical value or choose the previous parameter
- OK will save the chosen value and proceed to the next menu

When configuration is completed, the display will return to the default state 1.0. Pressing and holding OK will return to the previous menu or return to the default state (1.0) without saving the changed values or parameters.

If no key is activated for 1 minute, the display will return to the default state (1.0) without saving the changed values or parameters.

Further explanations

Fast setpoint adjustment and relay test: These menus allow you to make a quick setpoint change and relay test when the FastSet menu is activated. This function can only be activated when the relays are set for setpoint function and are controlled by a setpoint.
Pressing ⌃ and ⌄ simultaneously will activate a relay test and change the state of the relay.
Pressing OK will save the setpoint change.
Holding down OK for more than 1 second will return the unit to the default state without saving the setpoint change.

Password protection: Programming access can be blocked by assigning a password. The password is saved in the device in order to ensure a high degree of protection against unauthorized modifications to the configuration.
If the configured password is not known, please contact PR electronics support - www.prelectronics.com/contact.

Signal and sensor error info via display front PR 4500

Sensor error (see limits in the table) is displayed as SE.BR (sensor break) or SE.SH (sensor short). Signals outside the selected range (not sensor error, see table for limits) are displayed as IN.LO indicating low input signal or IN.HI indicating high input signal. The error indication is displayed in line 3 as text and at the same time the backlight flashes. Line 4 of the display is a status line which displays status of relay 1 and relay 2, COM (flashing bullet) indicating correct functioning of PR 4500 and arrow up/down which indicates tendency readout of the input signal. If the figure 1 or figure 2 flashes, the unit has detected that the setpoint has been exceeded and that the relay is in "delay" mode. When the delay time has passed and the relay makes / breakes, the relay sign either displays or disappears.

Signal and sensor error indication without display front

Status of the unit can also be read from the red / green LED in the front of the device.

Green flashing LED 13 Hz indicates normal operation.
Green flashing LED 1 Hz indicates sensor error.
Steady red LED indicates internal error.

Relay functions

6 different settings of relay function can be selected.

Setpoint:	The unit works as a single limit switch
Window:	The relay has a window that is defined by a low and a high setpoint. On both sides of the window the relay has the same status.
Error function:	The relay is activated by sensor error.
Power:	The relay is activated as long as the power is on.
Off:	The relay is deactivated.
Latch:	The relay is latched. Only valid for setpoint and window function.

Increasing/decreasing: The relays can be set to activate at increasing or decreasing input signal.

Delay: An ON and an OFF delay can be set on both relays in the range 0...3600 s.

Hysteresis: 0.0...100.0%.

Latch

When the setpoint is exceeded the relay outputs enters an alarm state. The latch function of the 4116 will hold the relays in this state until the function is deactivated manually. The latch function can be applied when the relay function setpoint or window is selected.

The latch function can be selected separately for each relay output. If the configuration is copied from one device to another by way of the PR 4500, the latch function must be reconfigured.

The latch function activates and holds the relays when the input signal rises above or falls below the selected setpoints and the relay action has been selected as increasing or decreasing.

The window function is selected by choosing "window" in the menu and defining a high and a low setpoint.
It can be selected for each relay contact whether the contact is open or closed inside the window. This selection is made in the menu R1.cont and R2.cont.

The setpoint function is selected by choosing "setpoint" in the menu and entering the desired limit. The device then works as a single limit switch.

An activated relay means that the contact is closed if the contact function "normally open" is selected, and the contact is open if the contact function "normally closed" is selected.

The delay time for activation and deactivation can be set independently of each other in the menus ON.DEL and OFF DEL respectively.

If the relay function "Error" is active, the relay will latch when a sensor error occurs and will not be deactivated automatically when the sensor error is rectified.

The relay can only be deactivated by an operator and only when the normal conditions for deactivation are met. If the input signal still has a value that will activate the relay, the relay will latch again.

See the graphic depiction of the setpoint and window functions on pages 30 and 31.

Manual deactivation of the latch function

If the relay outputs are activated and thereby latched, it will be indicated in the display. The backlight flashes and the scrolling help text tells you how to deactivate the output. Manual deactivation is carried out by way of the front buttons on the 45x. Use ⌃ and ⌄ to navigate in the menu and OK to validate your selection. If the password protection has been activated, the password must be entered in order to access the deactivation menu. See the menu structure on page 27.

Advanced functions

The unit gives access to a number of advanced functions which can be reached by answering "Yes" to the point "ADV.SET".

Memory (MEM): In the memory menu you can save the configuration of the device in the PR 4500, and then move the PR 4500 onto another device of the same type and download the configuration in the new device.

Display setup (DISP): Here you can adjust the brightness contrast and the backlight. Setup of TAG numbers with 6 alphanumerics. Selection of functional readout in line 3 of the display - choose between readout of analog output or tag no.

Two-point process calibration (CAL): The device can be process-calibrated in 2 points to fit a given input signal . A low input signal (not necessarily 0%) is applied and the actual value is entered via PR 4500. Then a high signal (not necessarily 100%) is applied and the actual value is entered via PR 4500. If you accept to use the calibration, the device will work according to this new adjustment. If you later reject this menu point or choose another type of input signal the device will return to factory calibration.

Process simulation function (SIM): In the menu point "EN.SIM" it is possible to simulate an input signal by means of the arrow keys and thus control the output signal up or down. You must exit the menu by pressing OK (no time-out).
The following point allows you to activate relay 1 and relay 2 by means of the arrow-keys up/down. You must exit the menu by pressing OK (no time-out).
The simulation function exits automatically, if the PR 4500 is detached.

Note: When EN.SIM is utilised as per FMEDA "proof test procedure" then any PR 4500 communication enabler can be used and not only the 4501 device referenced in the instructions.

Password (PASS): Here you can choose a password between 0000 and 9999 in order to protect the unit against unauthorized modifications to the configuration. The unit is delivered default without password.

Language (LANG): In the menu "LANG" you can choose between 7 different language versions of help texts that will appear in the menu. You can choose between UK, DE, FR, IT, ES, SE and DK.

Auto diagnosis

The device performs an advanced auto diagnosis of the internal circuits.
The following possible errors can by displayed in the front unit PR 4500.

- CJ.ER - CJC sensor defect or CJC temperature outside range
- FL.ER - Flash error
- AO.ER - No load on the current output (only for S4...20 mA / S20...4 mA)
- NO.CO - Connection error
- IN.ER - Error levels on input
- TY.ER - Configuration in PR 4500 does not match this product type

Selection of units

After choosing the input signal type you can choose which process units should be displayed in text line 2 (see table). By selection of temperature input the process value is always displayed in Celsius or Fahrenheit. This is selected in the menu point after selection of temperature input.

Safety readback & SIL operation

When the device is delivered with default configuration, the SIL function is disabled. The safety readback function (loop surveillance) can be selected in the menu O.RANGE, thus enabling the device to run in SIL mode.
In order to enable the SIL functionality, the menu item S4...20 mA or S20....4 mA MUST be selected.
All other assumptions and restrictions contained in the FMEDA report must also be observed.
Please note, however, that when safety readback is enabled, a sensor error will be indicated as an error on the analog output signal.

CJC

In the CJC menu you can choose between CJC connector and internal cold junction compensation. The CJC connecter (PR 5910) must be ordered separately.

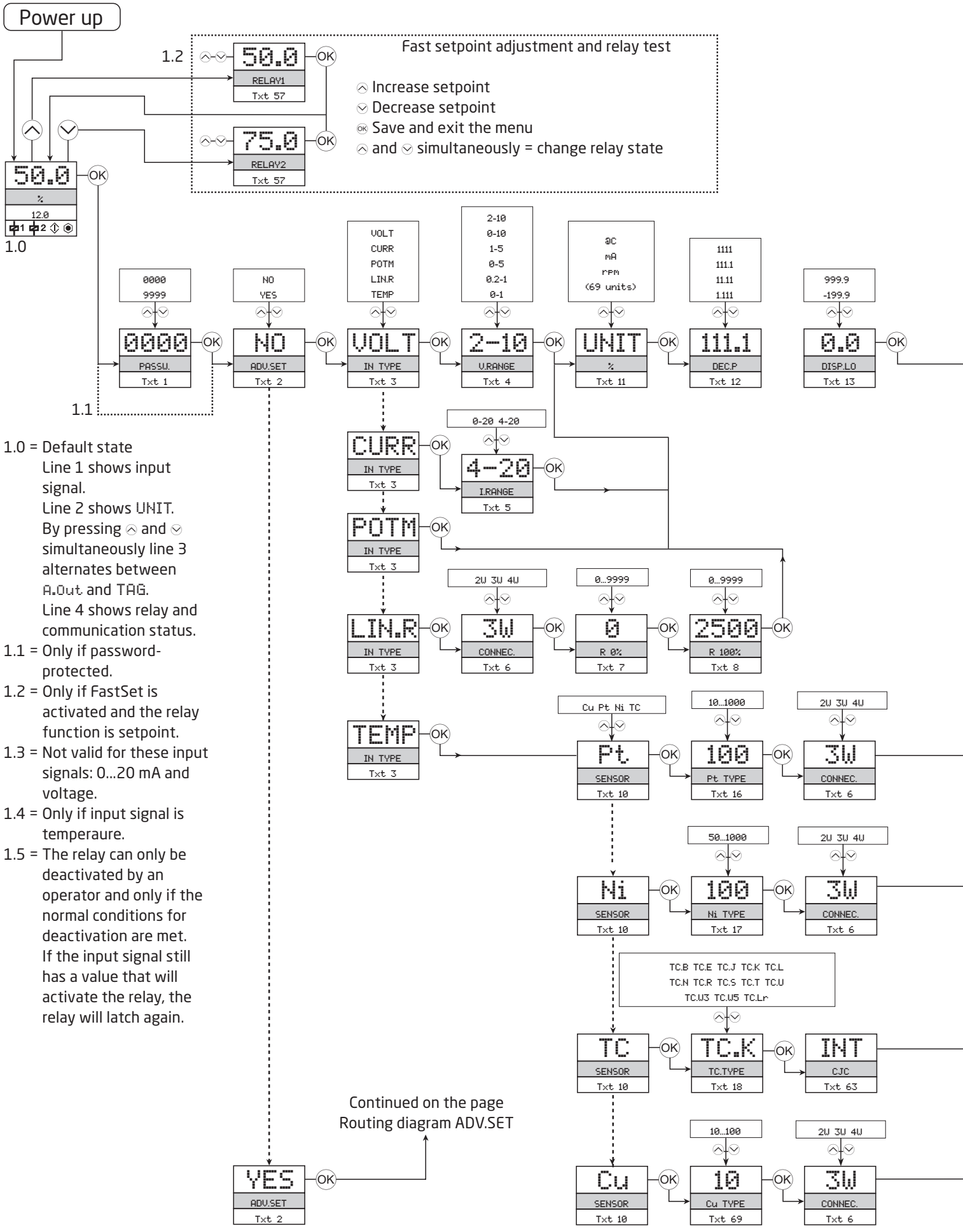

1.0 = Default state
Line 1 shows input signal.
Line 2 shows UNIT.
By pressing ⌃ and ⌄ simultaneously line 3 alternates between A.Out and TAG.
Line 4 shows relay and communication status.

1.1 = Only if password-protected.

1.2 = Only if FastSet is activated and the relay function is setpoint.

1.3 = Not valid for these input signals: 0...20 mA and voltage.

1.4 = Only if input signal is temperaure.

1.5 = The relay can only be deactivated by an operator and only if the normal conditions for deactivation are met. If the input signal still has a value that will activate the relay, the relay will latch again.

Routing diagram

If no key is activated for 1 minute, the display will return to the default state 1.0 without saving configuration changes.

⌃ Increase value / choose next parameter

⌄ Decrease value / choose previous parameter

OK Save the chosen value and proceed to the next menu

Hold OK Back to previous menu / return to menu 1.0 without saving.

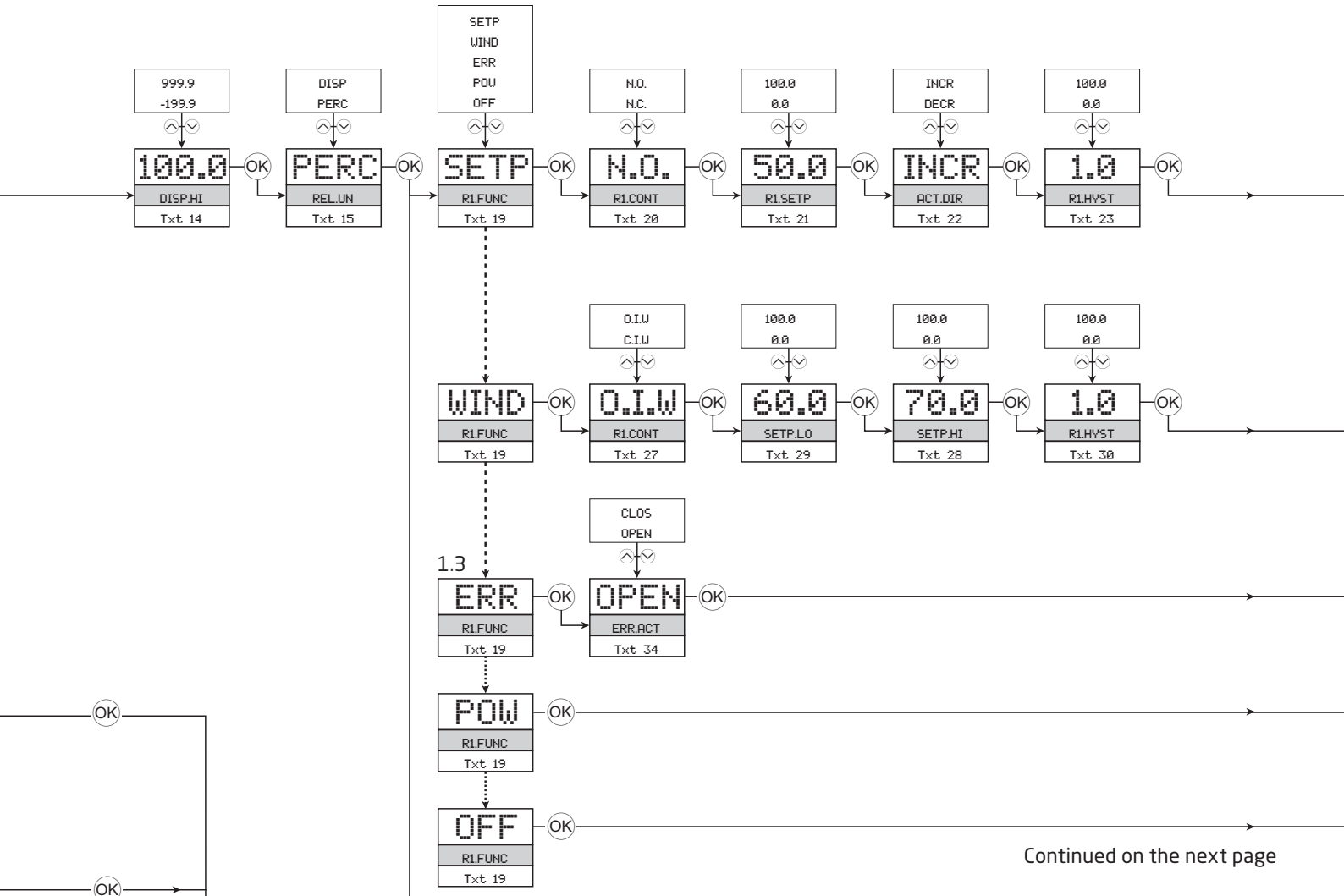

Continued on the next page

Selectable UNITS:

°C	hP	kV	mA	pH
°F	hPa	kVh	mbar	rpm
%	Hz	l	mils	s
A	in	l/h	min	S
bar	in/h	l/min	mm	t
cm	in/min	l/s	mm/s	t/h
ft	in/s	m	mol	uA
ft/h	ips	m/h	MPa	um
ft/min	K	m/min	mV	uS
ft/s	kA	m/s	MV	V
g	kg	m/s2	MVh	V
gal/h	kJ	m3	N	Vh
gal/min	kPa	m3/h	Ohm	yd
GV	kV	m3/min	Pa	[blank]

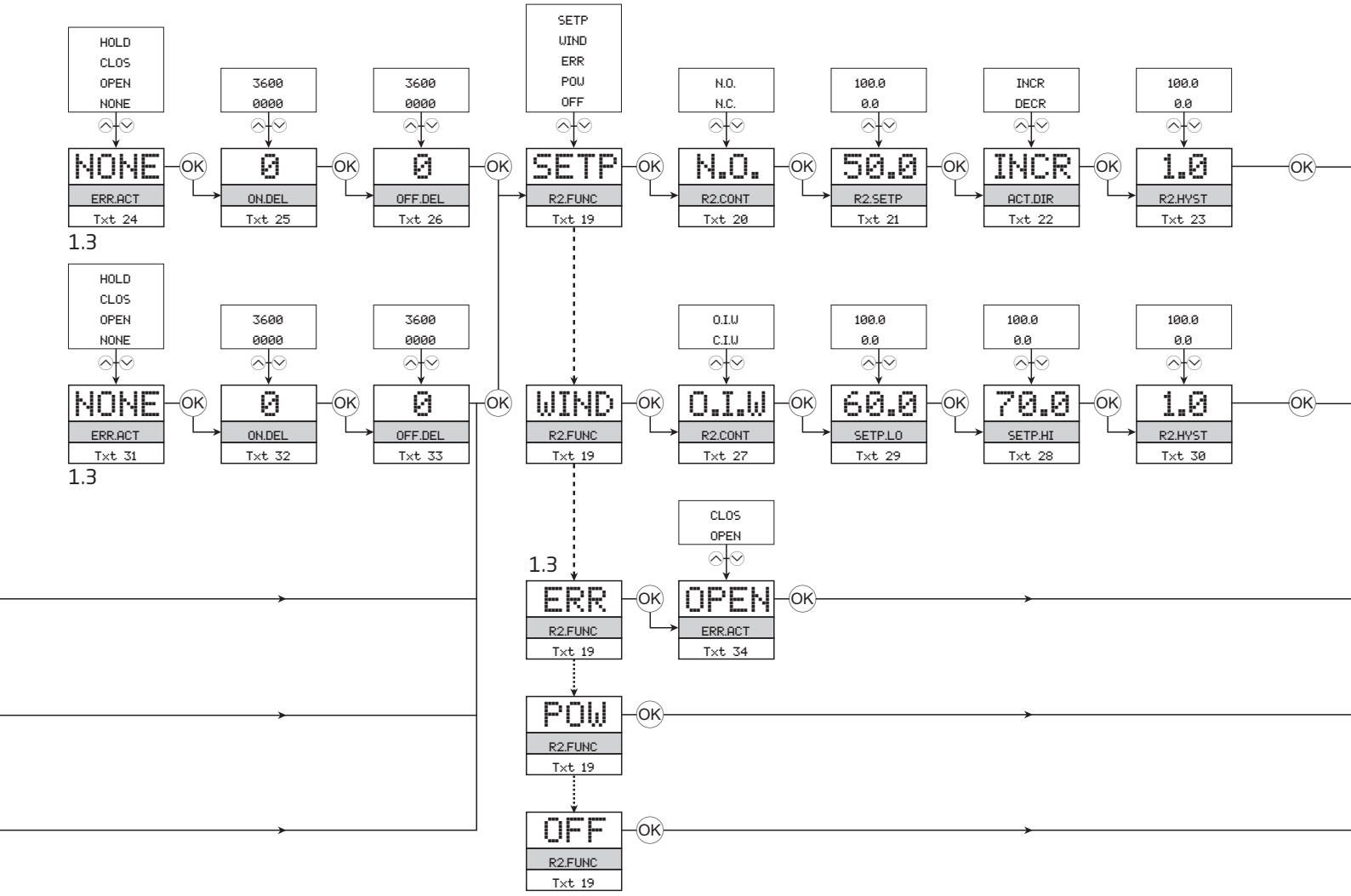
HOLD
CLOS
OPEN
NONE
NONE
ERR.ACT
Txt 24
3600
0000
0
ON.DEL
Txt 25
3600
0000
0
OFF.DEL
Txt 26
SETP
WIND
ERR
POW
OFF
SETP
R2.FUNC
Txt 19
N.O.
N.C.
N.O.
R2.CONT
Txt 20
100.0
0.0
50.0
R2.SETP
Txt 21
INCR
DECR
INCR
ACT.DIR
Txt 22
100.0
0.0
1.0
R2.HYST
Txt 23
OK
1.3
HOLD
CLOS
OPEN
NONE
NONE
ERR.ACT
Txt 31
3600
0000
0
ON.DEL
Txt 32
3600
0000
0
OFF.DEL
Txt 33
O.I.W
C.I.W
WIND
R2.FUNC
Txt 19
O.I.W
R2.CONT
Txt 27
100.0
0.0
60.0
SETP.LO
Txt 29
100.0
0.0
70.0
SETP.HI
Txt 28
100.0
0.0
1.0
R2.HYST
Txt 30
1.3
CLOS
OPEN
ERR
R2.FUNC
Txt 19
OPEN
ERR.ACT
Txt 34
POW
R2.FUNC
Txt 19
OFF
R2.FUNC
Txt 19

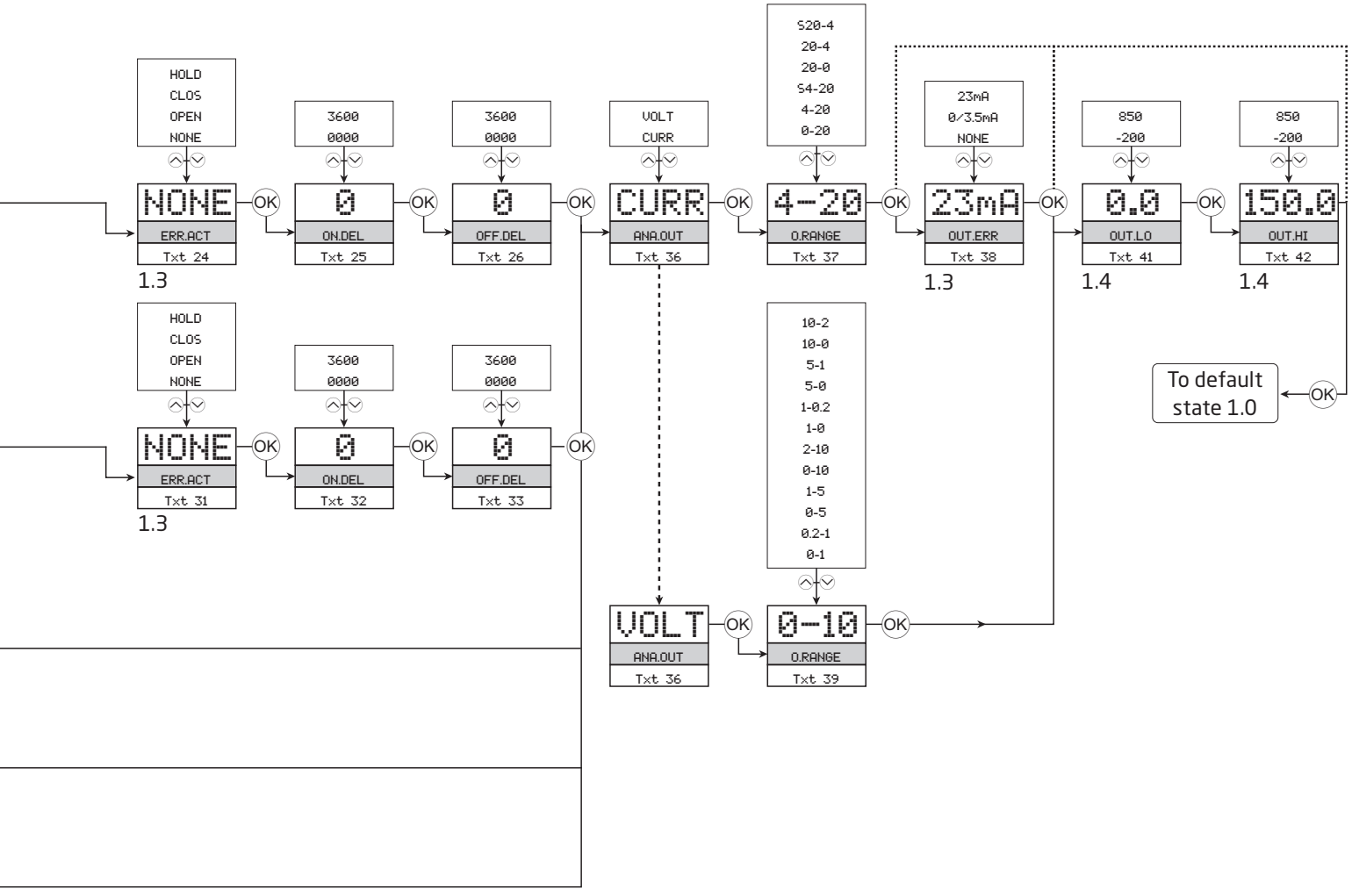
HOLD
CLOS
OPEN
NONE
NONE
ERR.ACT
Txt 24
1.3
3600
0000
0
ON.DEL
Txt 25
3600
0000
0
OFF.DEL
Txt 26
VOLT
CURR
CURR
ANA.OUT
Txt 36
S20-4
20-4
20-0
S4-20
4-20
0-20
4-20
O.RANGE
Txt 37
23mA
0/3.5mA
NONE
23mA
OUT.ERR
Txt 38
1.3
850
-200
0.0
OUT.LO
Txt 41
1.4
850
-200
150.0
OUT.HI
Txt 42
1.4
To default
state 1.0
OK
HOLD
CLOS
OPEN
NONE
NONE
ERR.ACT
Txt 31
1.3
3600
0000
0
ON.DEL
Txt 32
3600
0000
0
OFF.DEL
Txt 33
10-2
10-0
5-1
5-0
1-0.2
1-0
2-10
0-10
1-5
0-5
0.2-1
0-1
VOLT
ANA.OUT
Txt 36
0-10
O.RANGE
Txt 39

Routing diagram, advanced settings (ADV.SET)

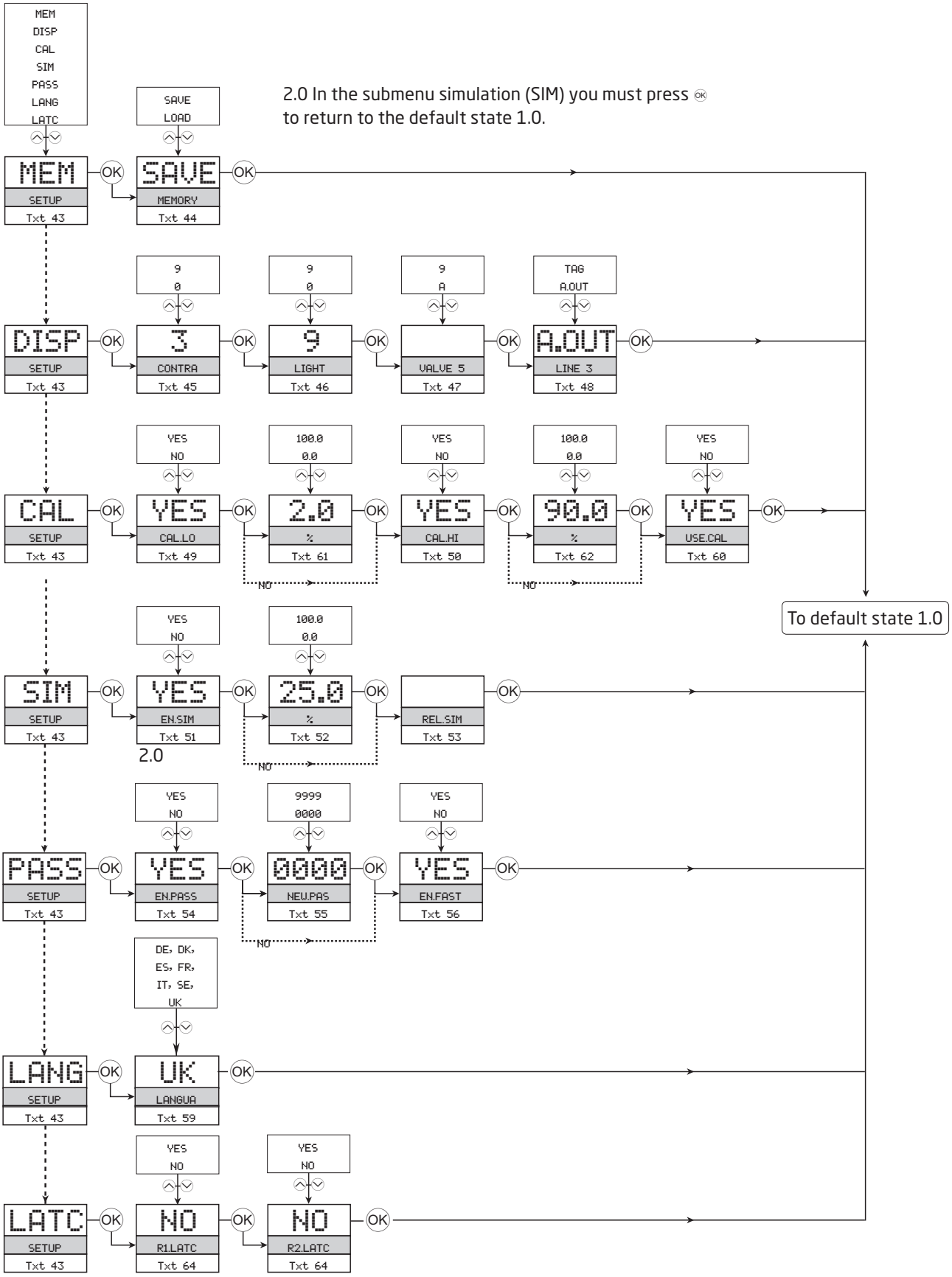

Routing diagram,
manual deactivation of the latch function

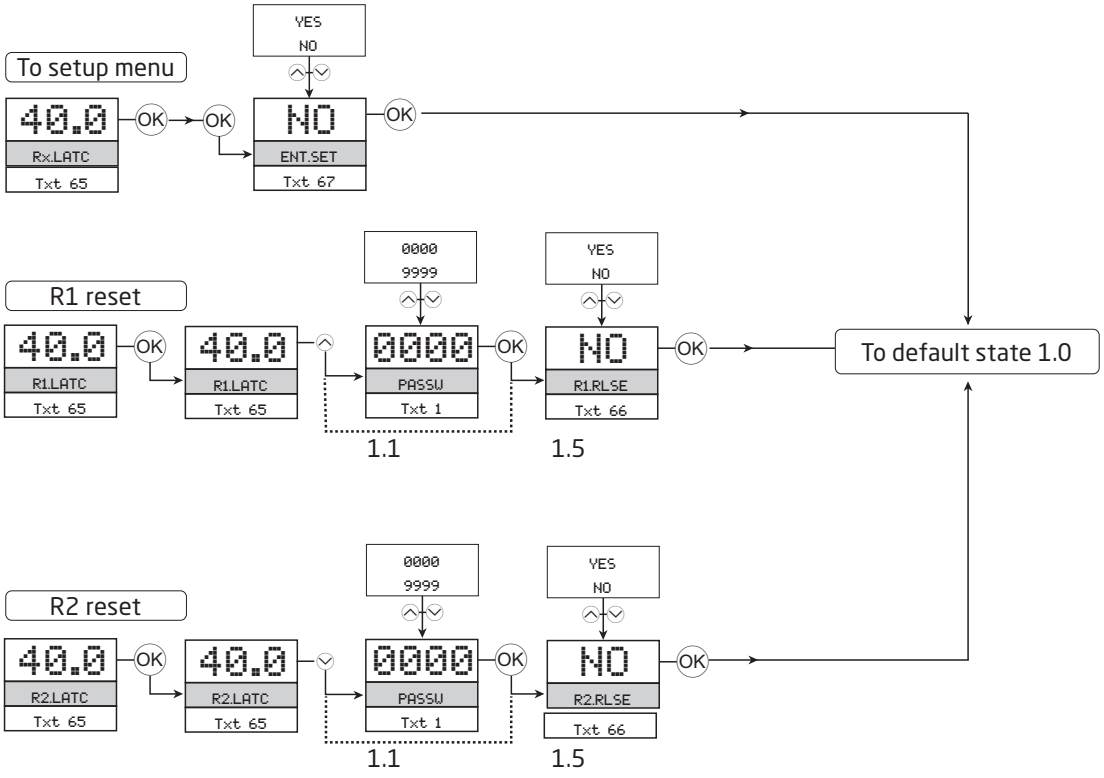

Help text overview

[01] Set correct password
[02] Enter advanced setup menu?
[03] Select temperature input
Select potentiometer input
Select linear resistance input
Select current input
Select voltage input
[04] Select 0.0-1 V input range
Select 0.2-1 V input range
Select 0-5 V input range
Select 1-5 V input range
Select 0-10 V input range
Select 2-10 V input range
[05] Select 0-20 mA input range
Select 4-20 mA input range
[06] Select 2-wire sensor connection
Select 3-wire sensor connection
Select 4-wire sensor connection
[07] Set resistance value low
[08] Set resistance value high
[09] Select Celsius as temperature unit
Select Fahrenheit as temperature unit
[10] Select TC sensor type
Select Ni sensor type
Select Pt sensor type
Select Cu sensor type
[11] Select display unit
[12] Select decimal point position
[13] Set display range low
[14] Set display range high
[15] Set relays in % of input range
Set relays in display units
[16] Select Pt10 as sensor type
Select Pt20 as sensor type
Select Pt50 as sensor type
Select Pt100 as sensor type
Select Pt200 as sensor type
Select Pt250 as sensor type
Select Pt300 as sensor type
Select Pt400 as sensor type
Select Pt500 as sensor type
Select Pt1000 as sensor type
[17] Select Ni50 as sensor type
Select Ni100 as sensor type
Select Ni120 as sensor type
Select Ni1000 as sensor type
[69] Select Cu10 as sensor type
Select Cu20 as sensor type
Select Cu50 as sensor type
Select Cu100 as sensor type
[18] Select TC-B as sensor type
Select TC-E as sensor type
Select TC-J as sensor type
Select TC-K as sensor type
Select TC-L as sensor type
Select TC-N as sensor type
Select TC-R as sensor type
Select TC-S as sensor type
Select TC-T as sensor type
Select TC-U as sensor type
Select TC-W3 as sensor type
Select TC-W5 as sensor type
Select TC-Lr as sensor type
[19] Select OFF function - relay is permanently off
Select POWER function - relay indicates power status OK
Select ERROR function - relay indicates sensor error only
Select WINDOW function - relay controlled by 2 setpoints
Select SETPOINT function - relay controlled by 1 setpoint
[20] Select Normally Closed contact
Select Normally Open contact
[21] Set relay setpoint
[22] Activate relay on decreasing signal
Activate relay on increasing signal
[23] Set relay hysteresis
[24] No error action - undefined status at error
Open relay contact at error
Close relay contact at error
Hold relay status at error
[25] Set relay ON delay in seconds
[26] Set relay OFF delay in seconds
[27] Relay contact is Closed Inside Window
Relay contact is Open Inside Window
[28] Set relay window setpoint high
[29] Set relay window setpoint low
[30] Set relay window hysteresis
[31] No error action - undefined status at error
Open relay contact at error
Close relay contact at error
Hold relay status at error
[32] Set relay ON delay in seconds
[33] Set relay OFF delay in seconds
[34] Open relay contact at error
Close relay contact at error
[36] Select current as analog output type
Select voltage as analog output type
[37] Select 0-20 mA output range
Select 4-20 mA output range
Select S4-20 mA with safety readback
Select 20-0 mA output range
Select 20-4 mA output range
Select S20-4 mA with safety readback
[38] Select no error action - output undefined at error
Select downscale at error
Select NAMUR NE43 downscale at error
Select NAMUR NE43 upscale at error
[39] Select 0.0-1 V output range
Select 0.2-1 V output range
Select 0-5 V output range
Select 1-5 V output range
Select 0-10 V output range
Select 2-10 V output range
Select 1-0.0 V output range

Select 1-0.2 V output range
Select 5-0 V output range
Select 5-1 V output range
Select 10-0 V output range
Select 10-2 V output range

[41] Set temperature for analog output low

[42] Set temperature for analog output high

[43] Enter password setup
Enter simulation mode
Perform process calibration
Enter display setup
Perform memory operations
Enter relay latch setup

[44] Load saved configuration into 4116
Save 4116 configuration in PR 4500

[45] Adjust LCD contrast

[46] Adjust LCD backlight

[47] Write a 6-character device TAG

[48] Analog output value is shown in display line 3
Device TAG is shown in display line 3

[49] Calibrate input low to process value?

[50] Calibrate input high to process value?

[51] Enable simulation mode?

[52] Set the input simulation value

[53] Relay simulation - use ⌃ and ⌄ to toggle relay 1 and 2

[54] Enable password protection?

[55] Set new password

[56] Enable Fastset functionality?

[57] Relay setpoint - press OK to save

[58] Relay setpoint - Read only

[59] Select language

[60] Use process calibration values?

[61] Set value for low calibration point

[62] Set value for high calibration point

[63] Select CJC connector (accessory)
Select internal temperature sensor

[64] Enable relay latch function?

[65] Relay is latched - press OK to acknowledge
Relay 1 is latched - press ⌃ to release
Relay 2 is latched - press ⌄ to release
Relays are latched - press ⌃ or ⌄ tor release relay 1 or relay 2

[66] Release relay? (if conditions allow)

[67] Enter setup menu? (latched relays may release!)

Graphic depiction of latch function setpoint

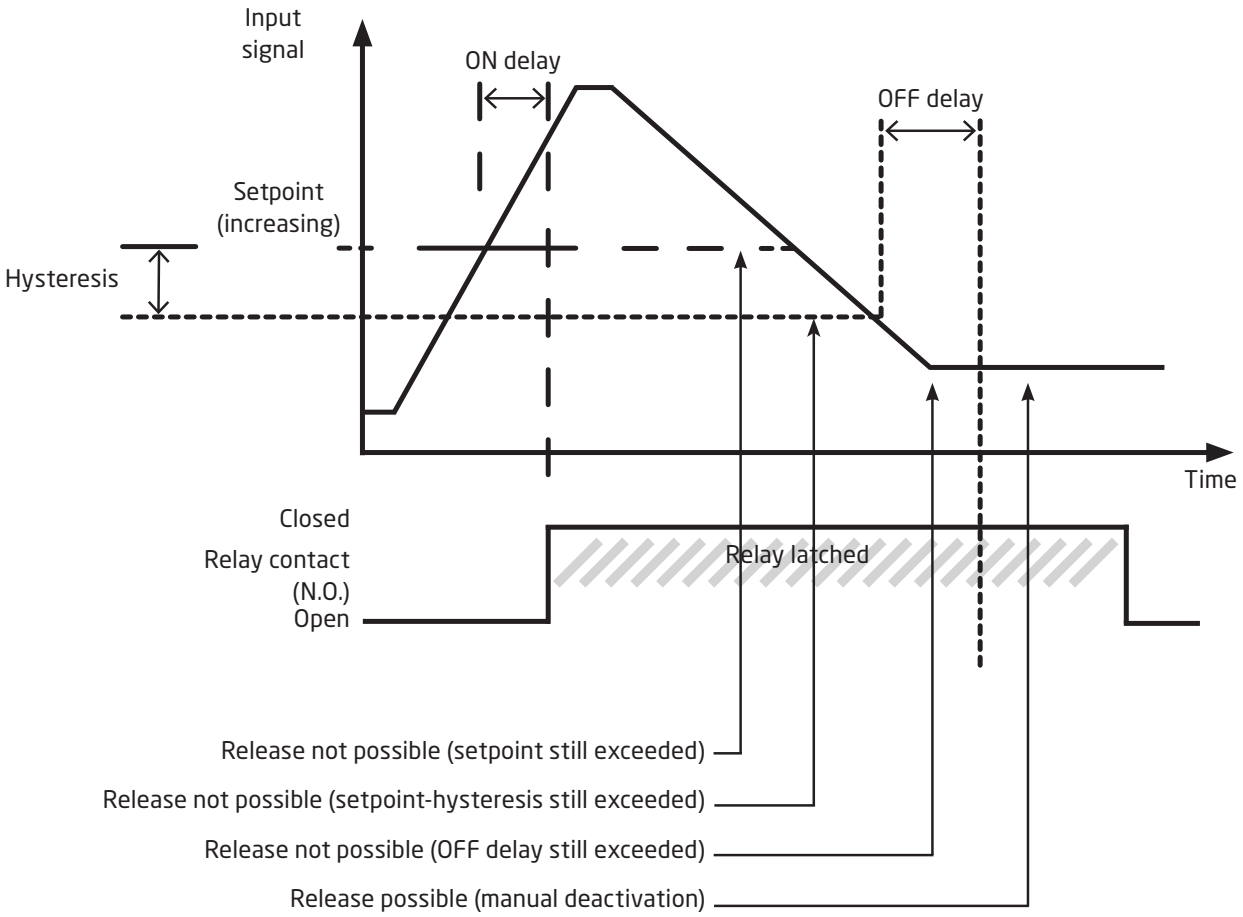

Graphic depiction of latch function window

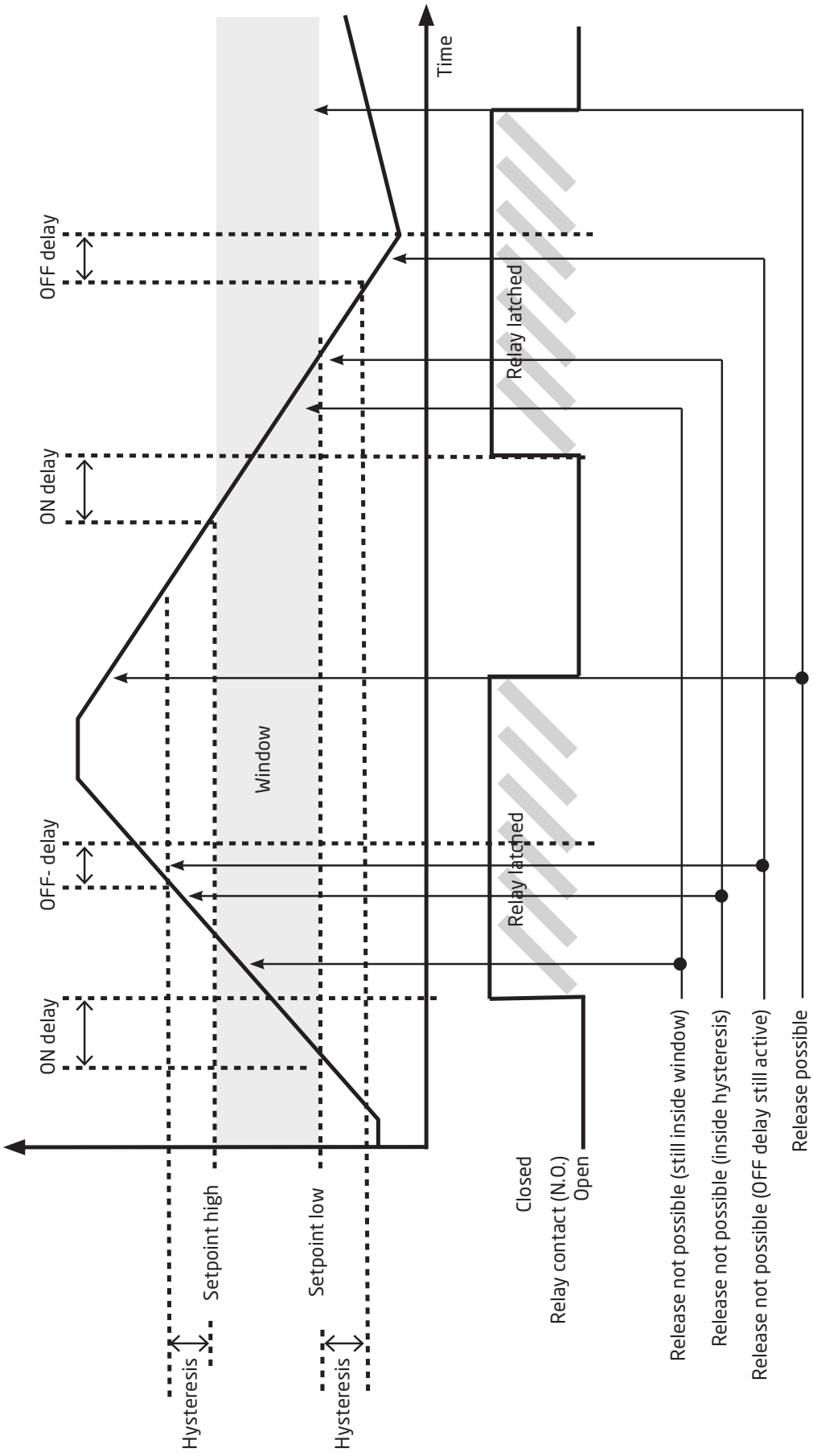

Graphic depiction of relay action setpoint

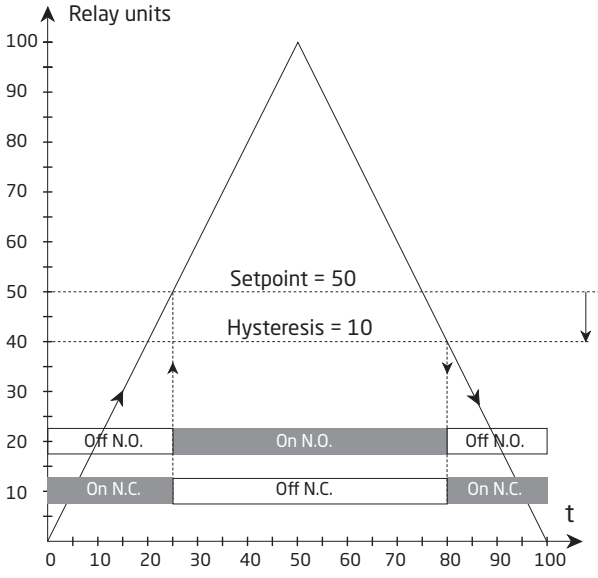

Relay action: Increasing

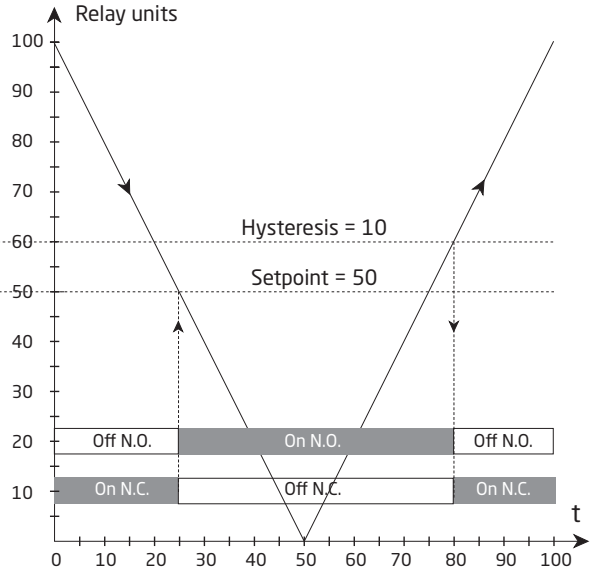

Relay action: Decreasing

Graphic depiction of relay action window

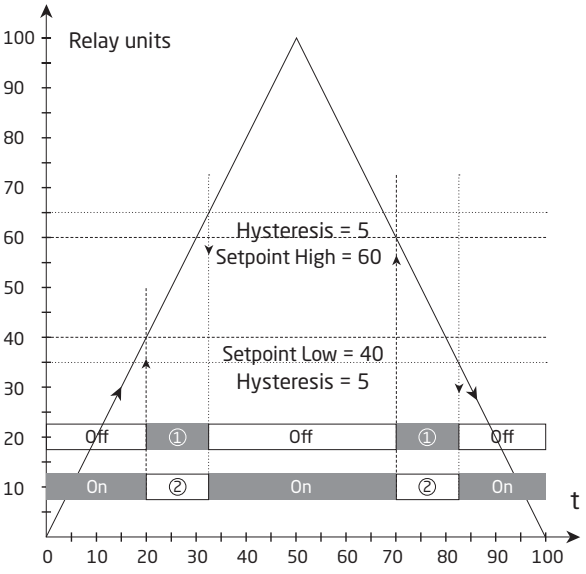

Relay function: Window (shown for increasing signal)
Contact: Closed inside window = ①
Contact: Open inside window = ②

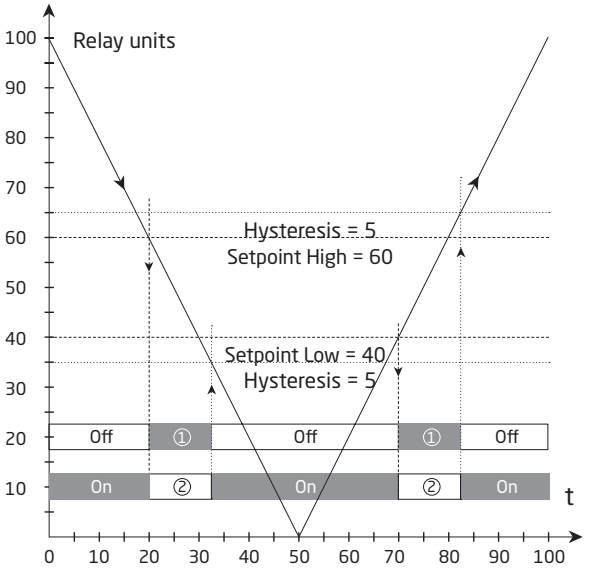

Relay function: Window (shown for decreasing signal)
Contact: Closed inside window = ①
Contact: Open inside window = ②

Document history

The following list provides notes concerning revisions of this document.

Rev. ID	Date	Notes
105	1948	Relay data updated, graph with resistive loads inserted. EU-RO marine approval added.
106	2136	UKCA added.

We are near you, *all over the world*

Our trusted red boxes are supported wherever you are

All our devices are backed by expert service and a 5-year warranty. With each product you purchase, you receive personal technical support and guidance, day-to-day delivery, repair without charge within the warranty period and easily accessible documentation.

We are headquartered in Denmark, and have offices and authorized partners the world over. We are a local business with a global reach. This means that we are always nearby and know your local markets well. We are committed to your satisfaction and provide PERFORMANCE MADE SMARTER all around the world.

For more information on our warranty program, or to meet with a sales representative in your region, visit prelectronics.com.

Benefit today from
PERFORMANCE MADE SMARTER

PR electronics is the leading technology company specialized in making industrial process control safer, more reliable and more efficient. Since 1974, we have been dedicated to perfecting our core competence of innovating high precision technology with low power consumption. This dedication continues to set new standards for products communicating, monitoring and connecting our customers' process measurement points to their process control systems.

Our innovative, patented technologies are derived from our extensive R&D facilities and from having a great understanding of our customers' needs and processes. We are guided by principles of simplicity, focus, courage and excellence, enabling some of the world's greatest companies to achieve PERFORMANCE MADE SMARTER.