

Model Number

NBB20-U1-A0

Features

- **Sensor head bidirectional and rotatable**
- **20 mm flush**
- **4-wire DC**
- **4 LEDs indicator for 360° visibility**

Accessories

V1-M20-80
Receptacles, M12/M20; plastic version

MHW 01
Modular mounting bracket

MH 04-2681F
Mounting aid for VariKont, +U1+ and +U9*

Technical Data

General specifications			
Switching element function		NPN	NO/NC
Rated operating distance	s_n	20 mm	
Installation		flush	
Output polarity		DC	
Assured operating distance	s_a	0 ... 16.2 mm	
Reduction factor r_{Al}		0.33	
Reduction factor r_{Cu}		0.31	
Reduction factor r_{304}		0.74	
Reduction factor r_{Brass}		0.41	
Nominal ratings			
Operating voltage	U_B	10 ... 30 V DC	
Switching frequency	f	0 ... 150 Hz	
Hysteresis	H	typ. 5 %	
Reverse polarity protection		reverse polarity protected	
Short-circuit protection		pulsing	
Voltage drop	U_d	≤ 2 V	
Operating current	I_L	0 ... 200 mA	
Off-state current	I_r	0 ... 0.5 mA	
No-load supply current	I_0	≤ 20 mA	
Time delay before availability	t_v	80 ms	
Operating voltage indicator		LED, green	
Switching state indicator		LED, yellow	
Functional safety related parameters			
$MTTF_d$		1230 a	
Mission Time (T_M)		20 a	
Diagnostic Coverage (DC)		0 %	
Ambient conditions			
Ambient temperature		-25 ... 85 °C (-13 ... 185 °F)	
Mechanical specifications			
Connection type		screw terminals	
Core cross-section		≤ 2.5 mm²	
Housing material		PA/metal with epoxy powder coating	
Sensing face		PA	
Housing base		plastic	
Degree of protection		IP68 / IP69K	
Mass		225 g	
Note		Tightening torque: 1.8 Nm (housing) Tightening torque: 1.0 Nm (Screw terminal)	
Compliance with standards and directives			
Standard conformity			
Standards		EN 60947-5-2:2007 IEC 60947-5-2:2007	
Approvals and certificates			
UL approval		cULus Listed, General Purpose	
CSA approval		cCSAus Listed, General Purpose	
CCC approval		CCC approval / marking not required for products rated ≤36 V	

Dimensions

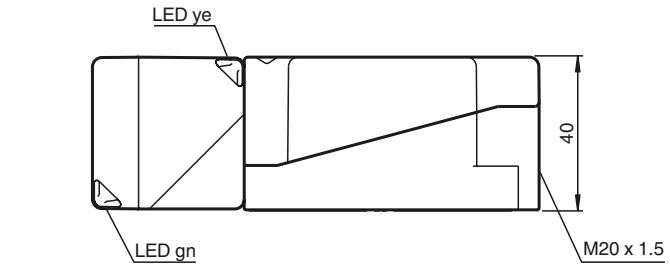

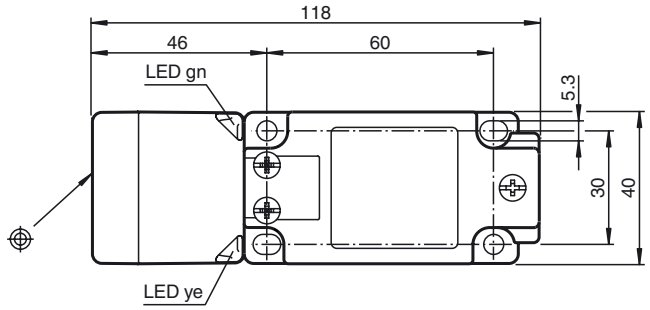

Release date: 2015-02-24 10:47 Date of issue: 2015-02-24 194783_eng.xml

Electrical Connection

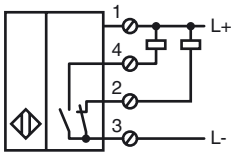

Release date: 2015-02-24 10:47 Date of issue: 2015-02-24 194783_eng.xml

Refer to “General Notes Relating to Pepperl+Fuchs Product Information”.
Pepperl+Fuchs Group www.pepperl-fuchs.com
USA: +1 330 486 0001 fa-info@us.pepperl-fuchs.com
Germany: +49 621 776 4411 fa-info@de.pepperl-fuchs.com
Singapore: +65 6779 9091 fa-info@sg.pepperl-fuchs.com
PEPPERL+FUCHS SENSING YOUR NEEDS