Extrusion

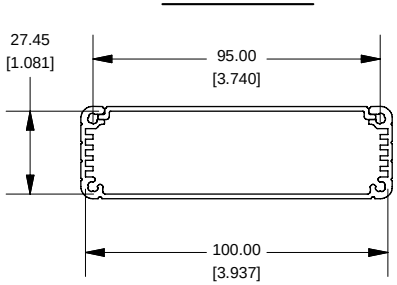

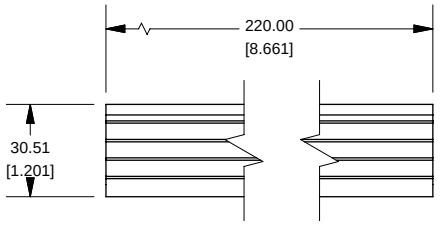

Slot Details

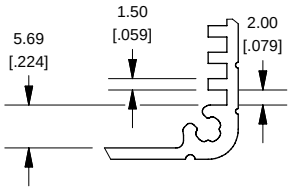

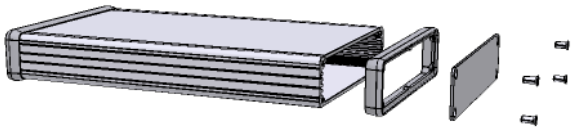

EXTRUSION DESIGNED FOR 100MM WIDE PC BOARD

End Plate

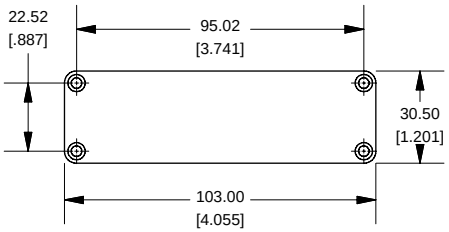

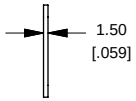

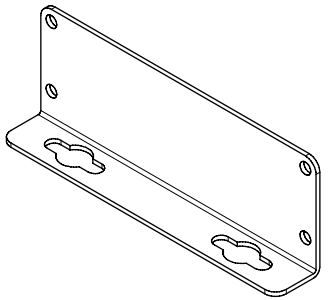

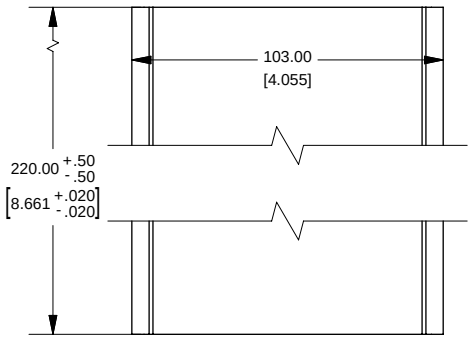

Open Bezel

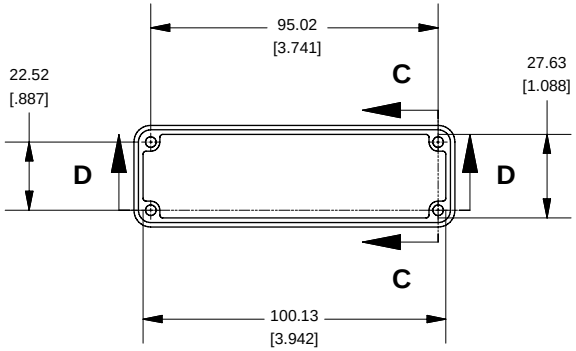

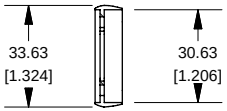

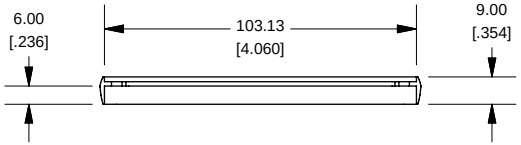

OPTIONAL FLANGE END PANELS 1455LF

NOTE
Purchased assembly includes box, plastic bezels, end panels, #6 Taptight screws and self adhesive rubber feet.
Box made from Extruded Aluminum 6063.
Bezels made with polycarbonate.

1455L2201	
PART NUMBERS	
Clear Anodized	1455L2201
Black Anodized	1455L2201BK
ACCESSORIES	
See website for accessories.	

Enclosures can be Factory Modified (Milling, Drilling, Printing etc.)
Solid models of this enclosure available in STEP or IGES.
Contact Factory mjm@hammondmfg.com

HAMMOND MANUFACTURING™

1455L2201

www.hammondmfg.com