EMV 1200

Single Hole Mounting 2-Wire Meter

EMV 1200 is an easy to mount LCD digital panel meter. The module features a 4 to 25V measurement range with 100mV resolution and is powered from the signal it is measuring. Only valid readings are displayed; the module indicates "LO" at voltages below 4V and "HI" at voltages above 25V. To install the meter, the user need only drill a single 5.5mm / $^{7}/_{32}$" hole in the panel. The module is fitted to the panel by locating its threaded stud through the hole, fitting the washer and tightening the nut provided. The module's connecting wires pass through the hollow stud into the target application for connection. A rubber seal is included, providing splashproof protection for the unit when fitted to the meter during installation.

- **Single Hole Mounting**
- **2-Wire Operation**
- **4 to 25V d.c. Full Scale Reading**
- **12.5mm / 0.5" LCD Digit Height**
- **Reverse Polarity Protection**
- **Splashproof**



Shown Actual Size

APPLICATION

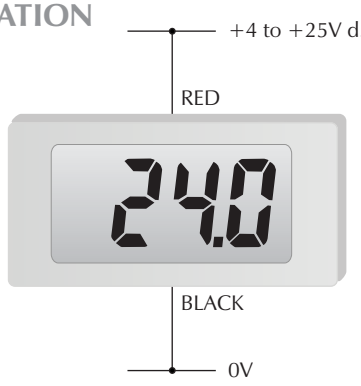

Easy Mounting Voltmeter				Stock Number EMV 1200
Specification	**Min.**	**Typ.**	**Max.**	**Unit**
Accuracy (overall error)		0.2		V (±1 count)
Linearity			±1	count
Valid displayed reading*	4.0		25.0	V d.c.
Resolution		100		mV d.c.
Sample rate		3		sample/sec
Operating temperature range	0		50	°C
Supply voltage	3		50	V d.c.
Supply current			3	mA

* At voltages below 4.0V d.c., the LCD will display LO and will ultimately go blank.
At Voltages in excess of 25.0V d.c., the LCD will display HI.
Do NOT exceed 50V d.c., as this may damage the meter.
The module includes reverse polarity protection up to 30V for up to 30 seconds.
Operation and accuracy at voltages above 25.0V or below 4.0V are not specified.

SAFETY

To comply with the Low Voltage Directive (LVD 93/68/EEC), input voltages to the module's wires must not exceed 60Vd.c. The user must ensure that the incorporation of the meter into the user's equipment conforms to the relevant sections of BS EN 61010 (Safety Requirements for Electrical Equipment for Measuring, Control and Laboratory Use).

DIMENSIONS All dimensions in mm (inches)

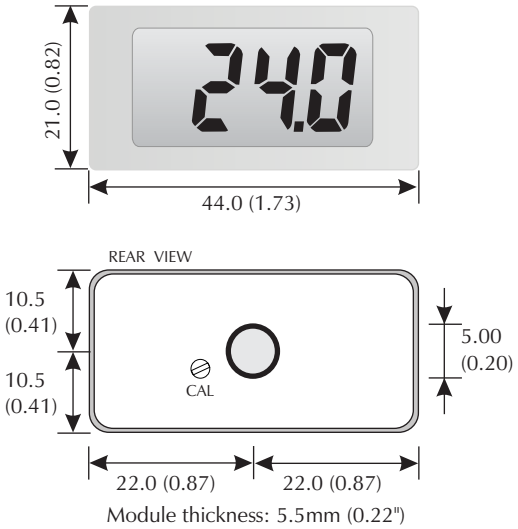

Module thickness: 5.5mm (0.22")



Reading when Vin < 4V, before display switches off.



Reading when Vin > 25V.

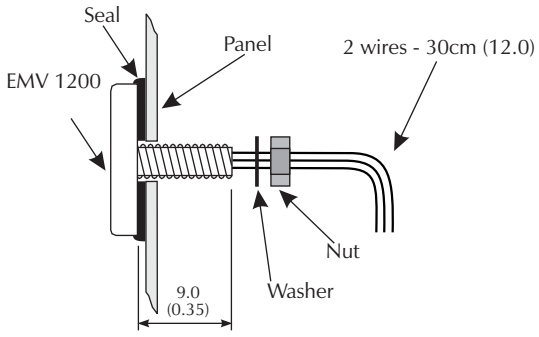

FITTING THE EMV 1200

Drill a 5.5mm / $^{7}/_{32}$" hole in the panel. Fit seal to the rear of the module. Fit the module to the panel by passing its screw threaded stud and the wires through the hole, fitting the washer and tightening the nut provided. Take care not to trap either of the connecting wires. Do not to overtighten the nut as this may damage the meter.

LASCAR

LASCAR ELECTRONICS LTD.
MODULE HOUSE,
WHITEPARISH,WILTSHIRE,
SP5 2SJ, UK
TEL: +44 (0)1794 884567 FAX: +44 (0)1794 884616
E-MAIL: sales@lascar.co.uk

LASCAR ELECTRONICS INC.
4258 WEST 12th STREET,
ERIE,
PA 16505, USA
TEL: +1 (814) 835 0621 FAX: +1 (814) 838 8141
E-MAIL: us-sales@lascarelectronics.com

LASCAR ELECTRONICS (HK) LTD.
8th FLOOR, CHINA AEROSPACE CENTRE,
143 HOI BUN ROAD
KWUN TONG, KOWLOON, HONG KONG
TEL: +852 2389 6502 FAX: +852 2389 6535
E-mail: saleshk@lascar.com.hk

AUTOMOTIVE AND MARINE PROTECTION

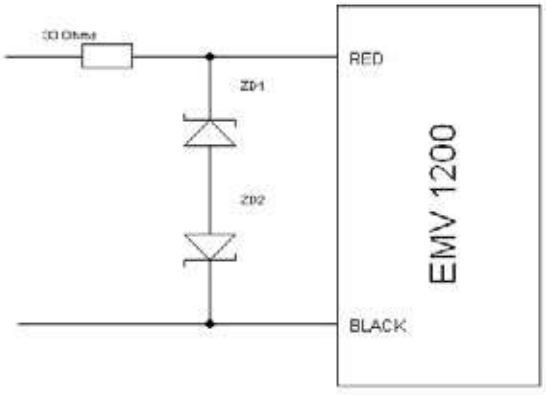

Fig. 1

Automotive and maritime applications can create harsh conditions for electronic devices. Fig. 1 shows the type of protection we recommend is added when the EMV 1200 is used in an application of this nature. We suggest a high wattage 33 ohm resistor is used in series with two 5W zener diodes where the value of each zener is at least 3V higher than the maximum you intend to measure. Alternatively it is possible to use a single 1500W transient voltage suppressor (TVS) in place of the zener diodes. In addition it is recommended that the meter is connected as close to the battery as is convenient.

LASCAR ELECTRONICS LTD.
MODULE HOUSE,
WHITEPARISH,WILTSHIRE,
SP5 2SJ, UK
TEL: +44 (0)1794 884567 FAX: +44 (0)1794 884616
E-MAIL: sales@lascar.co.uk

LASCAR ELECTRONICS INC.
4258 WEST 12th STREET,
ERIE,
PA 16505, USA
TEL: +1 (814) 835 0621 FAX: +1 (814) 838 8141
E-MAIL: us-sales@lascarelectronics.com

LASCAR ELECTRONICS (HK) LTD.
8th FLOOR, CHINA AEROSPACE CENTRE,
143 HOI BUN ROAD
KWUN TONG, KOWLOON, HONG KONG
TEL: +852 2389 6502 FAX: +852 2389 6535
E-mail: saleshk@lascar.com.hk