E20645

Fibre optic diffuse reflection sensor

FT-11-EPA-M4/F2X16X0,265/2M

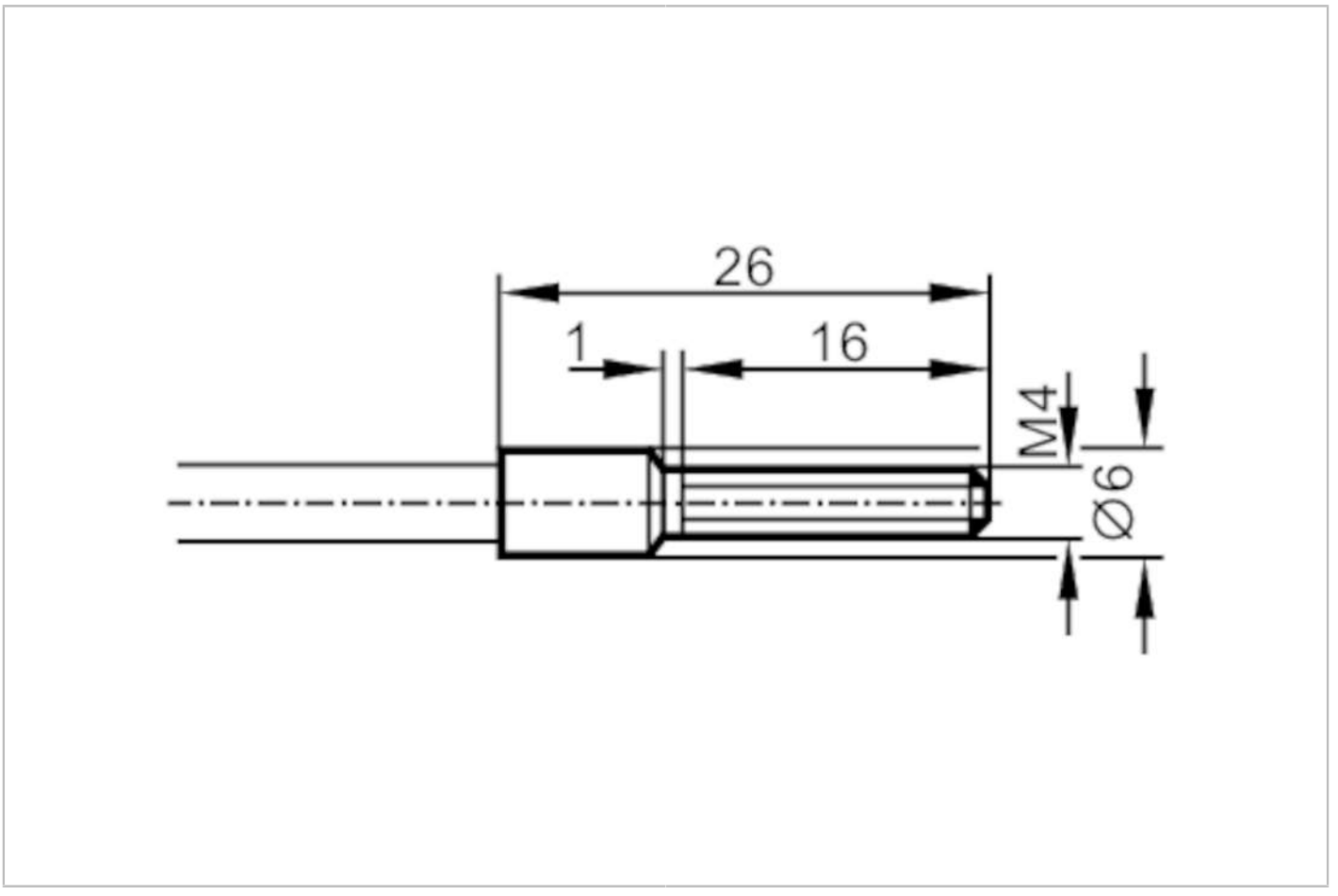

Application		
Function principle		Diffuse reflection sensor
Application		Small bending radius
Detection zone		
Range with fibre optic amplifier type		OB50; OBF; OCF; OO50
OB50		
Range fibre optics	[mm]	60
OBF		
Range fibre optics	[mm]	70
OCF (High Power)		
Range fibre optics	[mm]	620
OO50		
Range fibre optics	[mm]	300
Operating conditions		
Ambient temperature	[°C]	-40...70
Mechanical data		
Weight	[g]	45.5
Version of sensing head		straight
Sensing head thread		M4

E20645

Fibre optic diffuse reflection sensor

FT-11-EPA-M4/F2X16X0,265/2M

Total length	[mm]	2000
Min. bending radius	[mm]	9
Fibre arrangement		◉
Core diameter	[mm]	2 x 16 x 0.25
Fibre material		PMMA
Fibre head material		aluminium
Fibre sheath material		PE
Accessories		
Items supplied		hexagon nuts: 2 x M4
		tooth lock washers: 2
Accessories (optional)		Cutter for fibre optics:, E20600
Remarks		
Pack quantity		1 pcs.