Reliance™
WATER CONTROLS

The Safety Valve Specialist

TMV2
Thermostatic Mixing Valves

Engineered to a high specification, designed for safety and comfort



TMV 2 SCHEME™

BUILDCERT

WRAS APPROVED PRODUCT



Picture © Reliance Worldwide

HOT WATER BURNS LIKE FIRE

is the key phrase in Reliance's campaign to raise the awareness of scalding injuries in the UK.

The striking image of a child about to climb into a steaming hot bath to get his toy is an all too realistic representation of real life situations that can and do happen almost twice a day on average.

This image has been used extensively by the Children's Burns Trust, the TMVA (Thermostatic Mixing Valve Manufacturers Association) and by Reliance Water Controls in the UK to highlight the need for temperature control of hot water systems in homes, offices, hospitals, care homes, schools and other public buildings.

This guide to TMV2 thermostatic mixing valves has been put together to collate the wealth of technical information and expertise that Reliance Water Controls has gained in over 20 years of marketing thermostatic mixing valves in the UK.

About Reliance Water Controls



Reliance Water Controls began its operations in the UK market in 1986. Shortly after this, the first thermostatic mixing valve appeared on our shelves for sale. Now, over 20 years later, Reliance is a recognised market leader in the supply of thermostatic mixing valves. Reliance, a founder member of the TMVA (Thermostatic Mixing Valve Manufacturers Association), was instrumental in the writing, promotion and technical support of the NHS model engineering specification D08 which is now a worldwide recognised benchmark standard for thermostatic mixing valves. Reliance has also worked with Buildcert to give industry input into the creation of the TMV2 and TMV3 schemes. Reliance actively supports the education of the public to the dangers of scalding and through working with organisations such as the CBT (Children's Burns Trust) and CAPT (Child Accident Prevention Trust), has helped to get thermostatic control of hot bath water included in part G of the building regulations for domestic housing in England and Wales. The company has also provided advice, support and technical expertise to the SBSA (Scottish Building Services Agency) when it was decided in 2006 to introduce legislation requiring the fitting of thermostatic mixing valves as standard in domestic properties in Scotland. In addition, Reliance is very active in the field of European standards: working on the committee charged with the revisions of BSEN 1111 and BSEN 1287 (thermostatic mixing valves) and chairing the committee which prepared a new European standard for tempering valves, known as BSEN 15092. Reliance is committed to raising the industry standards and maintaining them at a high level to ensure that thermostatic mixing valves are always fit for purpose and the public are protected from scalding injuries.



Building Regulations: Part G



An update to Part G (sanitation, hot water safety, and water efficiency) of the Building Regulations for England and Wales came into effect in April 2010.

One of the most significant changes effected by this update has been the requirement for temperature control devices in the bathroom of all new domestic properties and major refurbishments which involve the movement or replacement of the bath. This requirement is to limit the temperature of hot water for the bath outlet only, as this is deemed to present the highest scalding risk. The temperature control device must be capable of keeping a precise and stable temperature to a maximum of 48°C. Showers and basins do not fall under the regulation. TMV2 approved thermostatic mixing valves are specifically designed, built and tested for the domestic market. Only valves that have been independently tested and approved for the TMV2 scheme should be used to control the hot water to the bath, as these have undertaken third party testing to ensure they comply with the requirements of Part G.

Another significant addition to Part G is the inclusion of a water efficiency calculator. This means that in each new domestic build, the consumption of water per person per day must not exceed 125 litres. With efficient use of water being at the top of everyone's agenda, this requirement has been put in place to restrict the installation of water guzzling devices in domestic properties. The calculator is used to list each water device used in a property; this list will state the flow rate which each device is limited to, then once totalled, the expected daily usage must not exceed the maximum 125 litres per person restriction.

The TMV2 Approval Process

In order for a manufacturer to get a valve TMV2 approved to BSEN 1111 or BSEN 1287 by Buildcert so that it can be marketed as a TMV2 scheme approved product, there is a very difficult approval process to go through. It starts with the application by the manufacturer in writing that they wish to submit the valve for testing to TMV2. All the relevant information is submitted at this time, including material specifications, drawings, marketing information, instructions etc. Once Buildcert process the application they will then ask the company to submit samples of the valve in question for testing.

If the valve passes all of the required performance tests then it is submitted to the TAP (technical assessment panel): a committee made up of experts from WRc-NSF and independent consultants. This committee will examine the applicant's valve, test results, instructions, marketing information, valve packaging etc to make sure that all of the TMV2 scheme requirements are met. If everything is in order, the TAP will advise the secretary of Buildcert to issue a certificate of approval and to list the valve on the Buildcert website as approved.

The certificates are valid for a period of 5 years, after which the entire procedure starts again.

The Burns Issue

Every year 570 people are admitted to UK hospitals suffering from severe and debilitating scald injuries. In addition, 23 people are killed every year by being immersed in hot water by mistake by a carer or nurse or by falling in to a bath and not being able to get out quickly enough. These are sobering statistics when you consider that the burns suffered by scald victims are every bit as painful and destructive as those suffered by victims of fires or explosions.

A common scenario is a parent filling a bath for a toddler: as is common in the UK the hot tap is turned on first and then the temperature is adjusted by adding cold afterwards, suddenly the doorbell rings, the phone goes or the parent is distracted by another child and leaves the bathroom for a few seconds, the child reaches in to grab his/her favourite toy and falls headfirst into the 60°C uncontrolled hot water. The child will probably raise the alarm and the parent may have the child out of the water in a matter of seconds, but unfortunately even then it is far too late: hot water at this temperature will result in virtually instantaneous third degree burns to all parts of the body that it comes in contact with.



Photo used by permission of NCJ Media
© Newcastle Photos – Buy a Photo

Toddler Kyle suffered extensive scalding burns when he fell into a hot bath at his home in 2006.

Almost 90% of the 570 people who suffer serious scalds each year, which require hospitalisation, are children.

Other groups considered to be at high risk are the elderly and disabled. While children are normally scalded because they do not identify or understand the risk, the elderly and disabled are more likely to be injured or killed as a result of not being physically able to remove themselves from the scalding situation when they find themselves in danger. A typical scenario is a carer or nurse filling a bath of hot water and leaving the person to get in by themselves; quite often the bather will sit on the side of the bath and swing their legs over and into the water. At 60 degrees an adult will suffer third degree burns after less than six seconds of immersion, with an elderly person this time is likely to be even less due to the more sensitive nature and reduced thickness of their skin. Regardless of skin sensitivity, however, it is clear that anyone who is even marginally impeded in their movements is going to suffer a serious scald injury at such temperatures.

90% of all people who are killed each year by scalding are the elderly aged 65 and over.

Temperature versus exposure time

The severity of a burn will be affected by the temperature and the time of exposure to hot water:

Type of Burn	Time of exposure in minutes and seconds							
Temp	45°C	50°C	55°C	60°C	65°C	70°C	75°C	80°C
Adult 3rd	>60 m (e)	300 s	28 s	5.4 s	2.0 s	1.0 s	0.7 s	0.6 s (e)
Adult 2nd	>60 m (e)	165 s	15 s	2.8 s	1.0 s	0.5 s	0.36 s	0.3 s (e)
Child 3rd	50 m (e)	105 s	8 s	1.5 s	0.52 s	0.27 s	0.18 s	0.1 s (e)
Child 2nd	30 m (e)	45 s	3.2 s	0.7 s	0.27 s	0.14 s	<0.1 s	<0.1 s (e)

(e) = estimated

The table has been taken from a 1993 ASSE paper. There are a number of different published figures used to indicate the effect of temperature and time on the severity of the resultant burn. All figures used must be taken as indicators only as from the difference in published figures it is clear that the results will vary from person to person.

Legionella or Burns? The Solution

As indicated in the time versus temperature chart, water below 50°C can be considered 'safe' as even for a child to receive a second degree burn would take 45 seconds, however water stored below 50°C creates a breeding ground for legionella bacteria to breed.

The best solution to both problems is to fit a thermostatic mixing valve at the point of use, ie local to the taps. This will allow the hot water to be stored at a sufficiently high temperature in the water heater to prevent bacteria growth but the TMV will mix cold water and hot together and discharge it out of the tap at a controlled and stable temperature, typically 38-44°C to prevent scalding the end user.

Easy Reference Guide

The reference guide below can help the specifier to decide what type of valve should be fitted depending on the type of facility and the application.

Environment	Appliance	Is a TMV :			Valve type?	Reference documents
		Required by legislation or authoritative guidance?	Recommended by legislation or authoritative guidance?	Suggested best practice?		
Private dwelling	Bath Basin Shower Bidet	Yes Yes		 Yes Yes 	TMV2 TMV2 TMV2 TMV2	Part G - Building Regulations
Housing association dwelling	Bath Basin Shower Bidet	Yes Yes		 Yes Yes 	TMV2 TMV2 TMV2 TMV2	Part G - Building Regulations
Housing association dwelling for the elderly	Bath Basin Shower Bidet	Yes Yes Yes Yes			TMV2 TMV2 TMV2 TMV2	Housing Corp Standard (1.2.1.58 and 1.2.1.59) & Part G-Building Regulations
Hotel	Bath Basin Shower			Yes Yes Yes	TMV2 TMV2 TMV2	Guidance to the Water Regulations (G18.5)
NHS nursing home	Bath Basin Shower		Yes Yes Yes		TMV3 TMV3 TMV3	HTM 04 01 & HTM 64, Care Standards Act 2000, Care Homes Regulation 2001, D08
Private nursing home	Bath Basin Shower		Yes Yes Yes		TMV3 TMV3 TMV3	Guidance to the Water Regulations (G18.6), Care Standards Act 2000, Care Homes Regulations 2001, HSE Care Homes Guidance
Young persons' care home	Bath Basin Shower	Yes Yes Yes			TMV3 TMV3 TMV3	DoH National Minimum Standards Children's homes Regulations, Care Standards Act 2000, Care Homes Regulations 2001, HSE Care Homes Guidance
Schools, including nursery	Basin Shower Bath	 Yes Yes, but 43°C max	Yes		TMV2 TMV2 TMV2	Building Bulletin 87, 2nd edition, The School Premises Regulations/ National minimum care Standards Section 25.8
Schools for the severely disabled including nursery	Basin Shower Bath	 Yes Yes, but 43°C max	Yes		TMV3 TMV3 TMV3	Building Bulletin 87 2nd edition, The School Premises Regulations, if residential, Care Standards Act
NHS hospital	Bath Basin Shower	Yes Yes Yes			TMV3 TMV3 TMV3	HTM 04 01 & HTM 64, D08
Private hospital	Bath Basin Shower		Yes Yes Yes		TMV3 TMV3 TMV3	Guidance to the Water Regulations (G18.6)

Reference documents:
Part G (Sanitation, hot water safety and water efficiency) of the Building Regulations, 2010.
Housing Corp Standard Housing Corporation, Scheme Development Standards, 5th Edition, Housing Corporation 2003.
D08 Model engineering specifications D 08 Thermostatic mixing valves (healthcare premises), NHS Estates, 1997.
Building Bulletin 87 2nd edition School Building and Design Unit Department for Education and Skills. Building Bulletin 87 2nd edition, Guidelines for environmental design in schools. DfES 2003, London.
Guidance to the Water Regulations Department for Environment, Food & Rural Affairs, *Water Supply (Water Fittings) Regulations 1999, Guidance Document relating to Schedule 1: Fluid Categories and Schedule 2: Requirements For Water Fittings.* DEFRA 1999, London.
DoH National Minimum Standards Children's homes Regulations Department of Health, National Minimum Standards, Children's homes Regulations
National minimum care Standards Section 25.8
HSE Care Homes Guidance Health and Safety Executive, Health and Safety in care homes, HSG 220, HSE 2001.
Care Standards Act 2000
Care Homes Regulations 2001
Children's Home Regulations 2001
HTM 04 01 Health Technical Memorandum 04 01: The control of Legionella, hygiene, "safe" hot water, cold water and drinking water systems
Part A: Design, Installation and Testing. **Part B:** Operational Management
HTM64 Health Technical Memorandum 64: Sanitary assemblies

Heatguard® Dual TMV2-3

The Reliance Heatguard Dual TMV2-3 is an approved TMV2 and TMV3 thermostatic mixing valve, therefore it complies with NHS model engineering specification D08, along with BSEN 1111. It enables accurate temperature control, to protect the end user from extreme temperatures, from excessively hot or cold water. The valves come complete with either 2in1 fittings which include check valves and strainers, or 4in1 fittings which incorporate the check valves and strainers plus isolators and test ports.

- **Rapid failsafe on either hot or cold supply failure**
- **Provides stable mixed water temperature**
- **Tamperproof cap**
- **Part G and D08 compliant**
- **Flat faced union connections for ease of maintenance**





Product Range

HEAT 110 616 – 15mm Heatguard Dual TMV2-3 4in1
HEAT 110 625 – 22mm Heatguard Dual TMV2-3 4in1
HEAT 110 617 – 15/22mm Univ. Heatguard Dual TMV2-3 4in1
HEAT 110 614 – 15mm Heatguard Dual TMV2-3 2in1
HEAT 110 624 – 22mm Heatguard Dual TMV2-3 2in1
HEAT 110 615 – 15/22mm Univ. Heatguard Dual TMV2-3 2in1

Typical Installations





Materials

Body	DZR Brass, nickel plated
Internal Components	DZR Brass
Seals	Viton
Spring	Stainless Steel
Piston	Udel
Strainers	Stainless Steel

Specifications

Factory set temperature	38°C
Temperature setting range	38-46°C
Temperature, hot supply	52-65°C
Temperature, cold supply	5-20°C
Minimum temperature differential	10°C min.
Temperature stability (nominal)	+/- 2°C
Static pressure	16bar max.
Operating pressure	0.1 to 6.0 bar
Minimum flow rate	4 l/min
Maximum pressure loss ratio (either supply)	10:1

Note: Optimum performance achieved with equal pressure

Standards

Complies with BSEN 1111, BS 7942, NHS MES D08

Approvals

WRAS

TMV2 & TMV3

Flowrate Graph

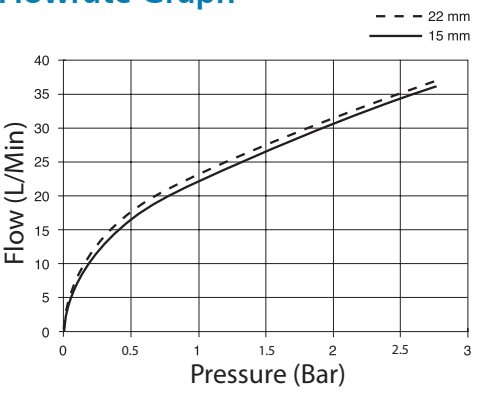

Dimensions

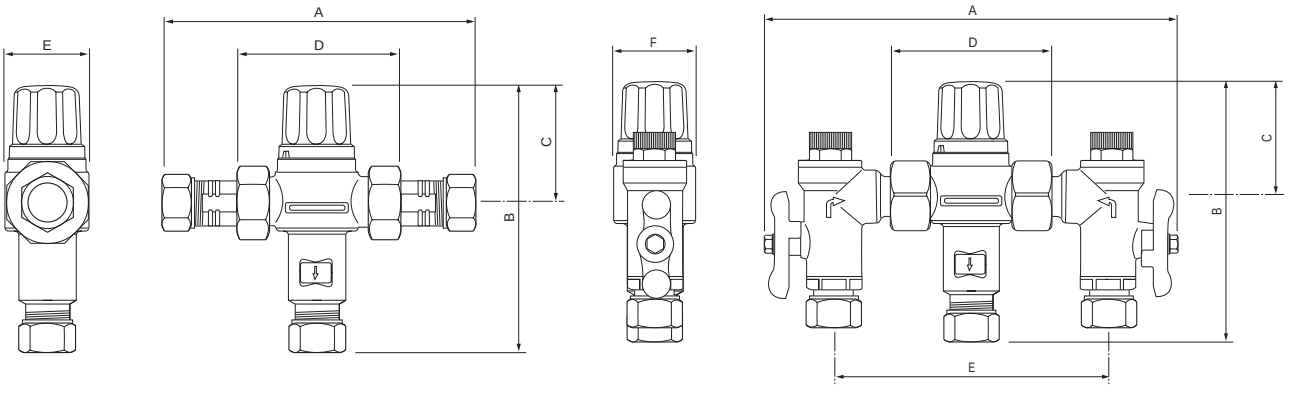

	A	B	C	D	E
HEAT 110 614	130	121	54	72	40
HEAT 110 624	151	123	54	72	40
HEAT 110 615	151	123	54	72	40

	A	B	C	D	E	F
HEAT 110 616	205	121	54	72	134	40
HEAT 110 625	205	123	54	72	134	40
HEAT 110 617	205	123	54	72	134	40

Dimensions in mm unless stated otherwise

Heatguard® BF2-2

The Reliance Heatguard BF2-2 is a high performance TMV2 approved thermostatic mixing valve which has been designed specifically for high flow bath fill when fitted on low pressure domestic systems. It is fully approved by Buildcert to the TMV2 scheme for thermostatic mixing valves in domestic properties. The Heatguard BF2-2 provides precise and stable temperature control and protects the user from thermal shock if either the hot or cold supply fails. Two versions of the Heatguard BF2-2 are available: the 2 in 1 version, and the 4 in 1 version. The 2 in 1 valve has single check valves fitted to its inlets to prevent crossflow and disc type stainless steel strainers fitted in front of the check cartridges to protect them from being damaged by system contamination. The 4 in 1 valve has specially constructed inlet fittings incorporating isolation, filtration and a test point for temperature and pressure.

- **Excellent temperature stability, using a quick reaction thermostat, reducing the risk of uncontrolled hot water temperature and giving a positive shut down if the hot or cold supply fails**
- **High quality and technically advanced internal components provide excellent scale resistance and improved lifespan**
- **High flow rates at very low inlet pressure make the Heatguard BF2-2 ideal for gravity fed systems**
- **Minimal moving parts and simple construction reduce maintenance service intervals**

Product Range

HEAT 115 100 – Heatguard BF2-2 2in1

HEAT 115 105 – Heatguard BF2-2 4in1





Typical Installation



Materials

Body	Gunmetal
Seals	Nitrile
Spring	Stainless steel
Piston	Polysulfone
Fittings	DZR brass
Strainers	Stainless steel

Standards

Complies with BSEN 1111, BSEN 1287

Approvals

WRAS Approved
TMV2 Approved

Specifications

Factory temperature setting	41°C
Temperature setting range	35-50°C
Temperature, hot supply (55-60°C is recommended)	52-90°C
Temperature, cold supply	5-25°C
Minimum hot to mix differential temperature	10°C
Temperature stability	± 2°C
Maximum static pressure	16 bar
Working pressure range, dynamic	0.1-6.0 bar
Maximum pressure loss ratio	10:1
Minimum flow rate	4 lpm
Flow rate @ 1bar pressure loss	75 lpm

Flowrate Graph

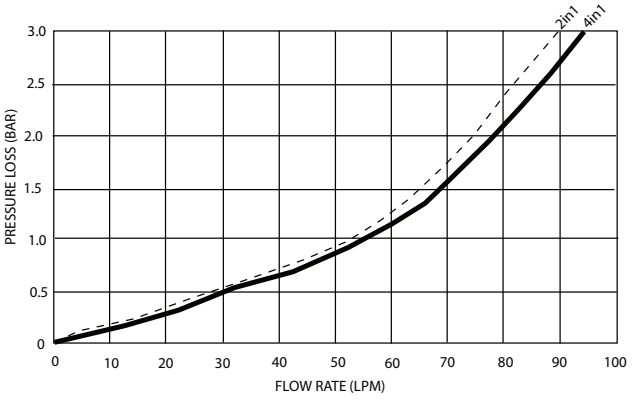

Dimensions

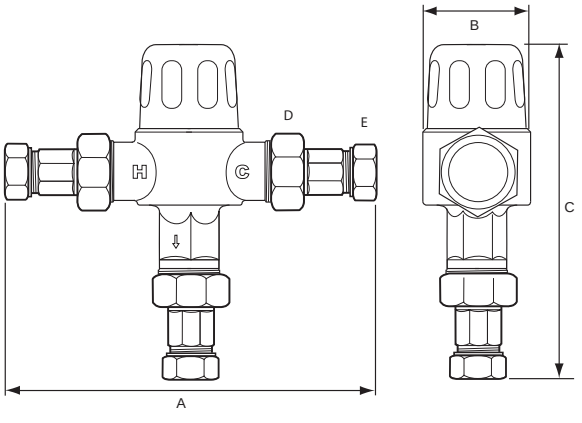

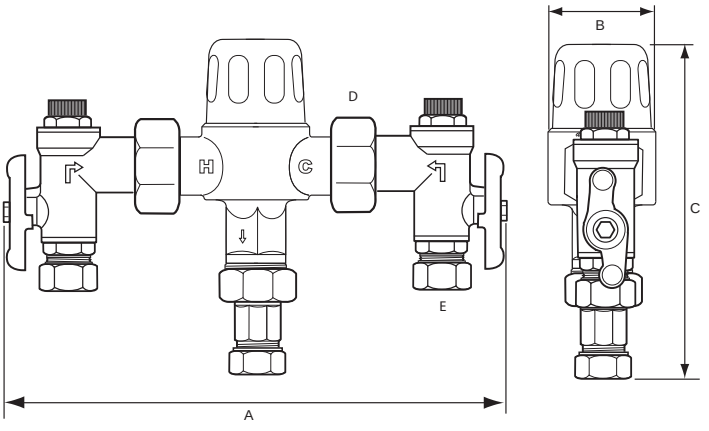

	A	B	C	D	E
HEAT 115 100	180	57	178	1" BSP	22mm

	A	B	C	D	E
HEAT 115 105	245	57	178	1" BSP	22mm

Dimensions in mm unless stated otherwise

Heatguard® LS2

The Heatguard LS2 is a TMV2 approved thermostatic mixing valve which is particularly suited to retrofit applications. The LS2 is known as an "L" pattern mixing valve: this means that, unlike most valves where the hot and cold ports are opposite from each other, the hot and mixed outlet ports are opposing. This saves a significant amount of installation time, particularly in retrofit applications, because of the reduced need for pipework modifications. The orientation of the valve and its compactness also means that it can easily be hidden behind a pedestal basin. The LS2 is fully approved by Buildcert to the TMV2 scheme and is suited for domestic or medium risk commercial applications (such as leisure centres, senior schools, offices etc). The LS2 is also fully WRAS approved and complies with the requirements of the UK water regulations.

- **L pattern valve is simple to install and service**
- **Rapid failsafe on either hot or cold supply failure**
- **Provides stable mixed water temperature**
- **Tamperproof setting adjustment**
- **Protection against dirty systems via integral strainers**
- **Protection against cross flow via check valves**

Product Range

HEAT 260 500 – 15mm Heatguard LS2

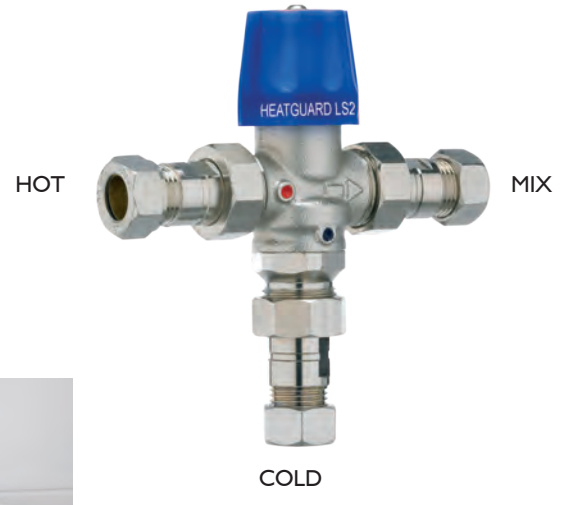

Typical Installation



Materials

Body	Gunmetal
Seals	Nitrile
Spring	Stainless steel
Piston	Polysulfone
Fittings	DZR brass
Strainers	Stainless steel

Specifications

Factory temperature setting	38°C
Temperature setting range	38-48°C
Temperature, hot supply (55°C-60°C is recommended)	52-90°C
Temperature, cold supply	5-20°C
Minimum hot to mix differential temperature	15°C
Temperature stability	± 2°C
Maximum static pressure	16 bar
Minimum working pressure	0.5 bar
Working pressure range, dynamic	1-5.0 bar
Maximum pressure loss ratio	2:1
Minimum flow rate	4 lpm
Flow rate @ 1bar pressure loss	15 lpm

Standards

Complies with BSEN 1111

Approvals

WRAS Approved

TMV2 Approved

Flowrate Graph

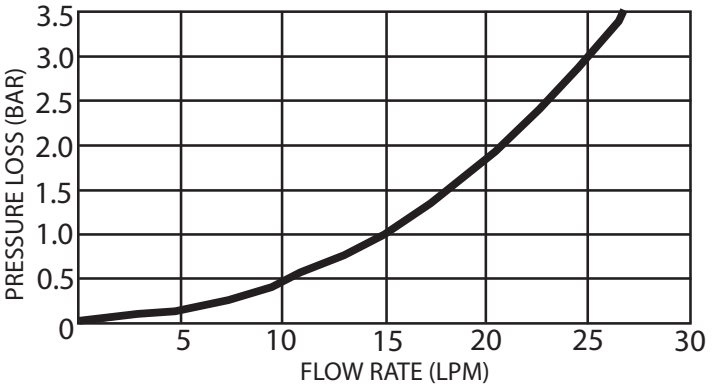

Dimensions

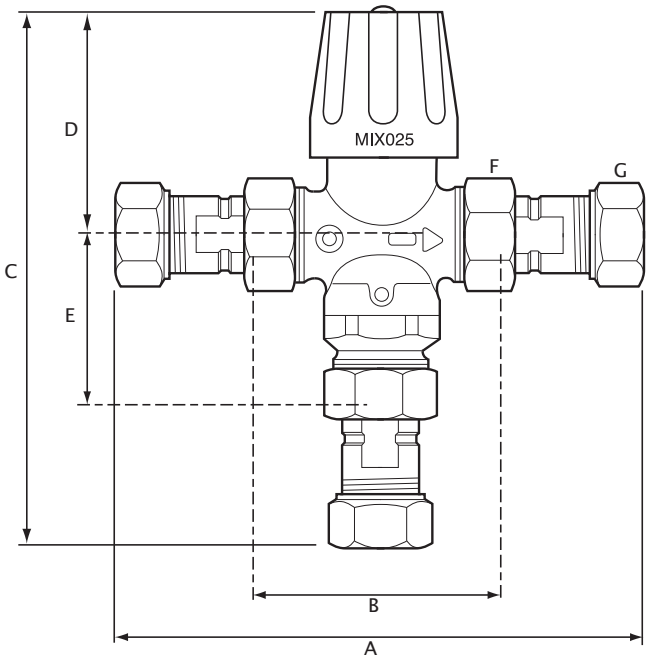

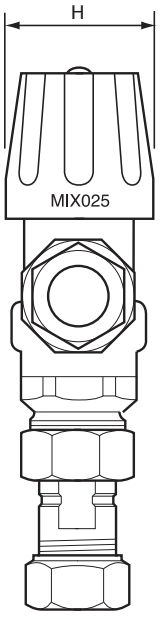

	A	B	C	D	E	F	G	H
HEAT 260 500	144	73	145	60	45	¾" BSP	15mm	45

Dimensions in mm unless stated otherwise

Reliance WATER CONTROLS™

The Safety Valve Specialist

TMV2
Thermostatic Mixing Valves

Reliance Water Controls Ltd
A Reliance Worldwide Company

Worcester Road, Evesham,
Worcestershire, WR11 4RA, UK

UK - Freephone: 0800 389 5931
Freefax: 0800 389 5932
Outside UK - Tel: +44 (0) 1386 712400
Fax: +44 (0) 1386 712401

Email: sales@rwc.co.uk

www.rwc.co.uk

Reliance has prepared the content of this document carefully but disclaims all warranties, express or implied, as to the accuracy of the information contained herein. Reliance reserves the right to make changes to the product and the information contained in this document at any time.

TMV2 – 003 – 07/11

© Reliance Water Controls Ltd 2011

TMV 2 SCHEME™

BUILDCERT

WRAS APPROVED PRODUCT

