DV1330

3-segment signal light

LED-Tower-3/Std/Buzzer

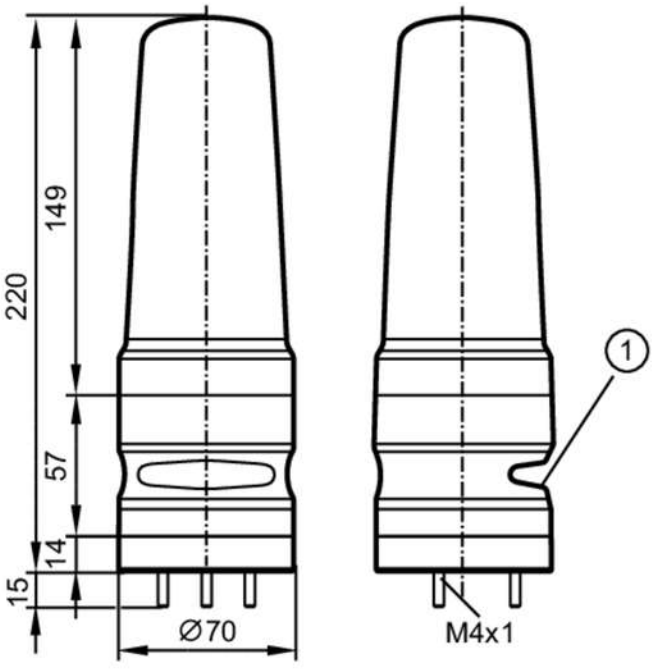

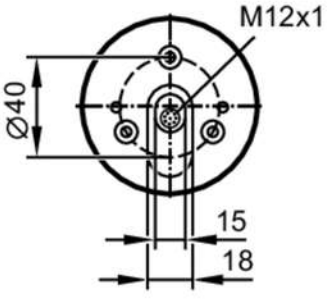

1 buzzer

CE cULus IO-Link

Application		
Application		signalling machine conditions
Electrical data		
Operating voltage	[V]	18...30 DC; (to SELV/PELV)
Nominal voltage DC	[V]	24
Current consumption	[mA]	< 200
Inputs / outputs		
Number of inputs and outputs		Number of digital inputs: 4
Inputs		
Number of digital inputs		4
Input current High	[mA]	6
Interfaces		
Communication interface		IO-Link
Transmission type		COM2 (38,4 kBaud)
IO-Link revision		1.1

DV1330

3-segment signal light

LED-Tower-3/Std/Buzzer

SDCI standard		IEC 61131-9	
SIO mode		yes	
Required master port type		A	
Min. process cycle time	[ms]	3.2	
Supported DeviceIDs		**Type of operation**	**DeviceID**
		default	1466
Operating conditions			
Ambient temperature	[°C]	-25...50	
Storage temperature	[°C]	-40...75	
Max. relative air humidity	[%]	90	
Air pressure	[kPa]	< 106	
Max. height above sea level	[m]	2000	
Protection		IP 54	
Tests / approvals			
UL approval		power supply	Class 2
Mechanical data			
Weight	[g]	427.3	
Dimensions	[mm]	Ø 70 / L = 220	
Materials		housing: ABS; lens: PC	
Displays / operating elements			
Display		status	1 x LED, green
		LED segment	3 x 4 LED
Acoustic signal		buzzer	
Max. sound pressure	[dB]	85	
Accessories			
Accessories (optional)		mounting base, E89060	
		wall bracket, E89061	
		Mounting adapter, E89063	
		bracket with lateral cable entry, E89064	
		mounting tube, E89065	
		mounting tube, E89066	
		mounting tube, E89067	
Remarks			
Remarks		For further information please see the operating instructions.	
Pack quantity		1 pcs.	
Electrical connection - plug			

Connector: M12; coding: A



DV1330

3-segment signal light

LED-Tower-3/Std/Buzzer

Connection	
1	n.c.
2	buzzer
3	digital input LED segment 3
4	digital input LED segment 2
5	power supply
6	digital input LED segment 1
7	n.c.
8	IO-Link (C/Q)