Current Transducer HX 03 ... 50-P series

I_{PN} = 3 ... 50 A

For the electronic measurement of currents: DC, AC, pulsed..., with galvanic separation between the primary circuit and the secondary circuit.

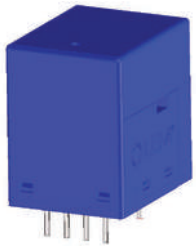

Electrical data

Primary nominal current RMS I_{PN} (A)	Primary current measuring range I_{PM} (A)	Primary conductor diameter × turns (mm)	Type
3	±9	0.6d × 20T	**HX 03-P**
5	±15	0.8d × 12T	**HX 05-P**
10	±30	1.1d × 6T	**HX 10-P**
15	±45	1.4d × 4T	**HX 15-P**
20	±60	1.6d × 3T	**HX 20-P**
25	±75	1.6d × 2T	**HX 25-P**
50	±150	1.2d × 6.3 × 1T	**HX 50-P**

U_{out}	Output voltage (Analog) @ $\pm I_{PN}$, R_L = 10 kΩ, T_A = 25 °C	±4	V
R_{out}	Output internal resistance	< 50	Ω
R_L	Load resistance	≥ 10	kΩ
U_C	Supply voltage (±5 %) [1]	±15	V
I_C	Current consumption	< ±15	mA

Accuracy - Dynamic performance data

ε	Error @ I_{PN}, R_L = 10 kΩ, T_A = 25 °C	≤ ±1	% of I_{PN}
ε_L	Linearity error (0 ... $\pm I_{PN}$)	≤ ±1	% of I_{PN}
U_{OE}	Electrical offset voltage, @ I_P = 0, T_A = 25 °C	< ±40	mV
U_{OM}	Magnetic offset voltage @ I_P = 0 after an excursion of 1 × I_{PN}	< ±15 (Typ)	mV
TCU_{OE}	Temperature of coefficient of U_{OE} maximum	< ±1.5	mV/K
TCU_{out}	Temperature of coefficient of U_{out} (% of reading)	±0.1	%/K
$t_{D\,90}$	Delay time to 90 % of the output value for I_{PN} step [2]	≤ 3	µs
BW	Frequency bandwidth (−3 dB) [3]	50	kHz

General data

T_A	Ambient operating temperature	−25 ... +85	°C
T_{Ast}	Ambient storage temperature	−25 ... +85	°C
m	Mass	8	g
	Standard	EN 50178: 1997	

Notes: [1] Also operate at ±12 V power supplies, measuring range reduced to ±2.5 × I_{PN}

[2] For a di/dt = 50 A/µs

[3] Small signal only to avoid excessive heating of the magnetic cores.

Features

- Hall effect measuring principle
- Galvanic separation between primary and secondary circuit
- Insulation voltage 3000 V
- Low power consumption
- Power supply from ±12 V to ±15 V
- Extended measuring range (3 × I_{PN})
- Insulating plastic case recognized according to UL 94-V0.

Advantages

- Low insertion losses
- Easy mount with automatic handling system
- Small size and space saving
- Only one design for wide current ratings range
- High immunity to external interference.

Applications

- AC variable speed drives and servo motor drives
- Static converters for DC motor drives
- Battery supplied applications
- Uninterruptible Power Supplies (UPS)
- Switched Mode Power Supplies (SMPS)
- Electrical appliances.

Application domain

- Industrial.

6April2023/version 16

LEM reserves the right to carry out modifications on its transducers, in order to improve them.

LEM International SA
Route du Nant-d'Avril, 152
1217 Meyrin
www.lem.com

Current Transducer HX 03 ... 50-P series

Insulation coordination

U_d	RMS voltage for AC insulation test, 50 Hz, 1 min	> 3	kV
U_t	Partial discharge RMS test voltage (q_m < 10 pC)	≥ 1	kV
U_{Ni}	Impulse withstand voltage 1.2/50 µs	≥ 6	kV
		Min	
d_{Cp}	Creepage distance	5.5	mm
d_{Cl}	Clearance	5.5	mm
CTI	Comparative Tracking Index (group I)	600	

Applications examples

According to EN 50178 and IEC 61010-1 standards and following conditions:

- Over voltage category OV 3
- Pollution degree PD2
- Non-uniform field

	EN 50178	IEC 61010-1
d_{Cp}, d_{Cl}, U_{Ni}	Rated insulation voltage	Nominal voltage
Basic insulation	600 V	600 V
Reinforced insulation	300 V	150 V

Safety

This transducer must be used in limited-energy secondary circuits according to IEC 61010-1.



This transducer must be used in electric/electronic equipment with respect to applicable standards and safety requirements in accordance with the manufacturer's operating instructions.



Caution, risk of electrical shock

When operating the transducer, certain parts of the module can carry hazardous voltage (eg. primary busbar, power supply). Ignoring this warning can lead to injury and/or cause serious damage.
This transducer is a build-in device, whose conducting parts must be inaccessible after installation. A protective housing or additional shield could be used.
Main supply must be able to be disconnected.

LEM reserves the right to carry out modifications on its transducers, in order to improve them.

LEM International SA
Route du Nant-d'Avril, 152
1217 Meyrin
www.lem.com

Dimensions HX 03 ... 50-P series (in mm)

HX 03 ... 25-P series

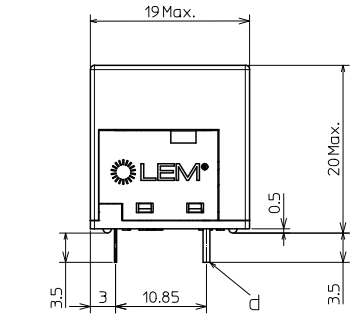

HX 50-P

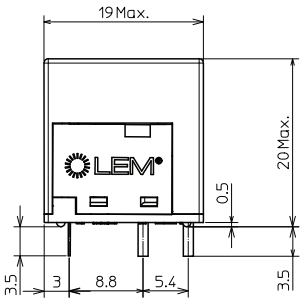

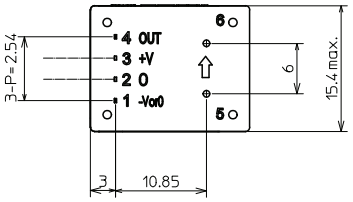

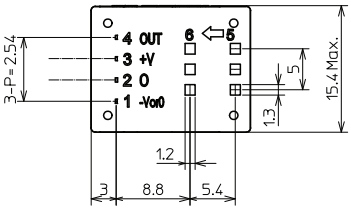

Connection

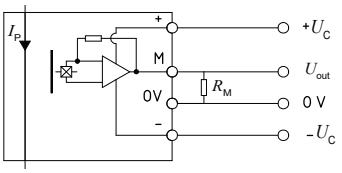

	d_{Cl}	d_{Cp}
A–B	5.5	5.5

Terminal Pin (Identification)

1	−15 V
2	0 V
3	+15 V
4	Output
5	Primary input Current (+)
6	Primary input Current (−)

Primary conductor diameter

HX	HX 03-P	HX 05-P	HX 10-P	HX 15-P	HX 20-P	HX 25-P	HX 50-P
d	0.6	0.8	1.1	1.4	1.6	1.6	1.2 × 6.3

Mechanical characteristics

- General tolerance ±0.5 mm
- Connection of secondary 4 pins
  0.5 × 0.25 mm

Remarks

- U_{out} is positive when I_P flows in the direction of the arrow.
- Temperature of the primary conductor should not exceed 100 °C.
- Please do not apply any extra forces to both primary and secondary terminals when mounting onto printed circuit board. Insertion forces apply to HX 50-P primary terminal should be limited to below 10 N.
- This is standard model. For different versions (supply voltages, turns ratios, unidirectional measurements...), please contact us.

LEM reserves the right to carry out modifications on its transducers, in order to improve them.

LEM International SA
Route du Nant-d'Avril, 152
1217 Meyrin
www.lem.com