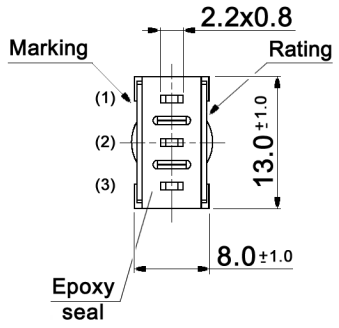

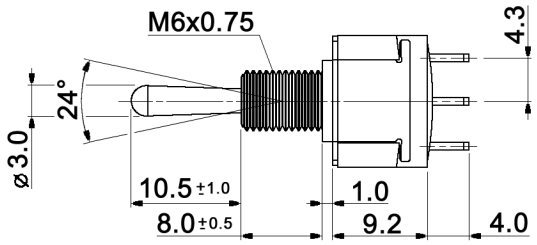

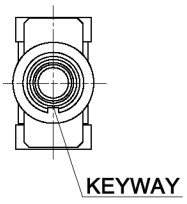

PANEL MOUNTING

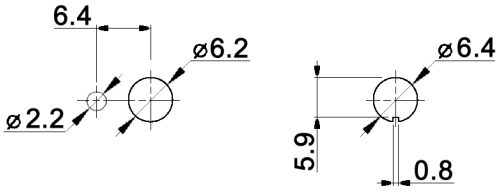

CONTACT ARRANGEMENT

code for x	function	toggle towards keyway	toggle opposite to keyway
D	On-On	1-2	2-3
F	Mom-On		

code for x	function	toggle towards keyway	toggle in center	toggle opposite to keyway
E	On-Off-On	1-2	open	2-3
G	Mom-Off-Mom			
H	Mom-Off-On			

Specifications:

Contact rating:	3A, 250V AC / 6A, 125V AC 4A, 30V DC / 5A, 12V DC 6A, 6V DC
Contact resistance:	20mOhm max.
Insulation resistance:	1 000MOhm min. at 500V DC
Dielectric strength:	1 500V, 50Hz for the duration of 1 minute
Operating temperature:	-45°C to +140°C
Mechanical life:	min. 200 000 cycles
Soldering conditions:	hand-soldering: max.: 420°C, 3sec., 60W auto-soldering: max.: 270°C, 5sec.
Mounting instruction:	max. torque: 49Ncm
Material:	Contact portion: solid silver Other conducting parts: brass, 10µm silver plated over 1.5µm nickel Case: DAP Housing: stainless steel, CNS9265 Bushing: copper alloy, C3604BD nickel plated Actuator: copper alloy, C3604BD chrome plated
Included accessories:	2 pcs. nut M6x0.75, nickel plated, 9mm wrench size 1 pc. tooth washer 1 pc. locking washer

RoHS-conform 2002/95/EC

Tolerances: 0.00: ±0.25mm 0.0: ±0.40mm			Date	Name
			02/09	dr
Material	07/11	dr		
Dimension	01/11	dr		
Panel mounting	05/10	dr		
Switch function	04/09	dr		
Modifications	Date	Name		

MTA 106 x

knitter-switch

30 17 11

Page 1/1