Mini installation beacon / LED Beacon 816

LED Blinking Beacon EM 24VAC/DC RD



Part No.: 816.110.55

MECHANICAL DATA	
Height	97 mm
Diameter	75 mm
Materials	PC PC/ABS
Dome colour	Red
Protection category	IP65
Connection	Screw terminals
cross-sectional area maximum	1,50mm² / 16AWG
Cable entry	Through hole
Cable entry maximum	d = 9 mm
Tension relief	Present (conforms to VDE)
Type of fixing	Built-in mounting
Working temperature minimum	-20°C
Working temperature maximum	+50°C
Weight with packaging	123 g
Product weight	97 g

ELECTRICAL DATA	
Operating voltage	24V
Operating voltage type	AC/DC
Operating voltage frequency	50Hz
Operating voltage tolerance	+/- 10%
Rated operational voltage	24 VDC
Rated operational current	45 mA
Rated inrush current	500 mA
Protection class	Protection class 2
Pollution degree	3 In the connection area: 2

OPTICAL DATA	
Light source	LED
Light colour	Red
Optical signal image	Blink
Blink frequency (Hz)	1 Hz
Service life optical	100,000 h maximum

APPROVAL DATA	
Conforms with CE	Yes
WEEE	Yes
Conforms with ATEX-directive	No

! For additional installation and mounting information, refer to the appropriate user guide at www.werma.com. This printed copy is for information only and is subject to alteration.

Mini installation beacon / LED Beacon 816

LED Blinking Beacon EM 24VAC/DC RD

Conforms with CCC	No
Conforms with UL	cULus
UL Type Rating	Type 12
Conforms with FCC	No
Conforms with IC	No
EAC certificate available	Yes
Conforms with AS-I	No
ICAO Certification	No
Conforms with DNV	No
Conforms with RoHS CN	No
Conforms with VdS	No

DRAWING

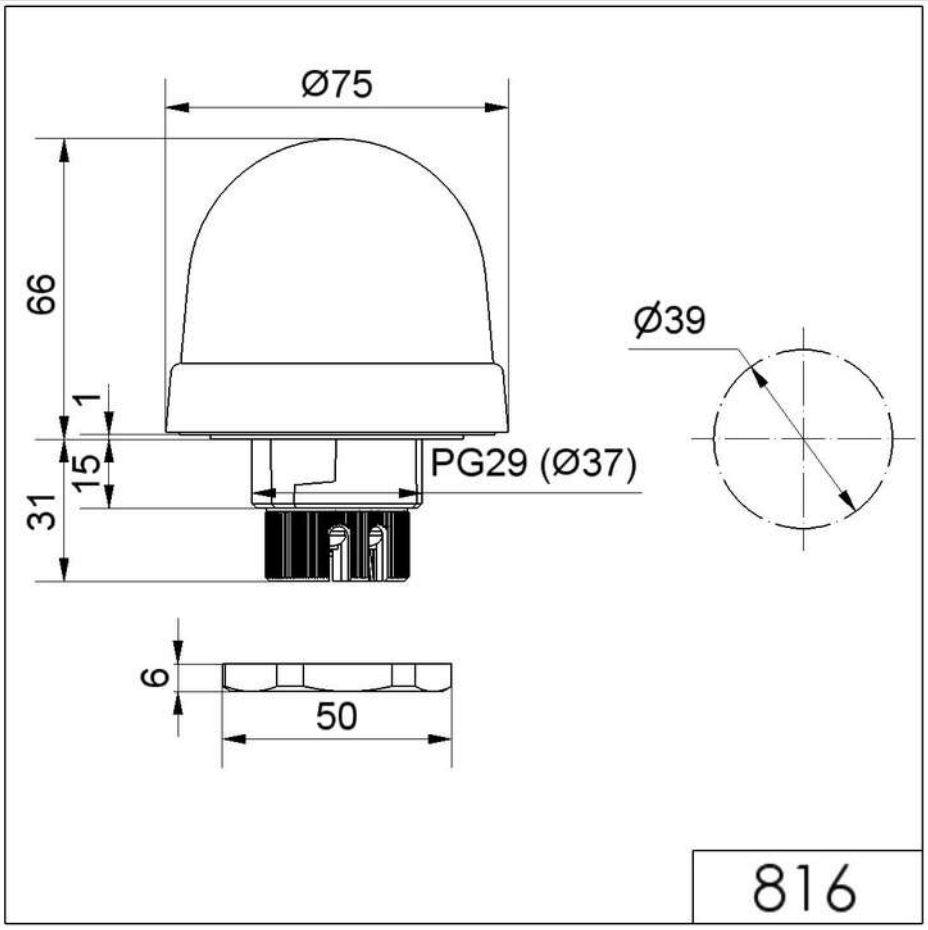

! For additional installation and mounting information, refer to the appropriate user guide at www.werma.com. This printed copy is for information only and is subject to alteration.