Product datasheet
Characteristics

xs212sanam12
inductive sensor XS2 M12 - L61mm - stainless - Sn7mm - 12..24VDC - M12

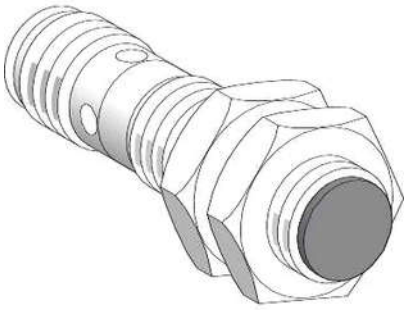

Main

Range of product	OsiSense XS
Series name	Application
Sensor type	Inductive proximity sensor
Product specific application	Food and beverage
Sensor name	XS2
Sensor design	Cylindrical M12
Size	61 mm
Body type	Fixed
Detector flush mounting acceptance	Non flush mountable
Material	Stainless steel
Type of output signal	Discrete
Wiring technique	3-wire
[Sn] nominal sensing distance	7 mm
Discrete output function	1 NO
Output circuit type	DC
Discrete output type	NPN
Electrical connection	4 pins M12 male connector
[Us] rated supply voltage	12...24 V DC with reverse polarity protection
Switching capacity in mA	<= 200 mA with overload and short-circuit protection
IP degree of protection	IP69 K conforming to DIN 40050 IP67 conforming to IEC 60529

Complementary

ISO thread	M12 x 1
Detection face	Frontal
Front material	PPS
Enclosure material	Stainless steel 316 L
Operating zone	0...5.6 mm
Differential travel	1...15% of Sr
Status LED	1 LED yellow for output state
Supply voltage limits	10...36 V DC
Switching frequency	<= 2500 Hz
Voltage drop	<= 2 V at closed state
Current consumption	<= 10 mA at no-load
Delay first up	<= 10 ms
Delay response	<= 0.2 ms
Delay recovery	<= 0.2 ms
Marking	CE
Threaded length	37 mm
Length	61 mm
Product weight	0.035 kg

Environment

Product certifications	CSA

The information provided in this documentation contains general descriptions and/or technical characteristics of the performance of the products contained herein.
This documentation is not intended as a substitute for and is not to be used for determining suitability or reliability of these products for specific user applications.
It is the duty of any such user or integrator to perform the appropriate and complete risk analysis, evaluation and testing of the products with respect to the relevant specific application or use thereof.
Neither Schneider Electric Industries SAS nor any of its affiliates or subsidiaries shall be responsible or liable for misuse of the information contained herein.

	UL
Ambient air temperature for operation	-25...85 °C
Ambient air temperature for storage	-40...85 °C
Vibration resistance	25 gn amplitude = +/- 2 mm (f = 10...55 Hz) conforming to IEC 60068-2-6
Shock resistance	50 gn for 11 ms conforming to IEC 60068-2-27

Offer Sustainability

Sustainable offer status	Green Premium product
RoHS	Compliant - since 0821 - Schneider Electric declaration of conformity
Product environmental profile	Available
Product end of life instructions	Available