Bourdon Tube Pressure Gauges, Stainless Steel
Type 23X.50
Item no.: 48756205

Description	
Design	EN 837-1
Nominal size	063 mm
Accuracy class	class 1.6
Scale range	0...60 bar
Unit of outer Scale	bar
Process connection	G 1/4 B
Connector location	lower mount
Materials	
Measuring system	stainless steel
Movement	
Dial	Aluminum, white
Pointer	aluminium, black
Case material	Stainless steel 1.4301
Window	laminated safety glass
Bezel ring	cam ring (bayonet type), stainless steel
Case filling fluid	prepared for filling
Operating conditions	
Permissible medium temperature	+ 200 °C
Permissible ambient temperature	-40 ... +60 °C
Ingress protection	IP 65

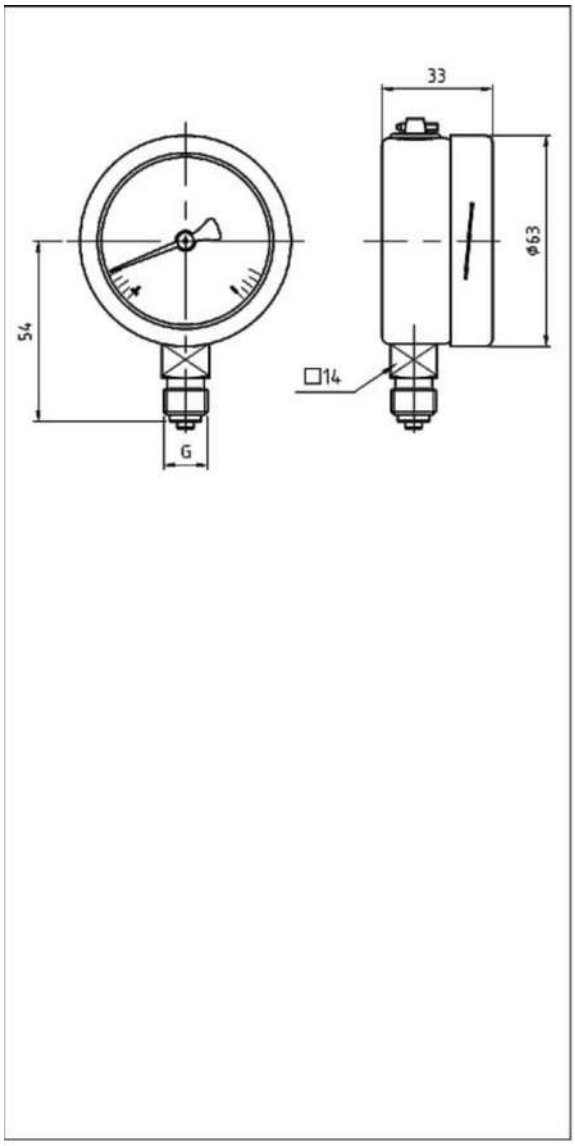

WIKA Instruments – 38 Avenue du Gros Chêne – 95220 HERBLAY
Phone0 820 95 10 10
info_fr@wika.com • http://www.wika.fr