ANCILLARIES

METAL GUARDS

W2G 075, 076
W2S 076
Type 9480 - 2 - 4039

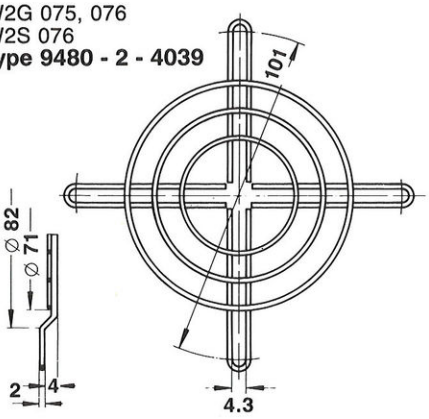

W2G 086
W2S 086
Type 9483 - 2 - 4039

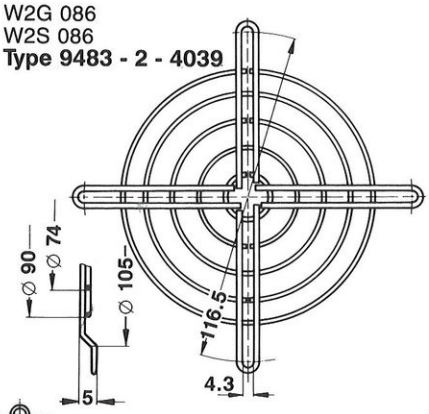

W2G 107, 110, 113
W2S 107, 110
Type 9497 - 2 - 4039

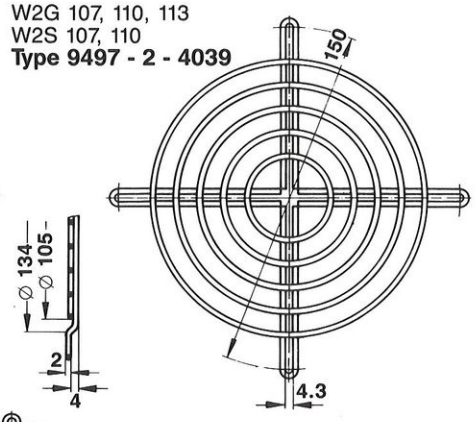

W2G 115
W2S 115
Type 9496 - 2 - 4039

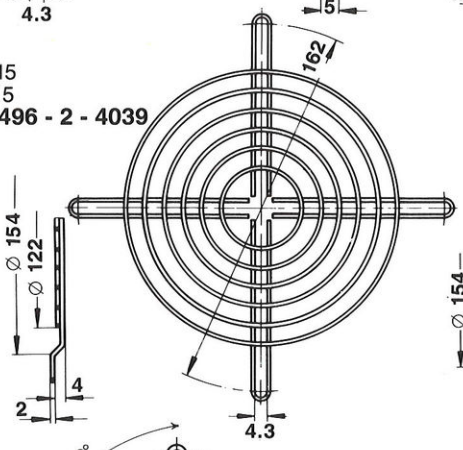

W2S 130 . . .
W2G 130 . . .
Type 9498 - 2 - 4039

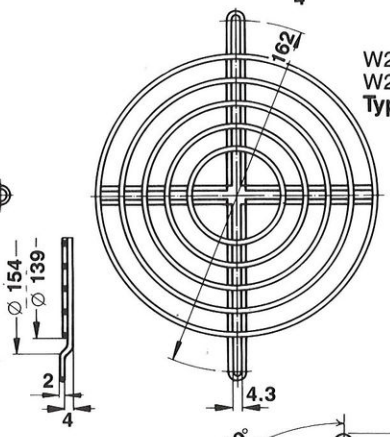

W2E 143
W2G 144
W2S 143
Type 4013 - 2 - 4039

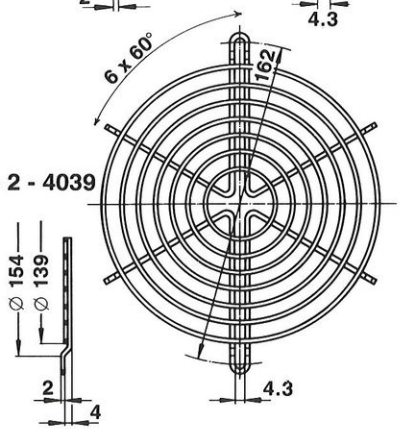

W2E 142
Type 3749 - 2 - 4039

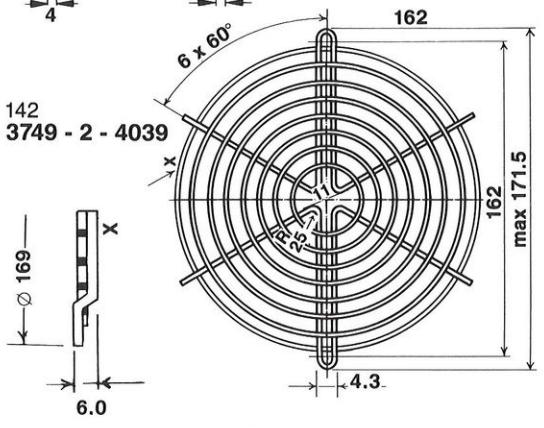

PLASTIC GUARDS

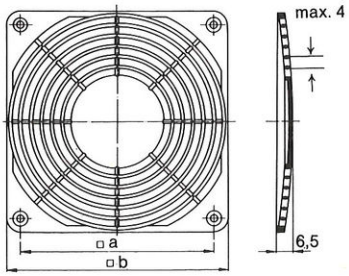

Style

"A" barbed inserts

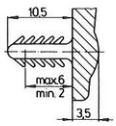

"B" through-holes



"C" through-holes

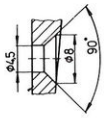

Fan	a	b	Style	Type
W2.076...	71,5	80	A	92162-2-2929
			B	92163-2-2929
W2.086...	82,5	92	A	92439-2-2929
			C	92440-2-2929
W2.107...	105	119	A	92164-2-2929
W2.110...			C	92165-2-2929