35GLT2R82

Ø 35 mm • Graphite-Copper commutation • 160 mNm

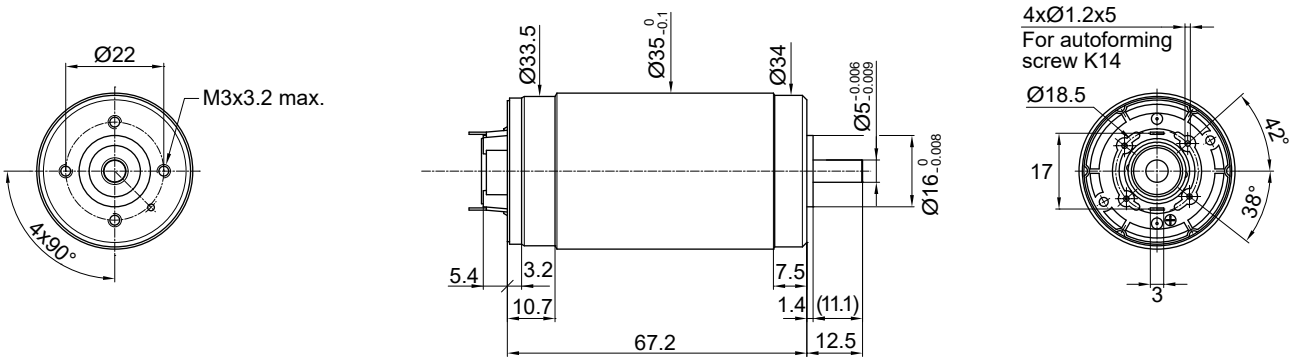

Dimensions in mm.

Electrical Data	Symbol	35GLT2R82 •••• .1					Unit
		426P	326P	234E	426SP	426E	
1 Nominal Voltage	V	24	24	48	48	90	Volt
2 No-Load Speed	n_0	6,260	5,835	7,490	6,175	5,439	rpm
3 No-Load Current	I_0	120.0	120.0	70.0	60.0	60.0	mA
4 Terminal Resistance	R	0.7	0.9	2.3	2.5	9.5	Ω
5 Output Power	$P_{2max.}$	136.0	124.0	122.0	142.0	150.0	W
6 Stall Torque	mNm	1327 (187.92)	1043 (147.71)	1300 (184.1)	1409 (199.54)	1487 (210.58)	mNm (oz-in)
7 Efficiency	$h_{max.}$	89	87	89	89	85	%
8 Max Continuous Speed	$n_{e\ max.}$	10,000	10,000	10,000	10,000	10,000	rpm
9 Max Continuous Torque	$M_{e\ max.}$	142 (18.7)	132 (18.7)	130 (18.41)	150 (21.25)	160 (22.66)	mNm (oz-in)
10 Max Continuous Current	$I_{e\ max.}$	4.20	3.50	2.20	2.10	1.05	A
11 Back-EMF Constant	k_E	3.82	4.09	6.39	7.75	16.44	mV/rpm
12 Torque Constant	k_M	36.50	39.10	61.00	74.00	157.00	mNm/A
13 Motor Regulation	R/k^2	0.5	0.6	0.6	0.46	0.39	10^3/Nms
14 Friction Torque	T_F	4.38 (0.63)	4.69 (0.67)	4.27 (0.61)	4.44 (0.63)	9.42 (1.34)	mNm (oz-in)
15 Rotor Inductance	L	0.10	0.15	0.25	0.40	1.70	mH
16 Mechanical Time Constant	τ_m	3.9	4.4	4.0	4.0	2.7	ms
17 Rotor Inertia	J	83.00	75.00	65.00	85.00	70.00	g-cm²

General Data			
18 Thermal Resistance (rotor/body)	R_{th1}/R_{th2}	4/8	°C/W
19 Thermal Time Constant (rotor/stator)	t_{W1}/t_{W2}	75/950	S
20 Operating Temperature Range:	motor	-30°C to 85°C (-22°F to 185°F)	°C (°F)
	rotor	100°C (212°F)	°C (°F)
21 Shaft Load Max.:		With ball bearings	
(5 mm. from bearing)	-radial	35.0 (125.9)	N (oz)
	-axial	100 (359.6)	N (oz)
22 Shaft Play:	-radial	negligible	mm (inch)
	-axial	negligible	mm (inch)
23 Weight	g	360 (12.7)	g (oz)
24 Commutation Segment	-	13	segment

Execution Table

Gearbox	Single Shaft	E9	HEDS
R32	1	50	Upon Request
R40	1	50	Upon Request

No Load Speed vs. Torque

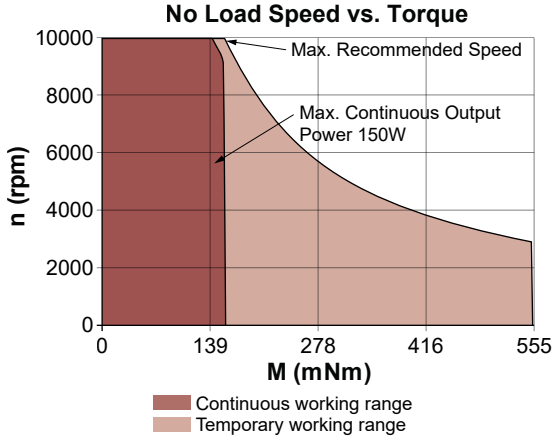

▶ Motor shaft rotates CW when seen from motor front face when +ve and -ve supply is given to respective terminals.