RSSD-RSSD-4416-1M
Industrial Ethernet/PROFINET Cable – PUR Cable Jacket

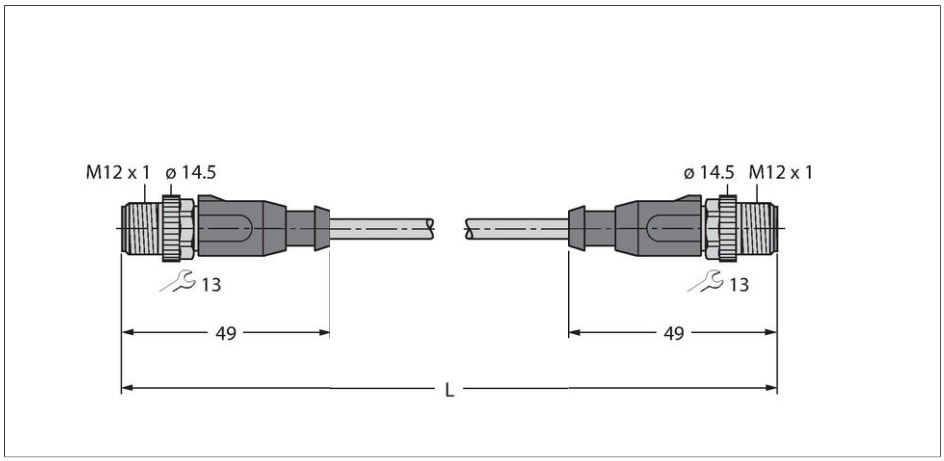

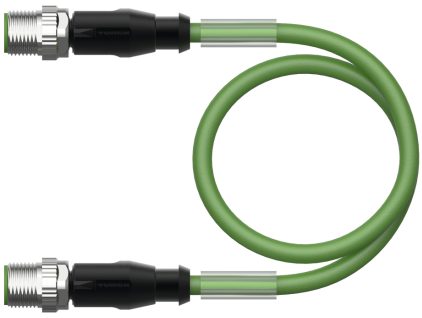

Technical data

Type	RSSD-RSSD-4416-1M
ID no.	6441650
Connector A	Male, M12 × 1, Straight, D-coded
Number of Pins	4
Contacts	Metal, CuZn, Gold-plated
Contact carriers	Plastic, PA, UL 94, Black
Connector body	Plastic, TPU, UL 94, Black
Coupling nut/screw	Brass, GD-Zn, Nickel-plated
Tightening torque (range)	0.4 … 0.6 Nm (observe max. torque of mating connector!)
Mechanical lifespan	> 100 Mating cycles
Pollution degree	3/2
Type of protection	IP67, Only in screwed condition
Connector B	Male, M12 × 1, Straight, D-coded
Number of pins	4
Contacts	Metal, CuZn, Gold-plated
Contact carriers	Plastic, PA, UL 94, Black
Connector body	Plastic, TPU, UL 94, Black
Coupling nut/retaining screw	Brass, GD-Zn, Nickel-plated
Tightening torque	0.4 … 0.6 Nm (observe max. torque of mating connector!)
Mechanical lifespan	> 100 Mating cycles
Pollution degree	3/2
Protection class	IP67, Only when screwed tight
Cable	
Network protocol	Ethernet
Cable diameter	Ø 6.5 mm ± 0.20

Features

- M12 male, straight, D-coded
- M12 male, straight
- Ethernet cable: 4-pin, AWG 22
- CAT 5E
- Jacket material: PUR
- Jacket color: green
- Shield: Aluminum foil overlapped, tinned copper wire
- Jacket diameter: 6.5 mm
- Suitable for drag chain use
- Oil resistant acc. to IEC 60811-2-1 and UL13
- Free from halogen acc. to IEC 60754
- Flame-retardant acc. to IEC 60332-1-2 and UL2556 VW1
- RoHS-compliant
- PNO-compliant

Cable Cross-Section

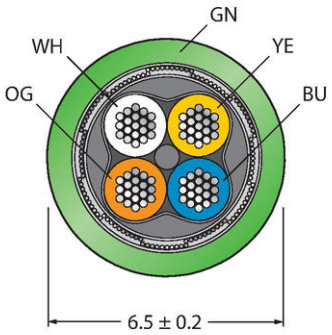

RSSD-RSSD-4416-1M| 05-05-2021 02-09 | Technical modifications reserved

Technical data

Cable length	1 m
Cable jacket	PUR, Green
Shielding	Aluminum foil, tinned copper wire
Core insulation	PE
Core cross-section	4 x 0.32 mm²
Arrangement of strands	7 x 0.25 mm
Core colors	WH, YE, BU, OG
Electrical properties at +20 °C	
Rated voltage	48 V
Test voltage	2000 V
Current	3 A
DC resistance (loop)	120 Ω/km
Nom. impedance	100 Ω (1MHZ)
Nom. capacitance	50 pF/m
Mechanical and chemical properties	
Bending radius (stationary installation)	≥ 5 x Ø
Bending radius (flexible use)	≥ 8 x Ø
Bending cycles	≥ 3 million
Torsional stress	± 180 °/m
Torsion cycles	≤ 100,000
Ambient temperature range (stationary)	-50 °C…+70 °C
Ambient temperature range (In motion)	-20 °C…+60 °C
Other Featues	
Qualified for drag chain use	yes
Halogen-free	yes
PVC-free	yes
UV resistance	yes
Oil-resistant	yes
Flame-retardant	yes

Contact assignment



Kupplung RJ45

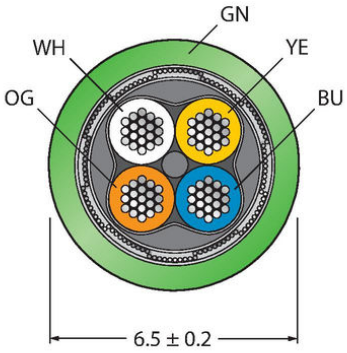

Pin Assignment

Pin Assignment Right

Circuit Diagram

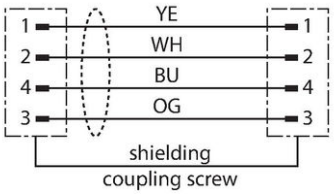

Accessories

TORQUE-WRENCH-SET-BUS	6936171



Torque wrench set; grip with adjustable torque 0.4 to 1.0 Nm; torque wrench set, fork wrench for M8 (SW9), fork wrench for M12 (SW13), fork wrench for M12 (SW14)

RSSD-RSSD-4416-1M| 05-05-2021 02-09 | Technical modifications reserved