OJS200

Through-beam sensor transmitter

OJS-OOKG/SO/AS

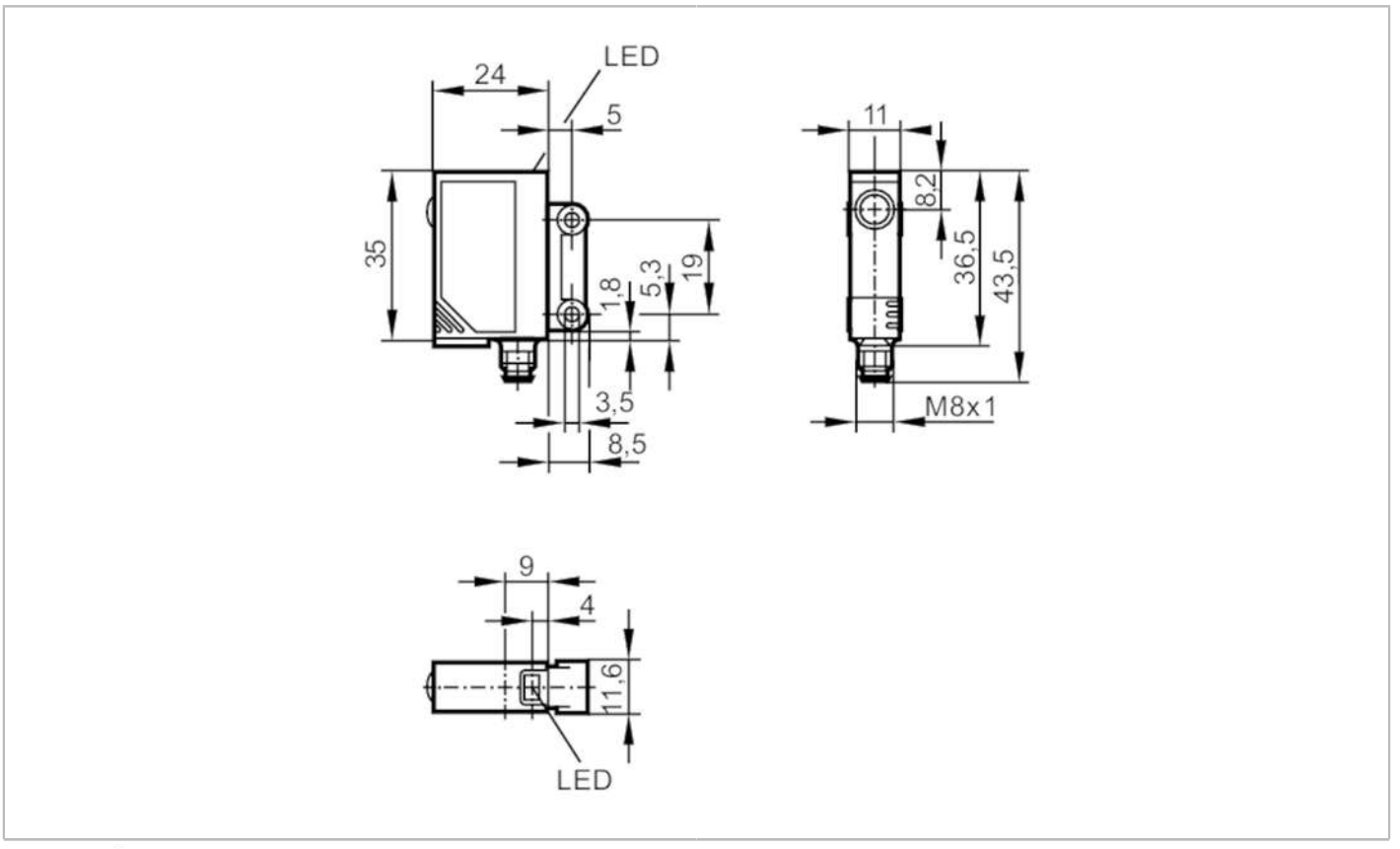

Product characteristics		
Type of light		red light
Housing		rectangular
Application		
Function principle		Through-beam sensor
Electrical data		
Operating voltage	[V]	10...30 DC
Current consumption	[mA]	< 30
Protection class		III
Reverse polarity protection		yes
Type of light		red light
Detection zone		
Transmitter / receiver		transmitter
Range	[m]	0...10
Range adjustable		no
Max. light spot diameter	[mm]	1000
Light spot dimensions refer to		at maximum range
Operating conditions		
Ambient temperature	[°C]	-25...60
Protection		IP 67

OJS200

Through-beam sensor transmitter

OJS-OOKG/SO/AS

Tests / approvals			
EMC		EN 60947-5-2	
MTTF	[years]	2230	
Mechanical data			
Weight	[g]	16.6	
Housing		rectangular	
Dimensions	[mm]	35 x 11 x 24	
Materials		ABS; SEPS	
Lens material		PMMA	
Lens alignment		side lens	
Displays / operating elements			
Display		operation	1 x LED, green
Remarks			
Remarks		operating voltage "supply class 2" according to cULus	
Pack quantity		1 pcs.	

Electrical connection

Connector: 1 x M8; coding: A

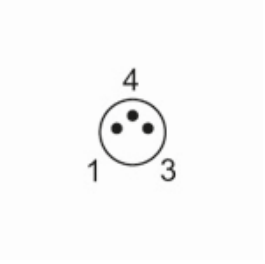

Connection

