EVC242

Connection cable

VDOGF040MSS0001H04STGH040MSS

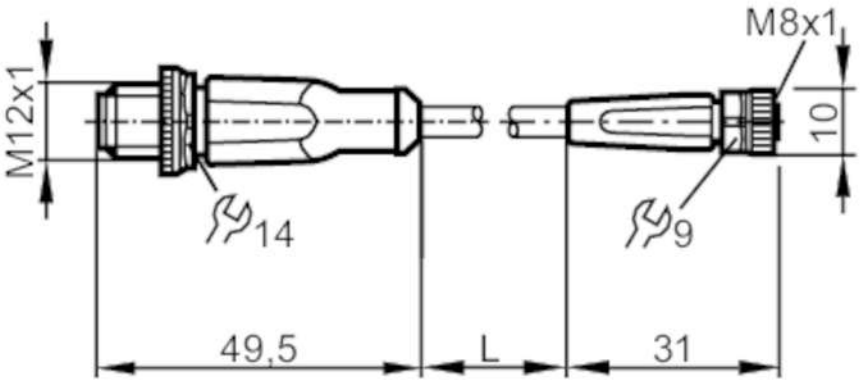

Application						
Free from silicone		yes				
Electrical data						
Operating voltage	[V]	< 50 AC / < 60 DC				
Protection class		III				
Max. current load total	[A]	3				
Operating conditions						
Ambient temperature	[°C]	-25...90				
Note on ambient temperature		cULus: ...75				
Ambient temperature (moving)	[°C]	-25...90				
Note on ambient temperature (moving)		cULus: ...75				
Protection		IP 65; IP 67; IP 68; IP 69K				
Mechanical data						
Weight	[g]	55.6				
Materials		housing: TPU orange; Sealing: FKM				
Material nut		brass / brass				
Drag chain suitability		bending radius for flexible use	min. 10 x cable diameter			
		travel speed	max. 3.3 m/s for a horizontal travel length of 5 m and			

EVC242

Connection cable

VDOGF040MSS0001H04STGH040MSS

		max. acceleration of 5 m/s²			
	bending cycles		> 5 Mio.		
	torsional strain		± 180 °/m		

Remarks

Pack quantity	1 pcs.

Electrical connection

Cable: 1 m, PUR, Halogen-free, black, Ø 4.9 mm; 4 x 0.34 mm² (42 x Ø 0.1 mm)

Electrical connection - socket

Connector: 1 x M8, straight; Locking: , brass, nickel-plated; Kontakte: gold-plated; Tightening torque: 0.3...0.5

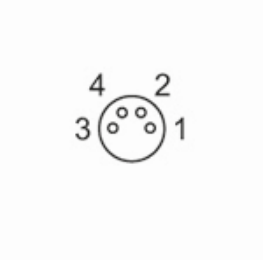

Electrical connection - plug

Connector: 1 x M12, straight; Locking: , brass, nickel-plated; Kontakte: gold-plated; Tightening torque: 0.6...1.5



Connection

