Protistor® size NH 000, 00, 0, 1, 2, 3 aR

690VAC (IEC) / 700VAC (UL)

SEMICONDUCTOR PROTECTION FUSES

NH SQUARE BODY HIGH-SPEED FUSE-LINKS AC PROTECTION



The 690/700V Protistor® fuse-links provide maximum flexibility in equipment design and ultimate protection for today's power conversion equipment. These NH style fuse-links are defined as per DIN 43620/00 for a worldwide acceptance into NH modular system fuse-holders, fuse switch disconnectors for direct installation.

The Protistor® have been engineered to provide state-of-the-art protection for semiconductors: diodes, thyristors, GTO's and IGBT devices. Fuses are assembled with pure silver, die-cut elements embedded in solidified sand, which helps control arcing characteristics for a lower I^2t and high interrupting rating level. All contact surfaces are silver plated and all hardware is non-magnetic.

Each fuse-link can be equipped with a low voltage trip-indicator which can operate a field mountable microswitch.

TECHNICAL DATA OVERVIEW

Voltage AC	690 VAC
Ampere Range (A)	16 ... 1000 A
Size per Standard	NH 000, 00, 0, 1, 2, 3
Speed/Characteristic	aR

FEATURES & BENEFITS

- Multiple body sizes
- aR Class according to VDE 636-23 and IEC 60269-4
- Very low I^2t for improved semiconductor protection
- Ultra fast acting
- Current limiting
- Superior cycling capability
- Indication system with double indicator

APPLICATIONS

- Protection of inverters, UPS systems, motor drives and similar 700V or less equipment.

STANDARDS

- UL/CSA Recognized Component
- IEC 60269-4 Compliance

MERSEN reserves the right to change, update or correct, without notice, any information contained in this datasheet.

PRODUCT RANGE



NH000UD69V200PV

Size 000 aR 690VAC

Catalog number	Item number	Rated voltage AC (IEC)	Rated voltage AC (UL)	Rated current I_n	Pre-arcing I^2t	Clearing I^2t at Rated Voltage	Rated breaking capacity AC	Power dissipation at I_n	Weight	Package
NH000UD69V16PV	P320035	690 V	700 V	16 A	8 A²s	0.05 kA²s	80 kA	2.8 W	0.13 kg	3
NH000UD69V20PV	R320037	690 V	700 V	20 A	15 A²s	0.09 kA²s	80 kA	2.8 W	0.13 kg	3
NH000UD69V25PV	T320039	690 V	700 V	25 A	21 A²s	0.13 kA²s	80 kA	4.2 W	0.13 kg	3
NH000UD69V32PV	Y320043	690 V	700 V	32 A	46 A²s	0.27 kA²s	80 kA	5.5 W	0.13 kg	3
NH000UD69V40PV	C320047	690 V	700 V	40 A	67 A²s	0.4 kA²s	80 kA	5.5 W	0.13 kg	3
NH000UD69V50PV	G320051	690 V	700 V	50 A	110 A²s	0.63 kA²s	80 kA	9.7 W	0.13 kg	3
NH000UD69V63PV	L320055	690 V	700 V	63 A	216 A²s	1.3 kA²s	80 kA	12.5 W	0.13 kg	3
NH000UD69V80PV	Q320059	690 V	700 V	80 A	348 A²s	2 kA²s	80 kA	16.7 W	0.13 kg	3
NH000UD69V100PV	V320063	690 V	700 V	100 A	722 A²s	4.3 kA²s	80 kA	19.4 W	0.13 kg	3
NH000UD69V125PV	X320065	690 V	700 V	125 A	1390 A²s	8.2 kA²s	80 kA	20.8 W	0.13 kg	3
NH000UD69V160PV	B320069	690 V	700 V	160 A	2080 A²s	12.2 kA²s	80 kA	30.5 W	0.13 kg	3
NH000UD69V200PV	D320071	690 V	700 V	200 A	3870 A²s	22.7 kA²s	80 kA	36.1 W	0.13 kg	3
NH000UD69V250PV	H320075	690 V	700 V	250 A	7540 A²s	44.4 kA²s	80 kA	44.1 W	0.13 kg	3
NH000UD50V315PV	M320079	500 V	550 V	315 A	15400 A²s	90.7 kA²s	80 kA	60.2 W	0.13 kg	3



NH00UD69V125PV

Size 00 aR 690VAC

Catalog number	Item number	Rated voltage AC (IEC)	Rated voltage AC (UL)	Rated current I_n	Pre-arcing I^2t	Clearing I^2t at Rated Voltage	Rated breaking capacity AC	Power dissipation at I_n	Weight	Package
NH00UD69V20PV	A320137	690 V	700 V	20 A	16 A²s	0.09 kA²s	170 kA	2.8 W	0.2 kg	3
NH00UD69V25PV	C320139	690 V	700 V	25 A	21 A²s	0.13 kA²s	170 kA	4.2 W	0.2 kg	3
NH00UD69V32PV	G320143	690 V	700 V	32 A	46 A²s	0.27 kA²s	170 kA	5.5 W	0.2 kg	3
NH00UD69V40PV	L320147	690 V	700 V	40 A	67 A²s	0.4 kA²s	170 kA	8.3 W	0.2 kg	3
NH00UD69V50PV	Q320151	690 V	700 V	50 A	110 A²s	0.63 kA²s	170 kA	9.7 W	0.2 kg	3
NH00UD69V63PV	V320155	690 V	700 V	63 A	216 A²s	1.3 kA²s	170 kA	12.5 W	0.2 kg	3
NH00UD69V80PV	Z320159	690 V	700 V	80 A	348 A²s	2 kA²s	170 kA	16.7 W	0.2 kg	3
NH00UD69V100PV	D320163	690 V	700 V	100 A	722 A²s	4.3 kA²s	170 kA	19.4 W	0.2 kg	3
NH00UD69V125PV	F320165	690 V	700 V	125 A	1390 A²s	8.2 kA²s	170 kA	20.8 W	0.2 kg	3
NH00UD69V160PV	K320169	690 V	700 V	160 A	2070 A²s	12.2 kA²s	170 kA	30.5 W	0.2 kg	3
NH00UD69V200PV	M320171	690 V	700 V	200 A	3870 A²s	22.7 kA²s	170 kA	36.1 W	0.2 kg	3
NH00UD69V250PV	R320175	690 V	700 V	250 A	7540 A²s	44.4 kA²s	170 kA	44.4 W	0.2 kg	3
NH00UD69V315PV	W320179	690 V	700 V	315 A	15400 A²s	90.7 kA²s	170 kA	60 W	0.2 kg	3

MERSEN reserves the right to change, update or correct, without notice, any information contained in this datasheet.

PRODUCT RANGE



NH0UD69V315PV

Size 0 aR 690VAC

Catalog number	Item number	Rated voltage AC (IEC)	Rated voltage AC (UL)	Rated current I_n	Pre-arcing I^2t	Clearing I^2t at Rated Voltage	Rated breaking capacity AC	Power dissipation at I_n	Weight	Package
NH0UD69V32PV	Q320243	690 V	700 V	32 A	32 A²s	0.17 kA²s	170 kA	19.4 W	0.27 kg	3
NH0UD69V40PV	V320247	690 V	700 V	40 A	54 A²s	0.28 kA²s	170 kA	20.8 W	0.27 kg	3
NH0UD69V50PV	Z320251	690 V	700 V	50 A	87 A²s	0.47 kA²s	170 kA	20.8 W	0.27 kg	3
NH0UD69V63PV	D320255	690 V	700 V	63 A	128 A²s	0.7 kA²s	170 kA	23.6 W	0.27 kg	3
NH0UD69V80PV	H320259	690 V	700 V	80 A	184 A²s	0.97 kA²s	170 kA	25 W	0.27 kg	3
NH0UD69V100PV	M320263	690 V	700 V	100 A	392 A²s	2.08 kA²s	170 kA	30.5 W	0.27 kg	3
NH0UD69V125PV	P320265	690 V	700 V	125 A	722 A²s	3.89 kA²s	170 kA	36.1 W	0.27 kg	3
NH0UD69V160PV	T320269	690 V	700 V	160 A	1550 A²s	8.32 kA²s	170 kA	44.4 W	0.27 kg	3
NH0UD69V200PV	W320271	690 V	700 V	200 A	2950 A²s	15.9 kA²s	170 kA	54.2 W	0.27 kg	3
NH0UD69V250PV	A320275	690 V	700 V	250 A	5580 A²s	29.9 kA²s	170 kA	66.7 W	0.27 kg	3
NH0UD69V315PV	E320279	690 V	700 V	315 A	11600 A²s	62.3 kA²s	170 kA	80 W	0.27 kg	3



NH1UD69V315PV

Size 1 aR 690VAC

Catalog number	Item number	Rated voltage AC (IEC)	Rated voltage AC (UL)	Rated current I_n	Pre-arcing I^2t	Clearing I^2t at Rated Voltage	Rated breaking capacity AC	Power dissipation at I_n	Weight	Package
NH1UD69V63PV	M320355	690 V	700 V	63 A	128 A²s	0.7 kA²s	170 kA	36.1 W	0.42 kg	3
NH1UD69V80PV	K320399	690 V	700 V	80 A	216 A²s	1.17 kA²s	170 kA	43 W	0.42 kg	3
NH1UD69V100PV	W320363	690 V	700 V	100 A	288 A²s	1.57 kA²s	170 kA	45.8 W	0.42 kg	3
NH1UD69V125PV	Y320365	690 V	700 V	125 A	620 A²s	3.32 kA²s	170 kA	53 W	0.42 kg	3
NH1UD69V160PV	C320369	690 V	700 V	160 A	1170 A²s	6.27 kA²s	170 kA	58 W	0.42 kg	3
NH1UD69V200PV	E320371	690 V	700 V	200 A	2480 A²s	13.3 kA²s	170 kA	66.7 W	0.42 kg	3
NH1UD69V250PV	J320375	690 V	700 V	250 A	4690 A²s	25.1 kA²s	170 kA	75 W	0.42 kg	3
NH1UD69V315PV	N320379	690 V	700 V	315 A	9580 A²s	51.4 kA²s	170 kA	83 W	0.42 kg	3
NH1UD69V350PV	P320380	690 V	700 V	350 A	13500 A²s	72.3 kA²s	170 kA	89 W	0.42 kg	3
NH1UD69V400PV	S320383	690 V	700 V	400 A	19500 A²s	105 kA²s	170 kA	97 W	0.42 kg	3

MERSEN reserves the right to change, update or correct, without notice, any information contained in this datasheet.

PRODUCT RANGE



NH2UD69V500PV

Size 2

Catalog number	Item number	Rated voltage AC (IEC)	Rated voltage AC (UL)	Rated current I_n	Pre-arcing I^2t	Clearing I^2t at Rated Voltage	Rated breaking capacity AC	Power dissipation at I_n	Weight	Package
NH2UD69V160PV	L320469	690 V	700 V	160 A	968 A²s	5.18 kA²s	170 kA	75 W	0.62 kg	3
NH2UD69V200PV	N320471	690 V	700 V	200 A	1710 A²s	9.22 kA²s	170 kA	83 W	0.62 kg	3
NH2UD69V250PV	S320475	690 V	700 V	250 A	3500 A²s	18.7 kA²s	170 kA	93 W	0.62 kg	3
NH2UD69V315PV	X320479	690 V	700 V	315 A	6870 A²s	36.9 kA²s	170 kA	108 W	0.62 kg	3
NH2UD69V350PV	Y320480	690 V	700 V	350 A	9580 A²s	51.4 kA²s	170 kA	116 W	0.62 kg	3
NH2UD69V400PV	B320483	690 V	700 V	400 A	13500 A²s	72.3 kA²s	170 kA	125 W	0.62 kg	3
NH2UD69V450PV	D320485	690 V	700 V	450 A	21000 A²s	113 kA²s	170 kA	139 W	0.62 kg	3
NH2UD69V500PV	F320487	690 V	700 V	500 A	27500 A²s	147 kA²s	170 kA	147 W	0.62 kg	3
NH2UD69V550PV	G320488	690 V	700 V	550 A	38400 A²s	206 kA²s	170 kA	155 W	0.62 kg	3
NH2UD69V630PV	H320489	690 V	700 V	630 A	58600 A²s	315 kA²s	170 kA	169 W	0.62 kg	3
NH2UD69V700PV	J320490	690 V	700 V	700 A	78100 A²s	420 kA²s	170 kA	175 W	0.62 kg	3



NH3UD69V700PV

Size 3 aR 690VAC

Catalog number	Item number	Rated voltage AC (IEC)	Rated voltage AC (UL)	Rated current I_n	Pre-arcing I^2t	Clearing I^2t at Rated Voltage	Rated breaking capacity AC	Power dissipation at I_n	Weight	Package
NH3UD69V315PV	F320579	690 V	700 V	315 A	5240 A²s	28.2 kA²s	170 kA	113 W	1.05 kg	1
NH3UD69V350PV	G320580	690 V	700 V	350 A	7540 A²s	40.6 kA²s	170 kA	117 W	1.05 kg	1
NH3UD69V400PV	K320583	690 V	700 V	400 A	10500 A²s	56.5 kA²s	170 kA	130 W	1.05 kg	1
NH3UD69V450PV	M320585	690 V	700 V	450 A	15700 A²s	84.3 kA²s	170 kA	139 W	1.05 kg	1
NH3UD69V500PV	P320587	690 V	700 V	500 A	22200 A²s	119 kA²s	170 kA	150 W	1.05 kg	1
NH3UD69V550PV	Q320588	690 V	700 V	550 A	30300 A²s	163 kA²s	170 kA	160 W	1.05 kg	1
NH3UD69V630PV	R320589	690 V	700 V	630 A	42100 A²s	226 kA²s	170 kA	175 W	1.05 kg	1
NH3UD69V700PV	S320590	690 V	700 V	700 A	61700 A²s	332 kA²s	170 kA	200 W	1.05 kg	1
NH3UD69V800PV	T320591	690 V	700 V	800 A	88900 A²s	478 kA²s	170 kA	220 W	1.05 kg	1
NH3UD69V900PV	V320592	690 V	700 V	900 A	124000 A²s	666 kA²s	170 kA	250 W	1.05 kg	1
NH3UD69V1000PV	W320593	690 V	700 V	1000 A	178000 A²s	959 kA²s	170 kA	280 W	1.05 kg	1

MERSEN reserves the right to change, update or correct, without notice, any information contained in this datasheet.

TIME CURRENT CHARACTERISTIC CURVES

Size 000

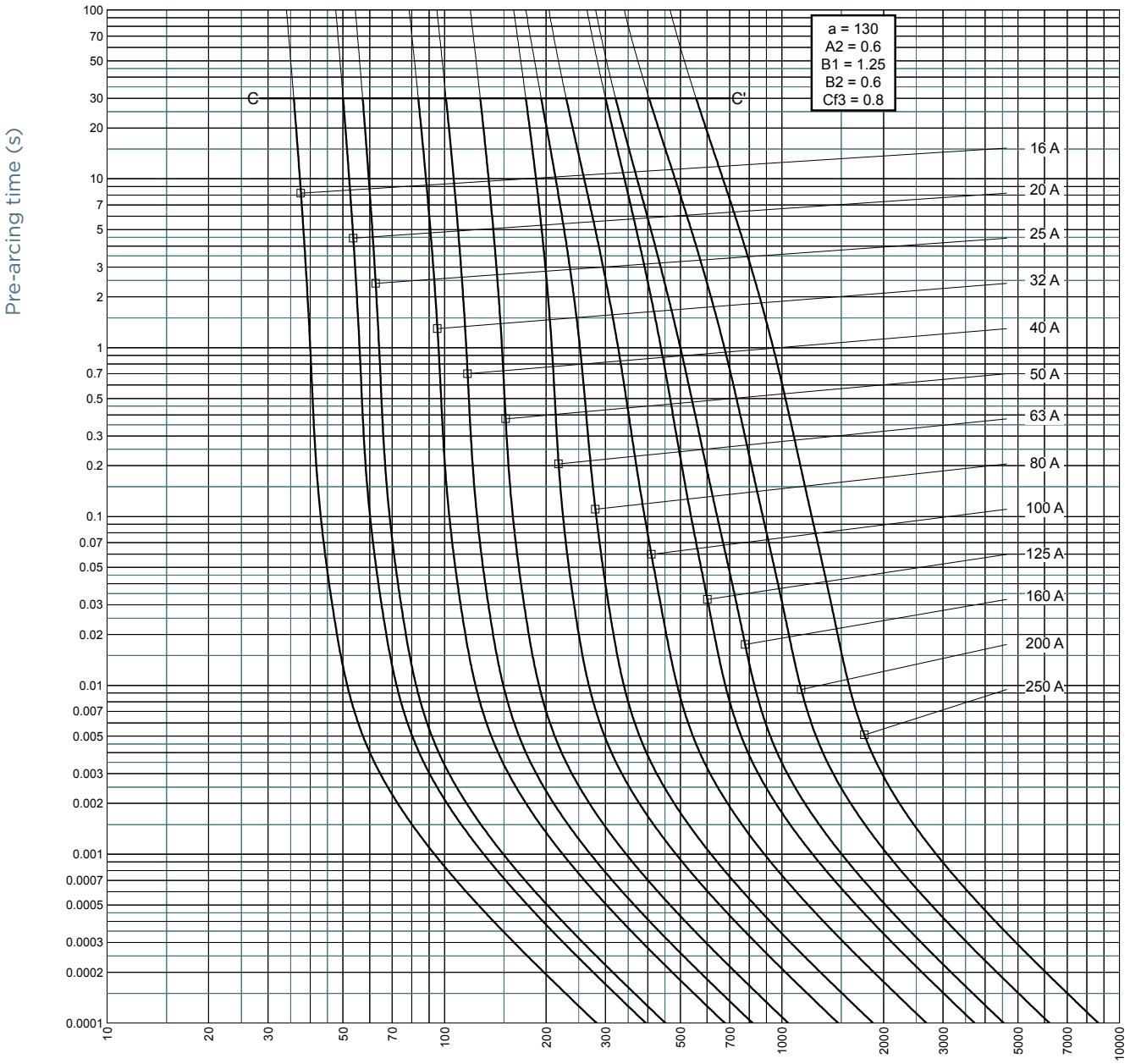

MERSEN reserves the right to change, update or correct, without notice, any information contained in this datasheet.

TIME CURRENT CHARACTERISTIC CURVES

Size 00

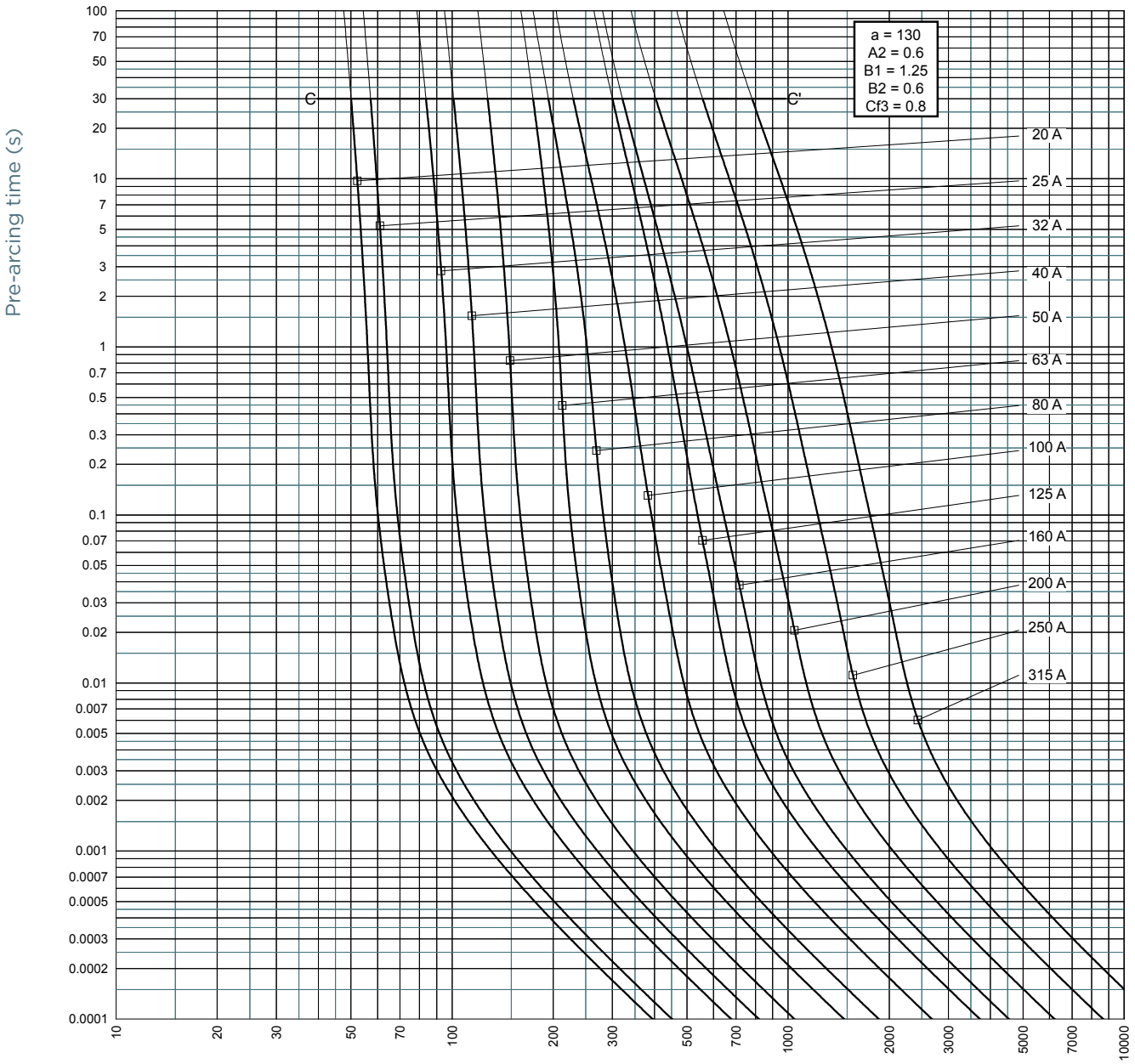

MERSEN reserves the right to change, update or correct, without notice, any information contained in this datasheet.

TIME CURRENT CHARACTERISTIC CURVES

Size 0

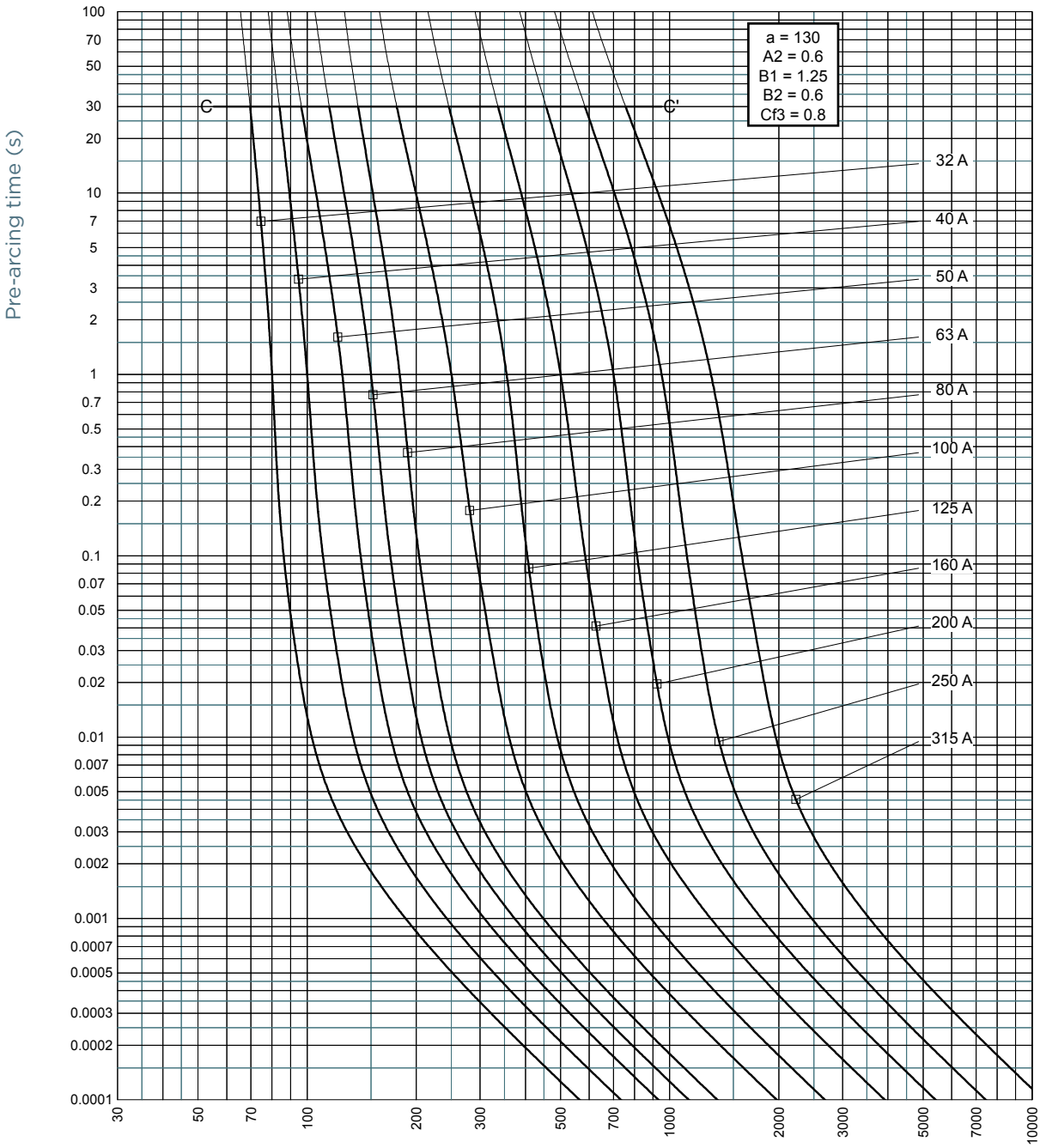

MERSEN reserves the right to change, update or correct, without notice, any information contained in this datasheet.

TIME CURRENT CHARACTERISTIC CURVES

Size 1

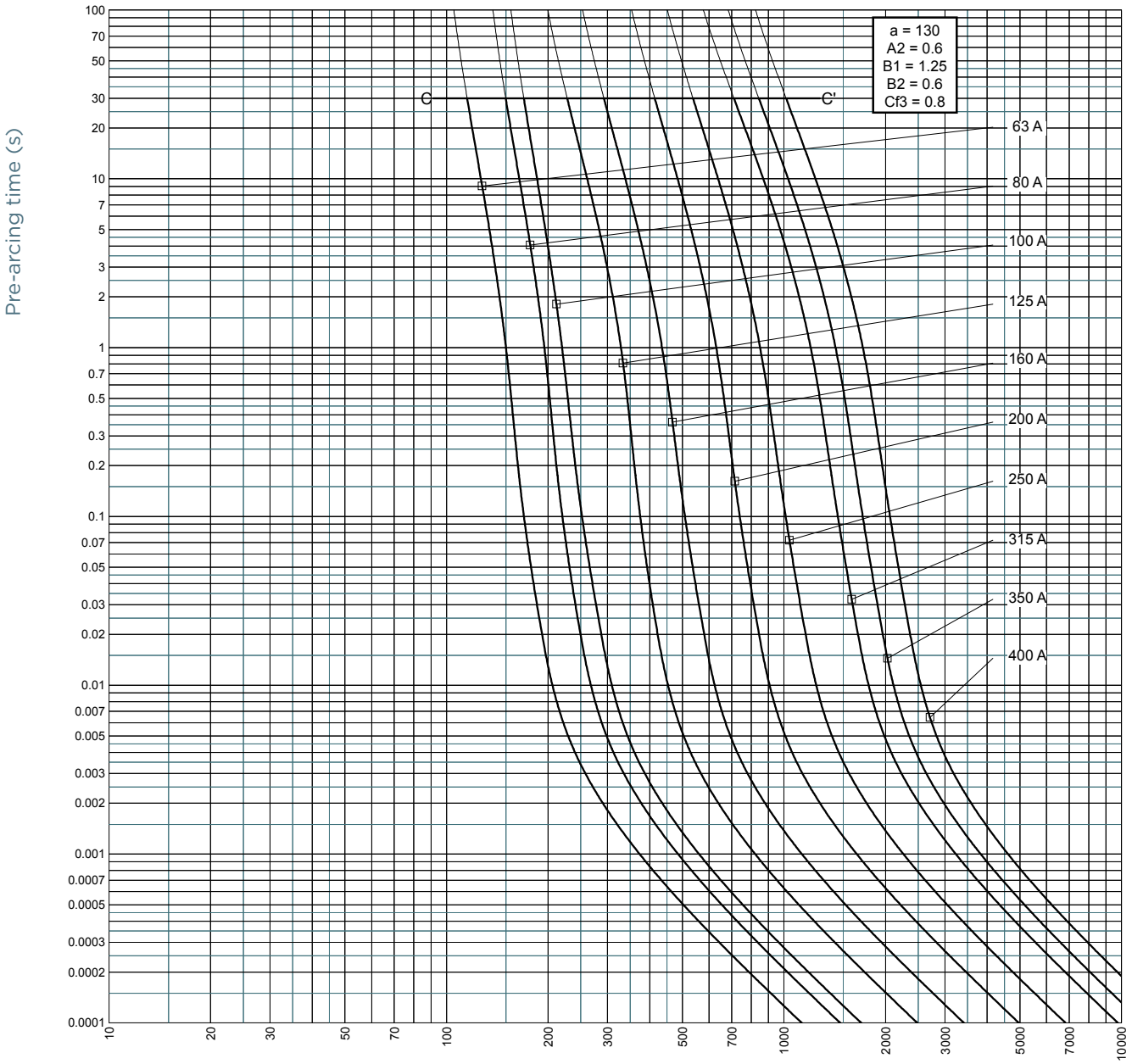

MERSEN reserves the right to change, update or correct, without notice, any information contained in this datasheet.

TIME CURRENT CHARACTERISTIC CURVES

Size 2

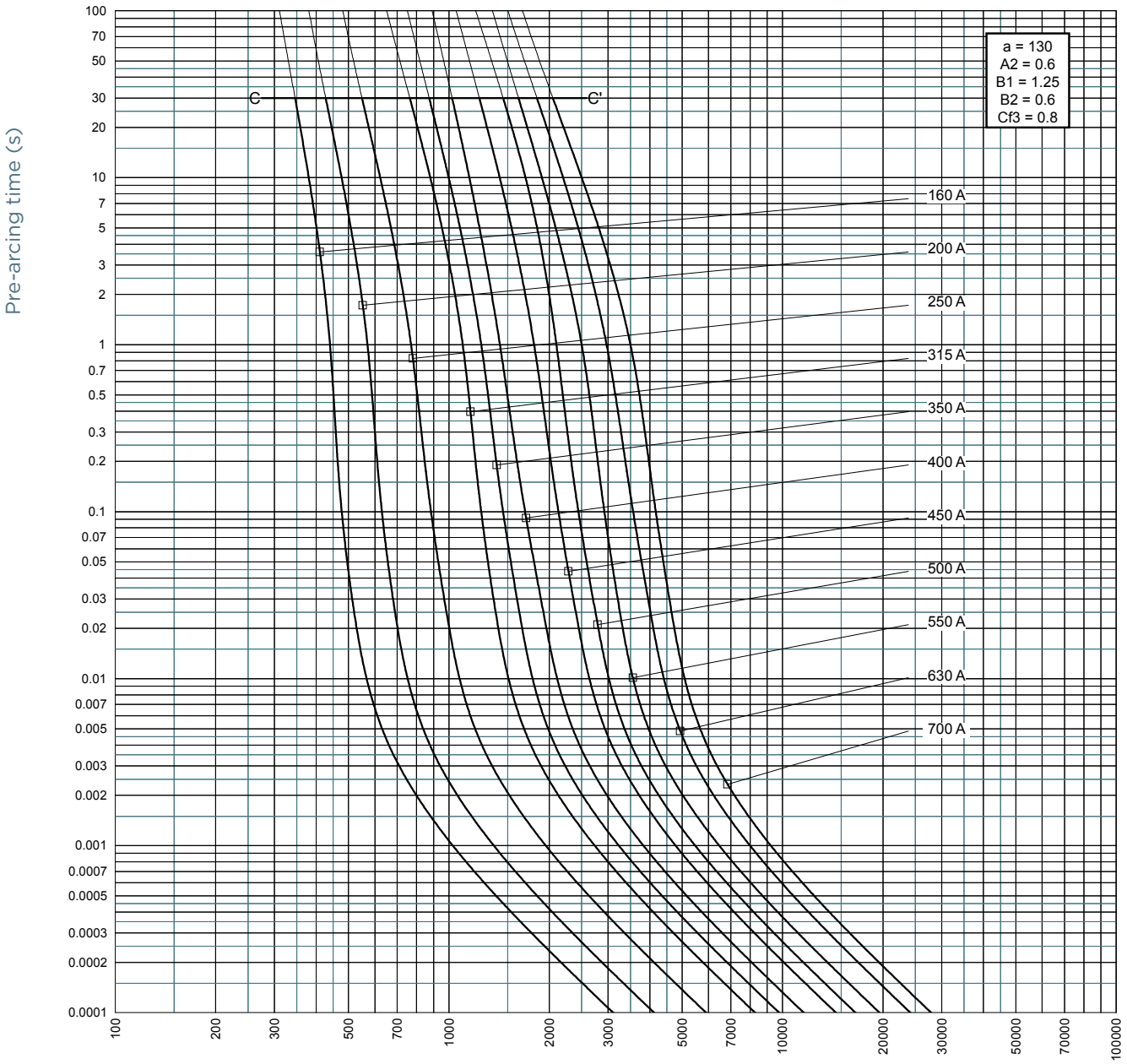

MERSEN reserves the right to change, update or correct, without notice, any information contained in this datasheet.

TIME CURRENT CHARACTERISTIC CURVES

Size 3

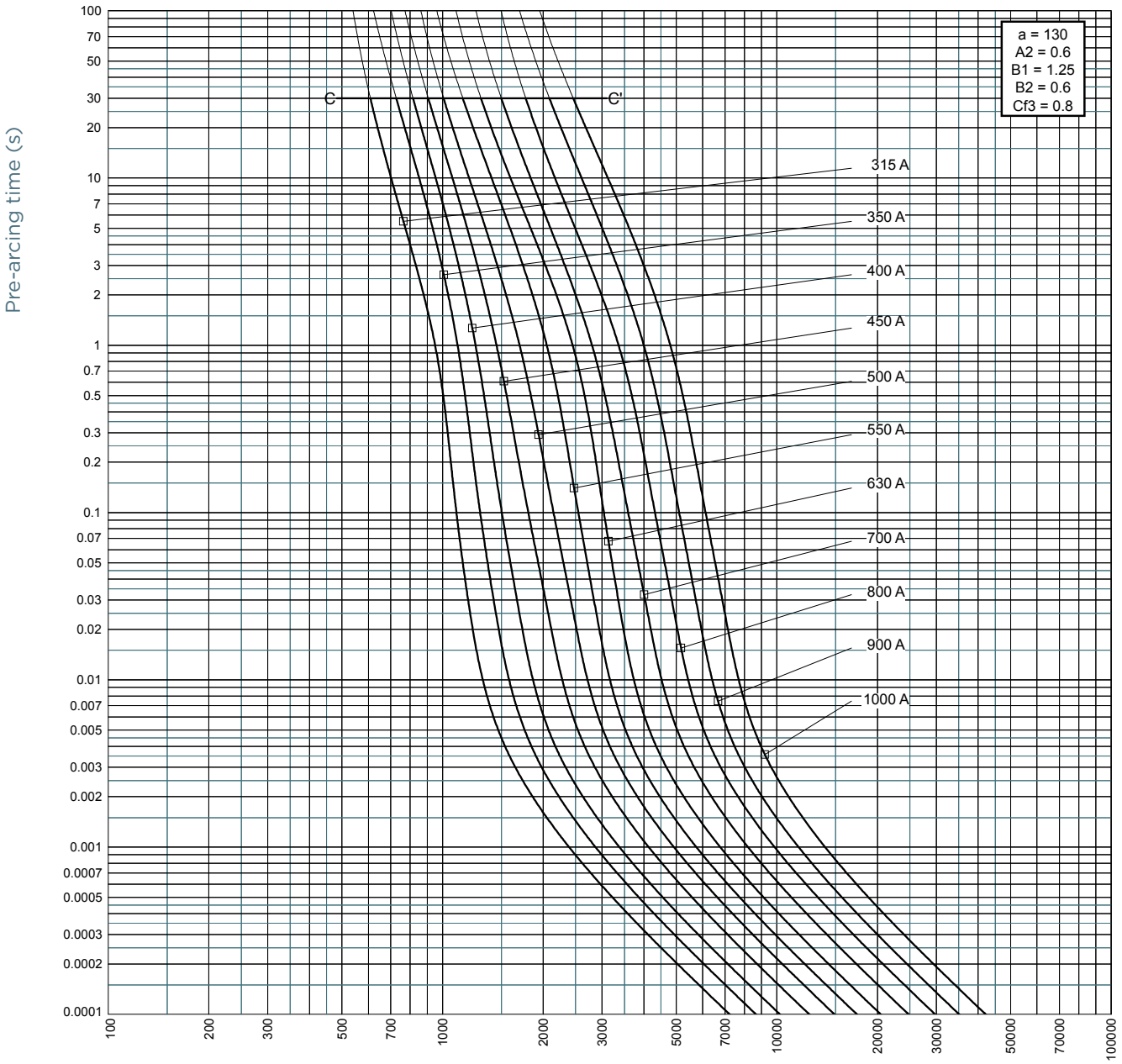

MERSEN reserves the right to change, update or correct, without notice, any information contained in this datasheet.

CUT-OFF CURRENT CHARACTERISTIC

Size 000

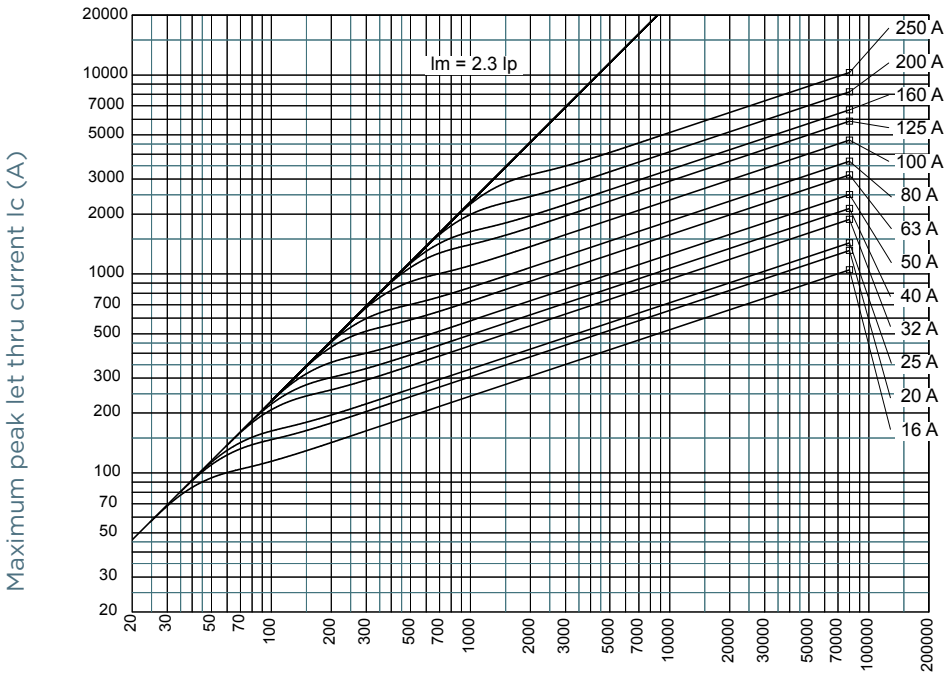

Size 00

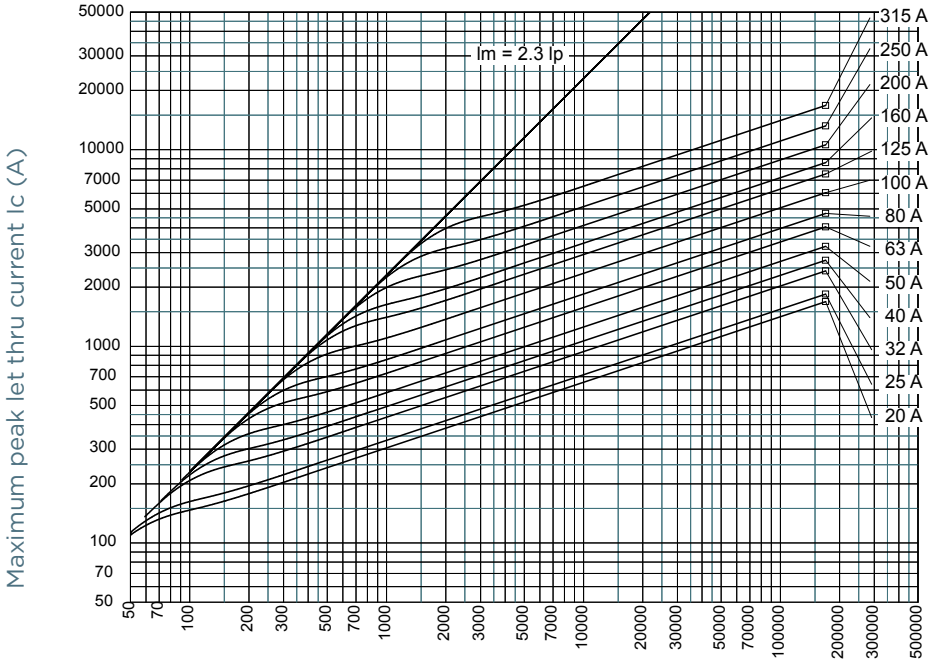

MERSEN reserves the right to change, update or correct, without notice, any information contained in this datasheet.

CUT-OFF CURRENT CHARACTERISTIC

Size 0

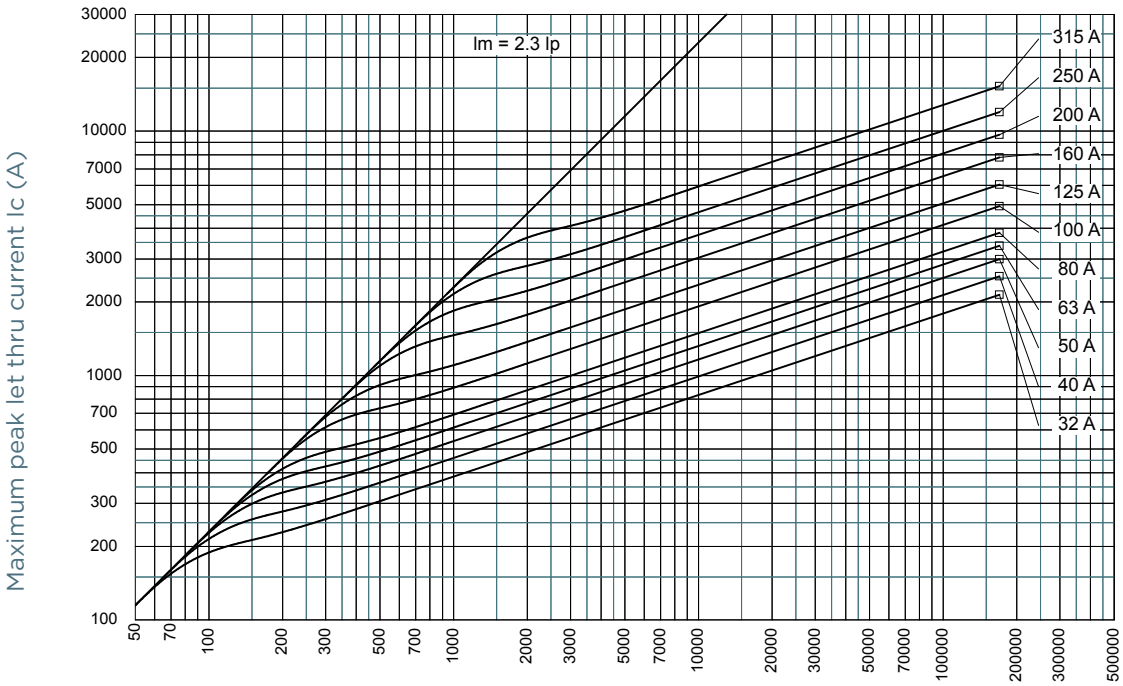

Size 1

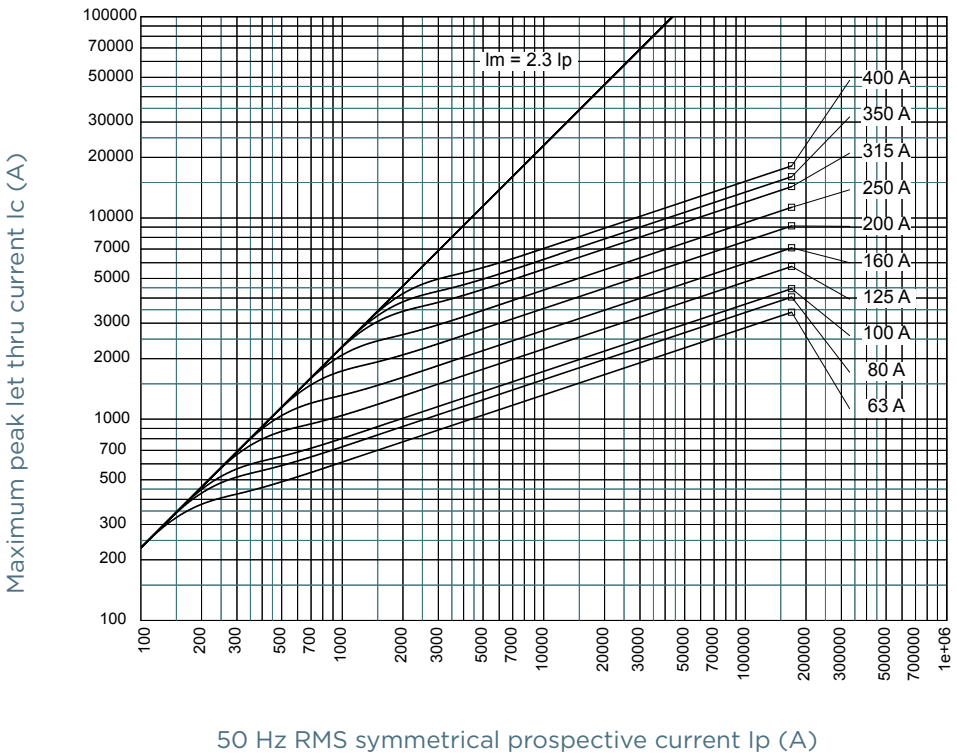

MERSEN reserves the right to change, update or correct, without notice, any information contained in this datasheet.

CUT-OFF CURRENT CHARACTERISTIC

Size 2

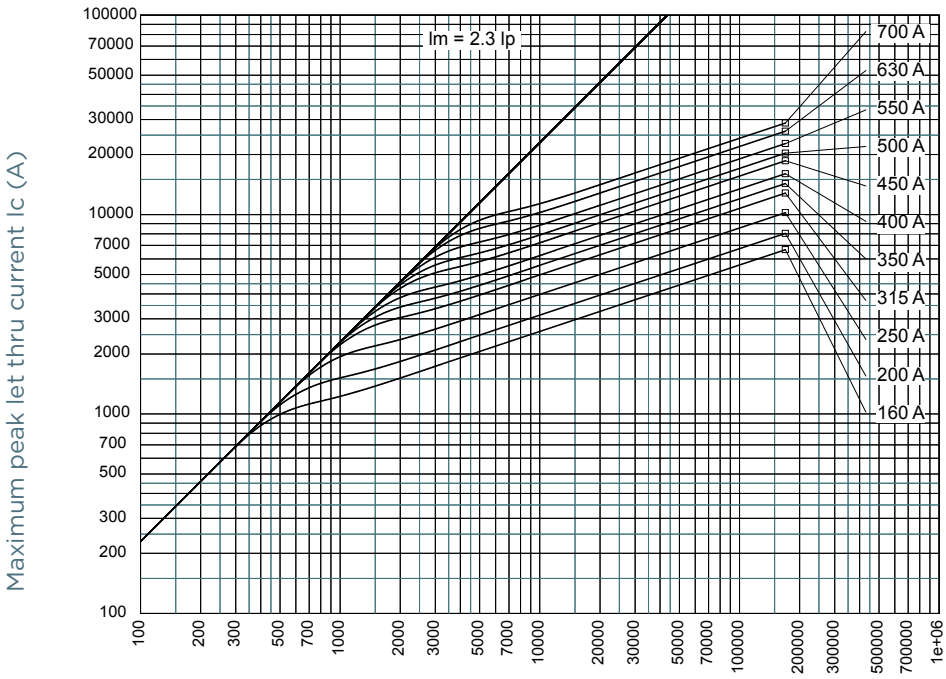

Size 3

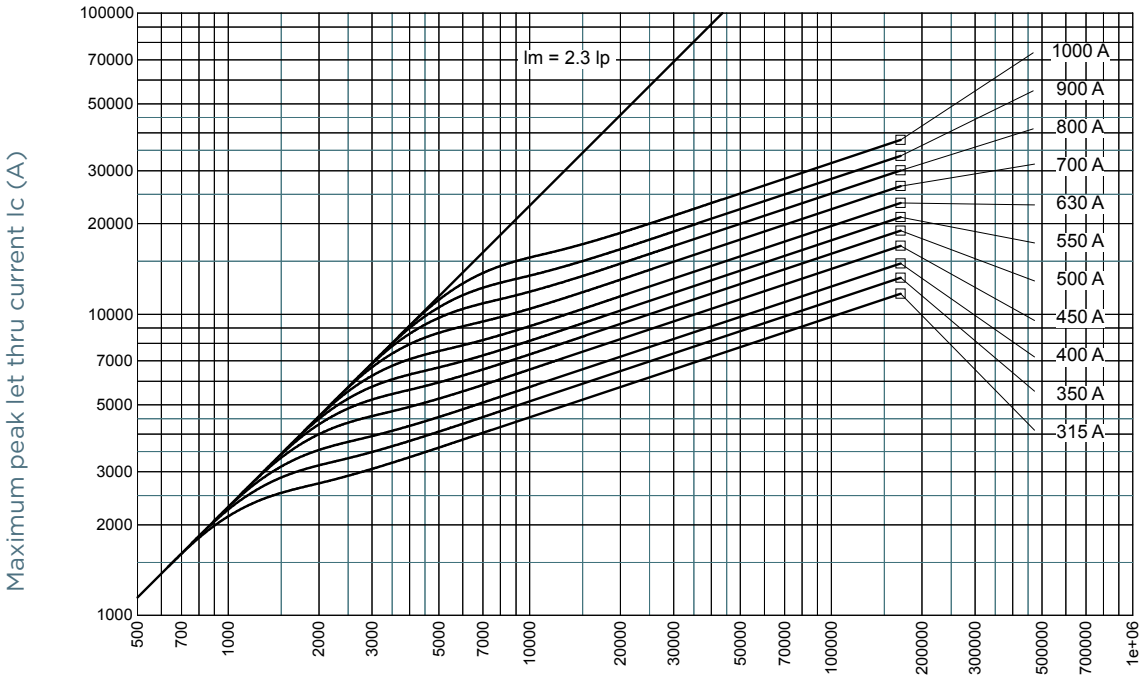

MERSEN reserves the right to change, update or correct, without notice, any information contained in this datasheet.

I^2T MULTIPLIER COEFFICIENT

Size 000

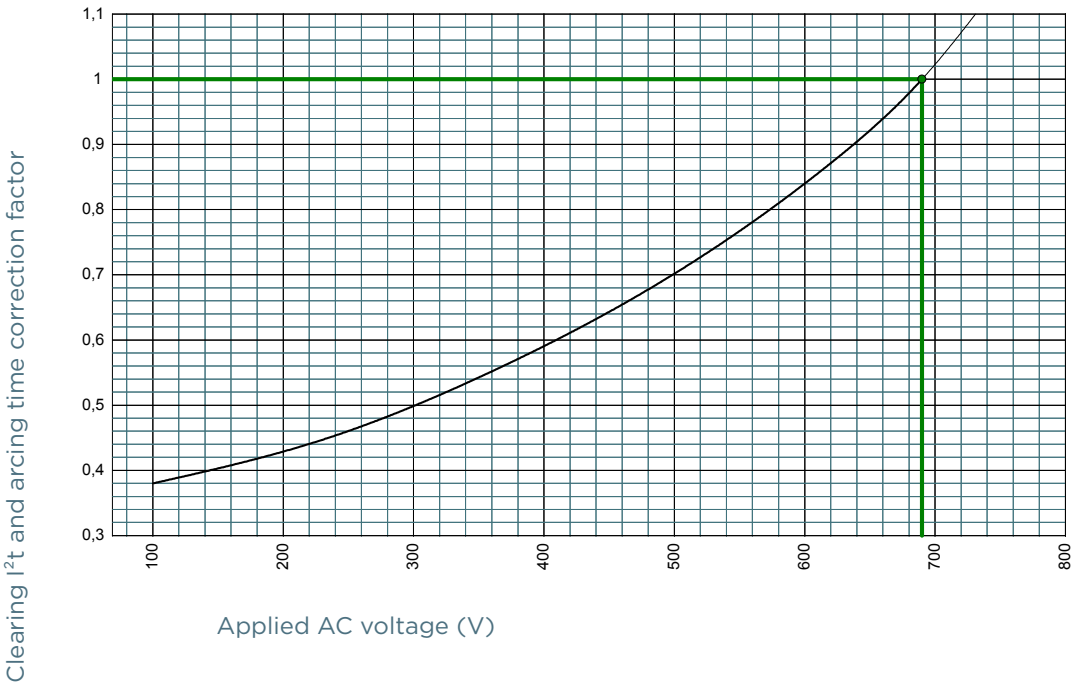

Size 00

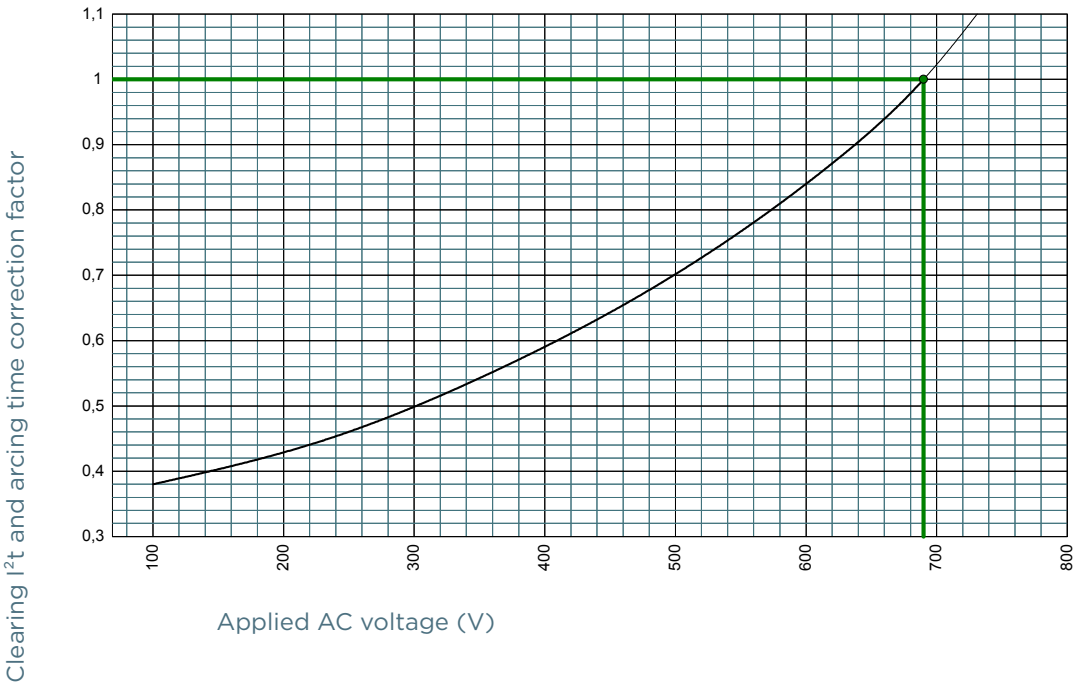

MERSEN reserves the right to change, update or correct, without notice, any information contained in this datasheet.

I^2T MULTIPLIER COEFFICIENT

Size 0

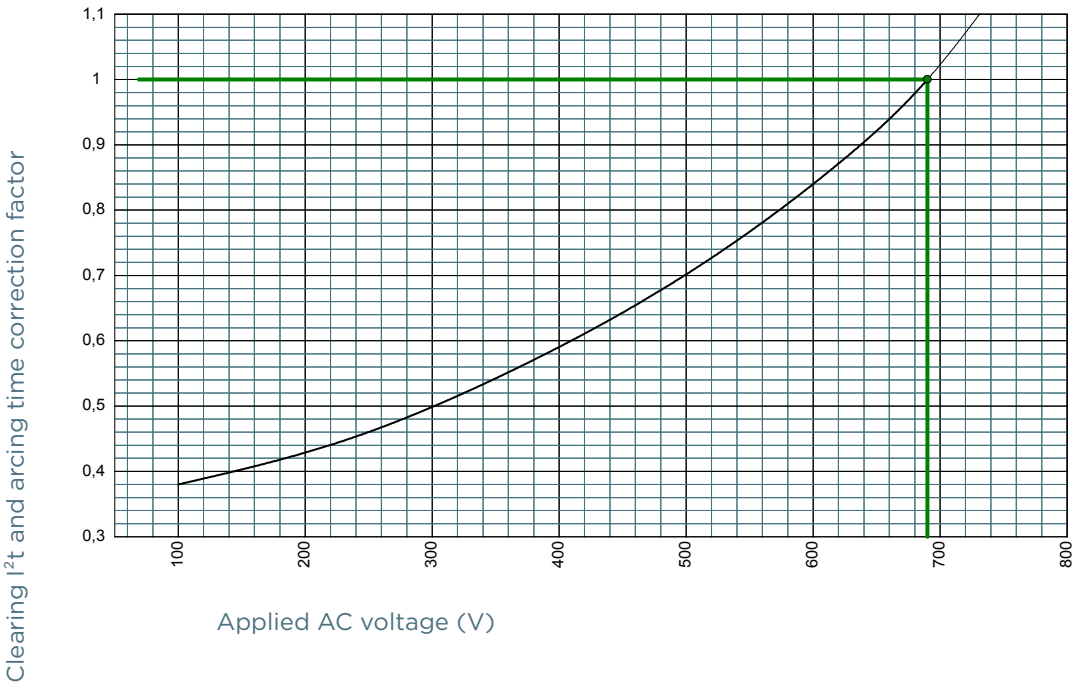

Size 1

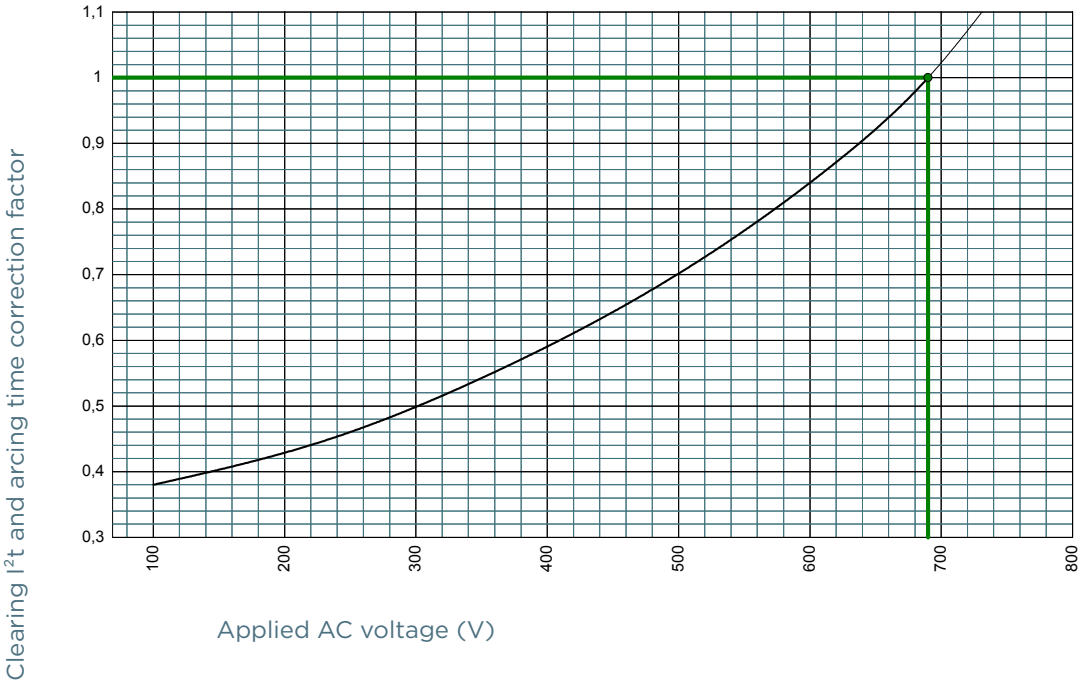

MERSEN reserves the right to change, update or correct, without notice, any information contained in this datasheet.

I²T MULTIPLIER COEFFICIENT

Size 2

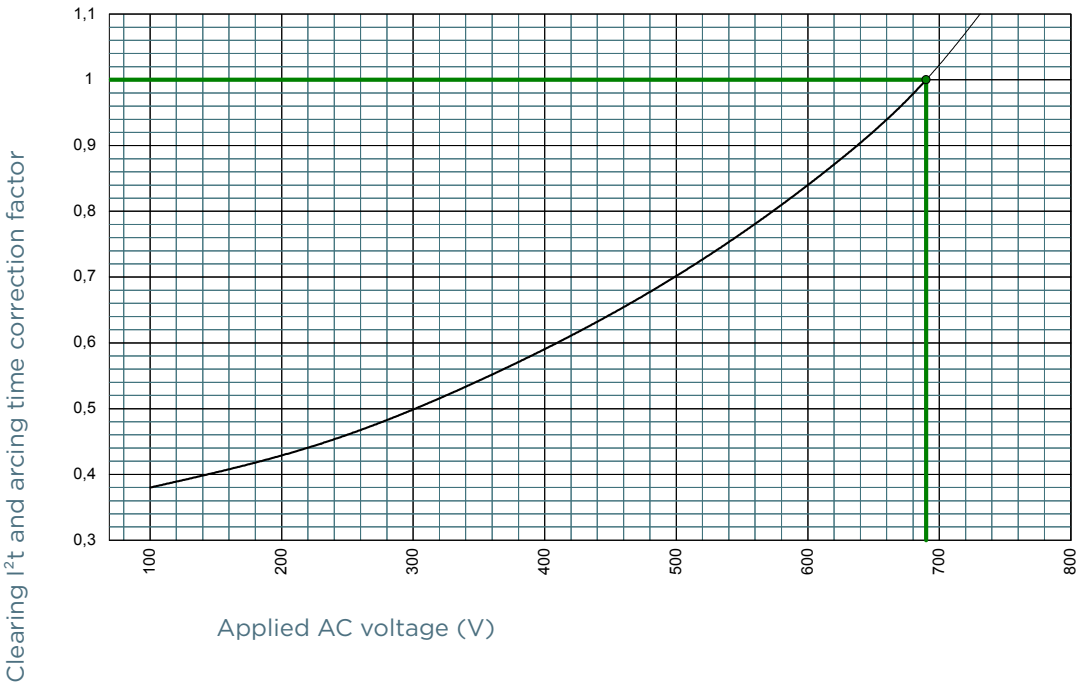

Size 3

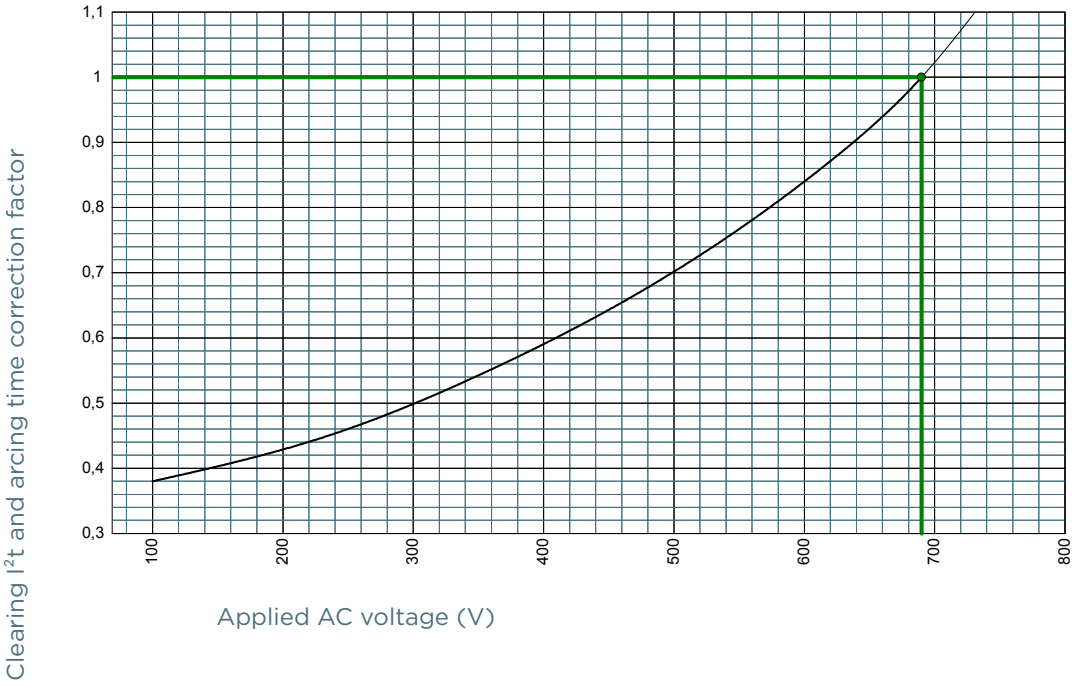

MERSEN reserves the right to change, update or correct, without notice, any information contained in this datasheet.

CHARACTERISTICS TOTAL I^2T CURVE

Size 000

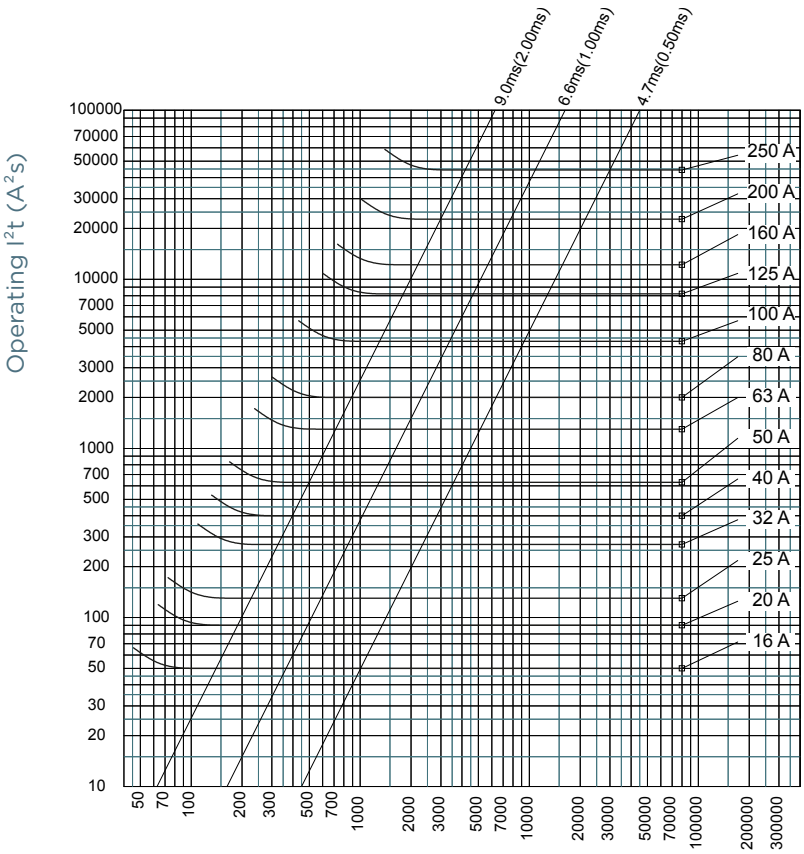

50Hz RMS symetrical prospective current (Ip)(A)

MERSEN reserves the right to change, update or correct, without notice, any information contained in this datasheet.

CHARACTERISTICS TOTAL I^2T CURVE

Size 00

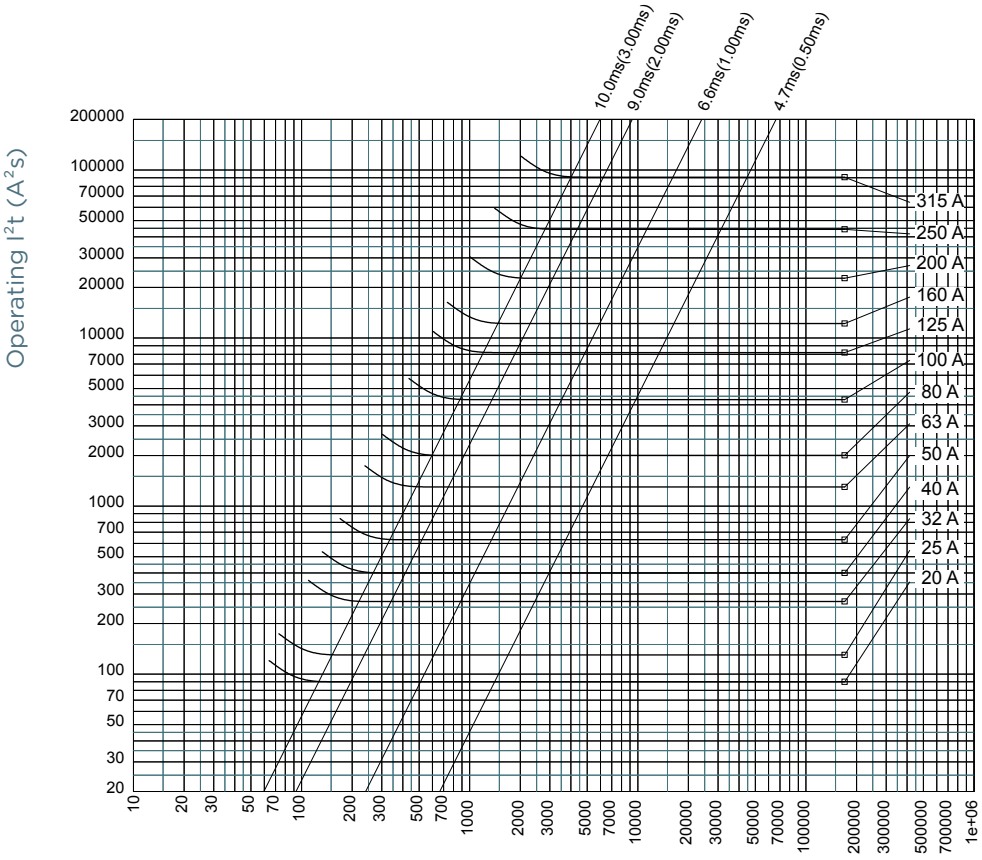

MERSEN reserves the right to change, update or correct, without notice, any information contained in this datasheet.

CHARACTERISTICS TOTAL I^2T CURVE

Size 0

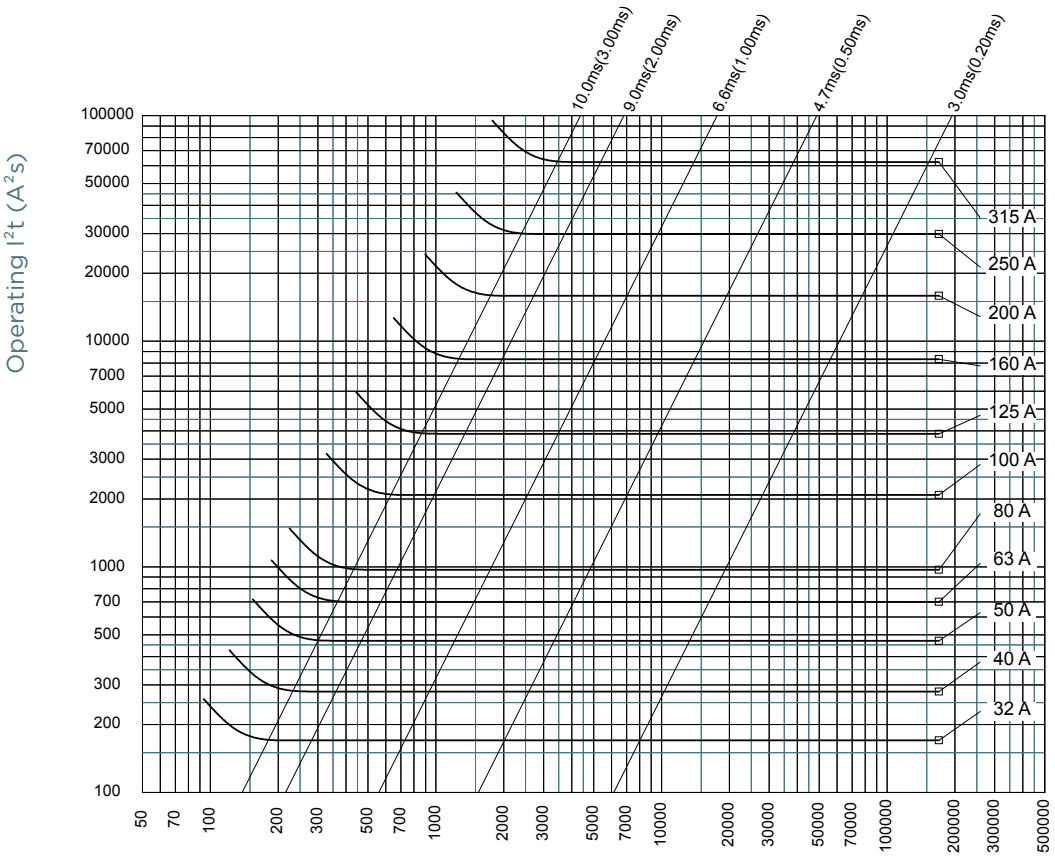

MERSEN reserves the right to change, update or correct, without notice, any information contained in this datasheet.

CHARACTERISTICS TOTAL I^2T CURVE

Size 1

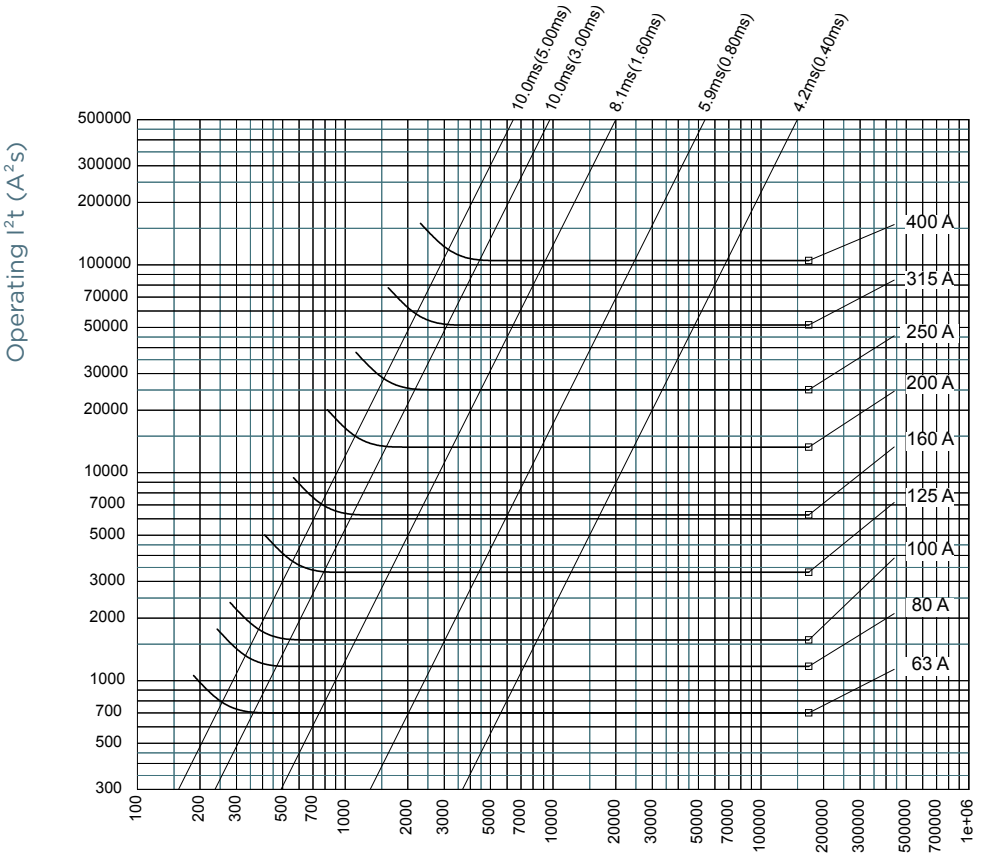

MERSEN reserves the right to change, update or correct, without notice, any information contained in this datasheet.

CHARACTERISTICS TOTAL I^2T CURVE

Size 2

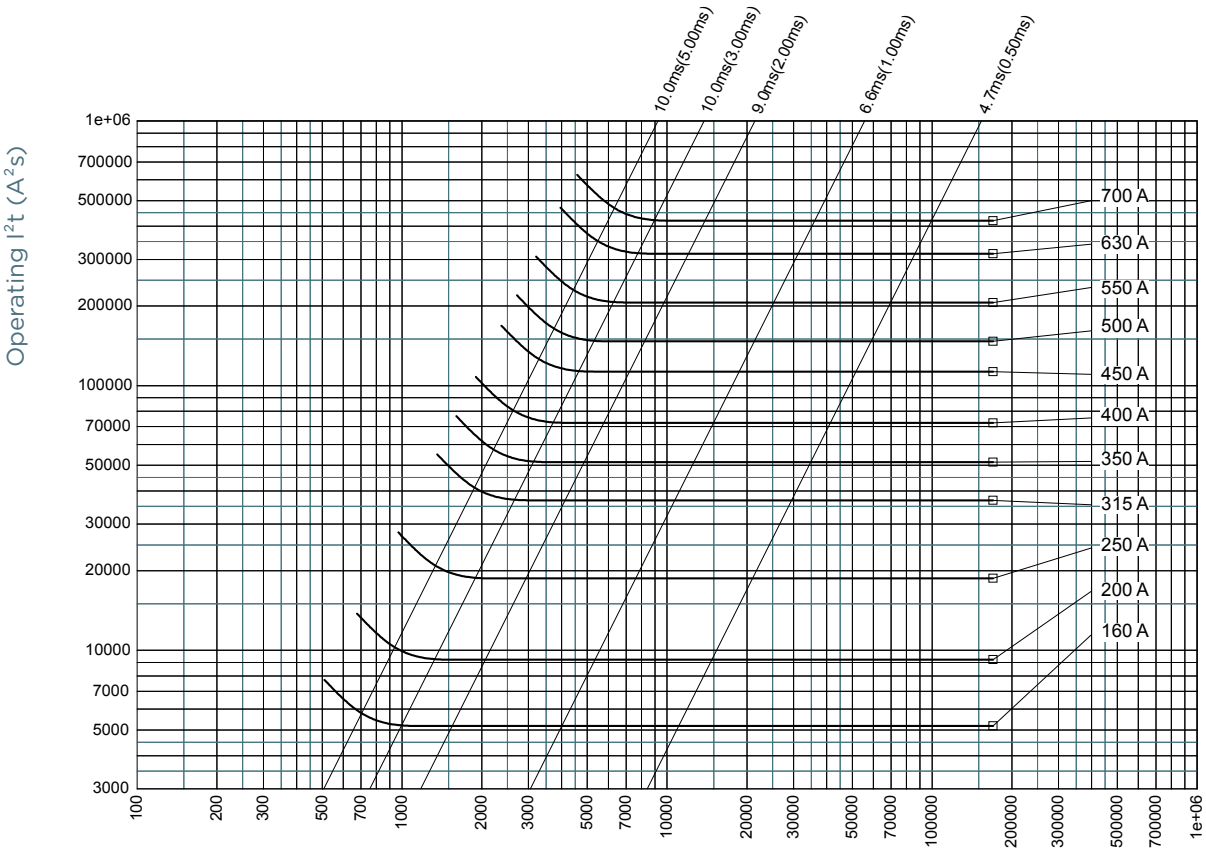

MERSEN reserves the right to change, update or correct, without notice, any information contained in this datasheet.

CHARACTERISTICS TOTAL I^2T CURVE

Size 3

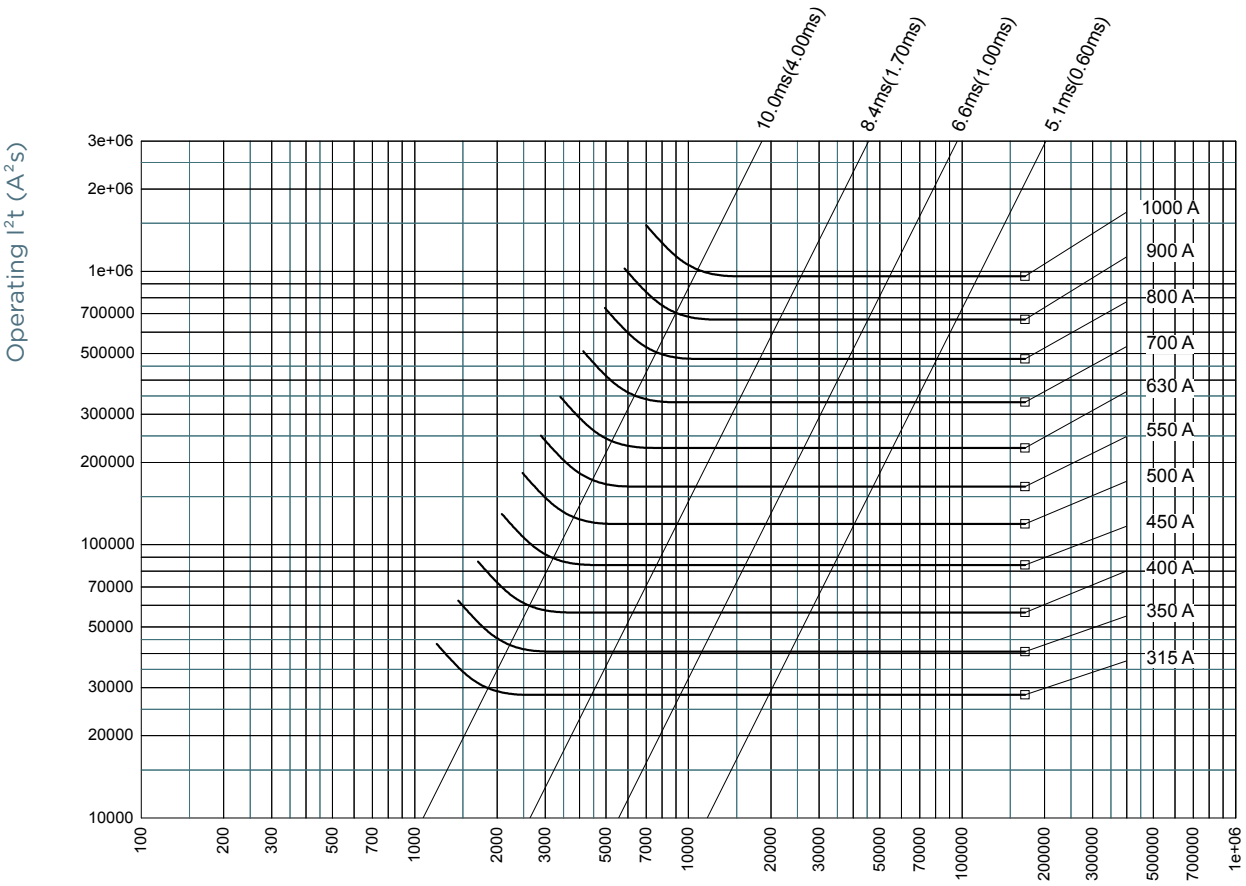

MERSEN reserves the right to change, update or correct, without notice, any information contained in this datasheet.

POWER DISSIPATION

Sizes 000, 00, 0, 1, 2, 3

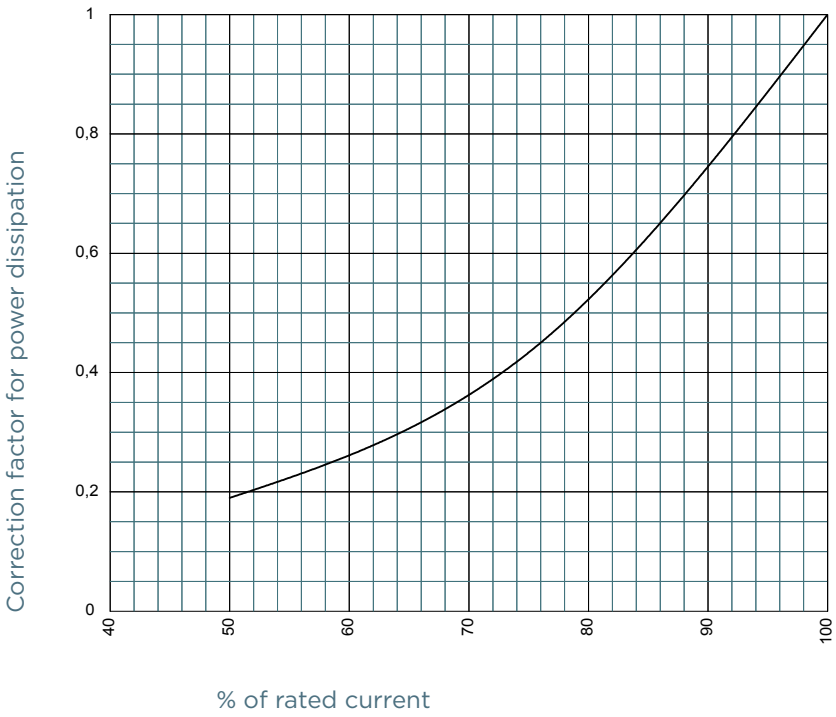

PEAK ARC VOLTAGE

Size 000

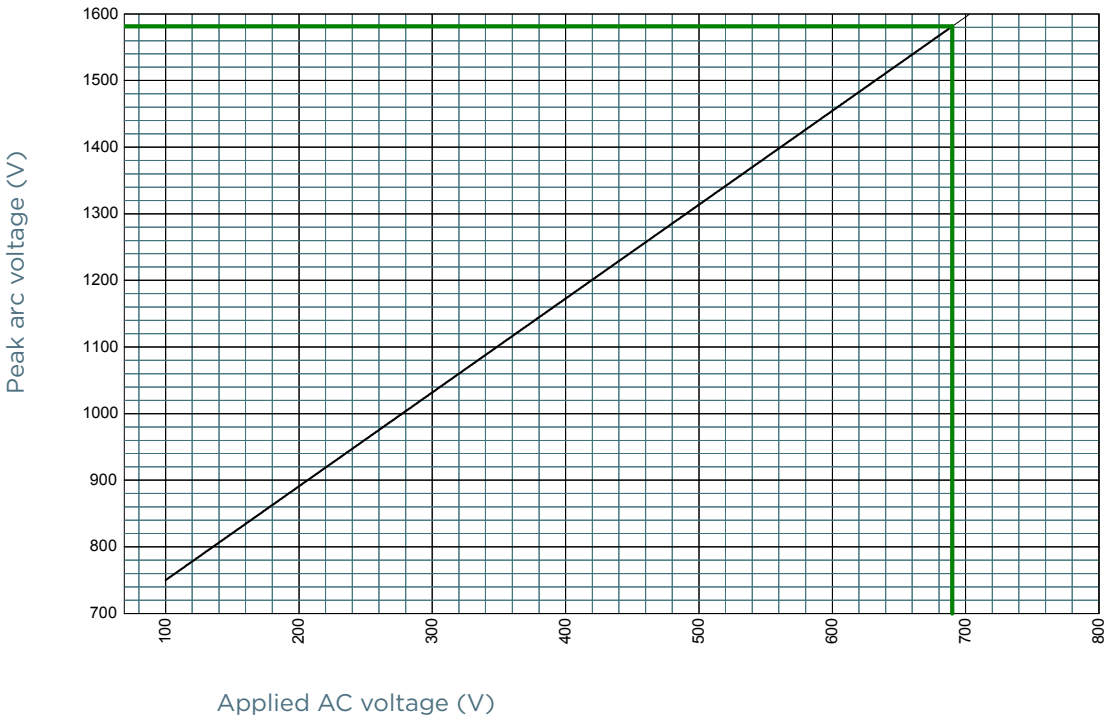

MERSEN reserves the right to change, update or correct, without notice, any information contained in this datasheet.

PEAK ARC VOLTAGE

Size 00

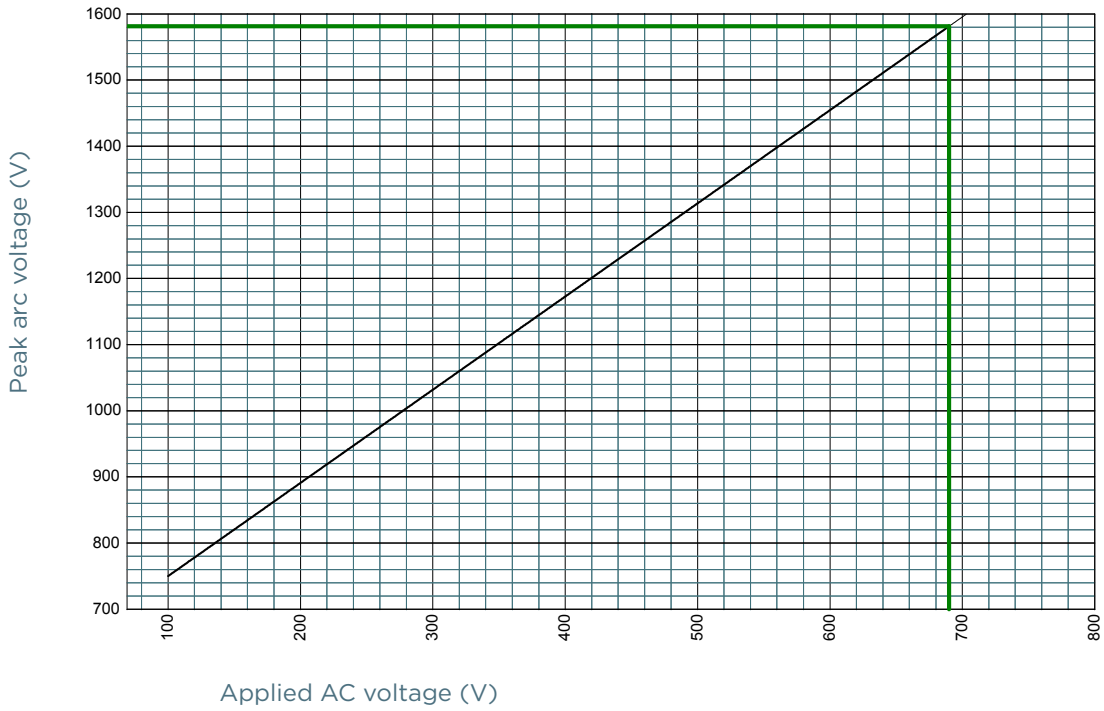

Size 0

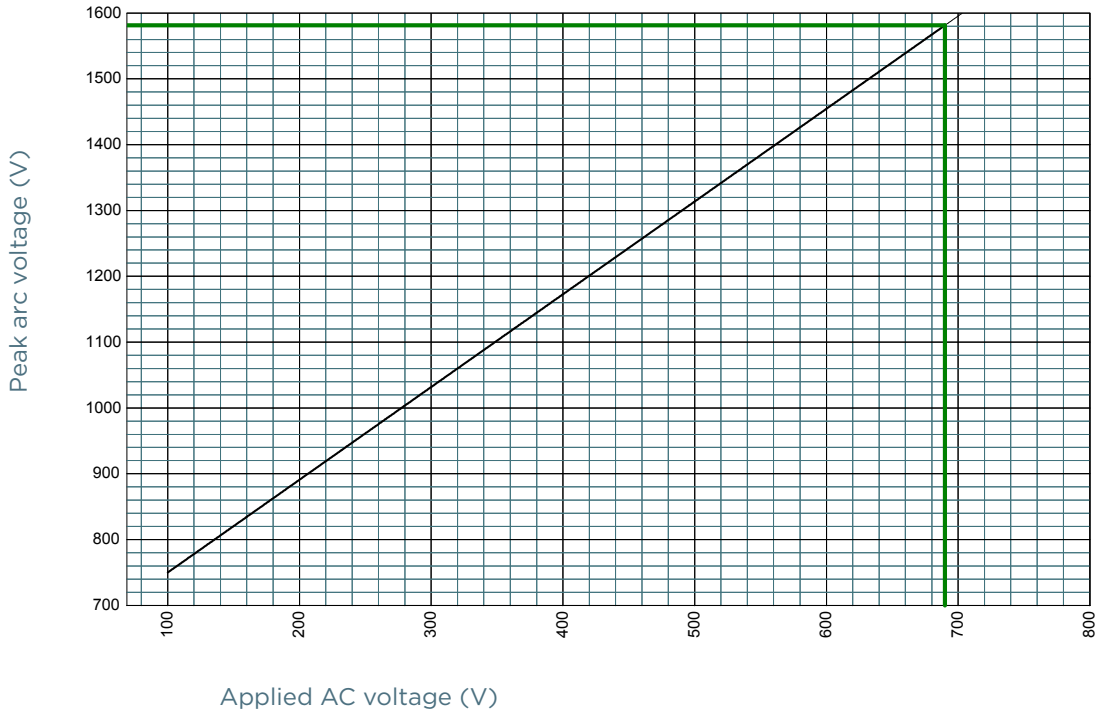

MERSEN reserves the right to change, update or correct, without notice, any information contained in this datasheet.

PEAK ARC VOLTAGE

Size 1

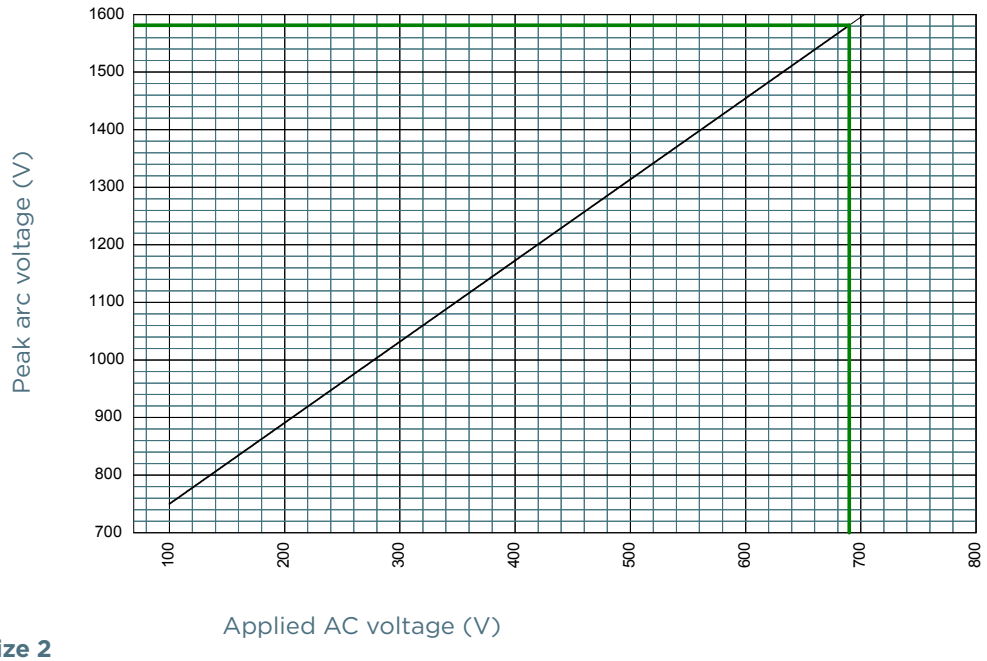

Size 2

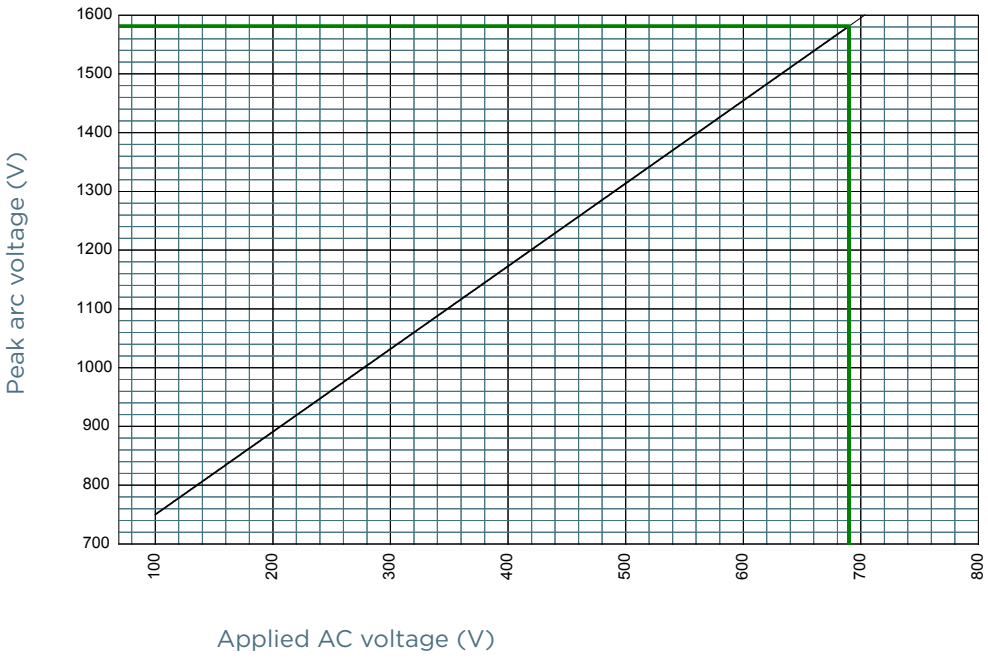

MERSEN reserves the right to change, update or correct, without notice, any information contained in this datasheet.

PEAK ARC VOLTAGE

Size 3

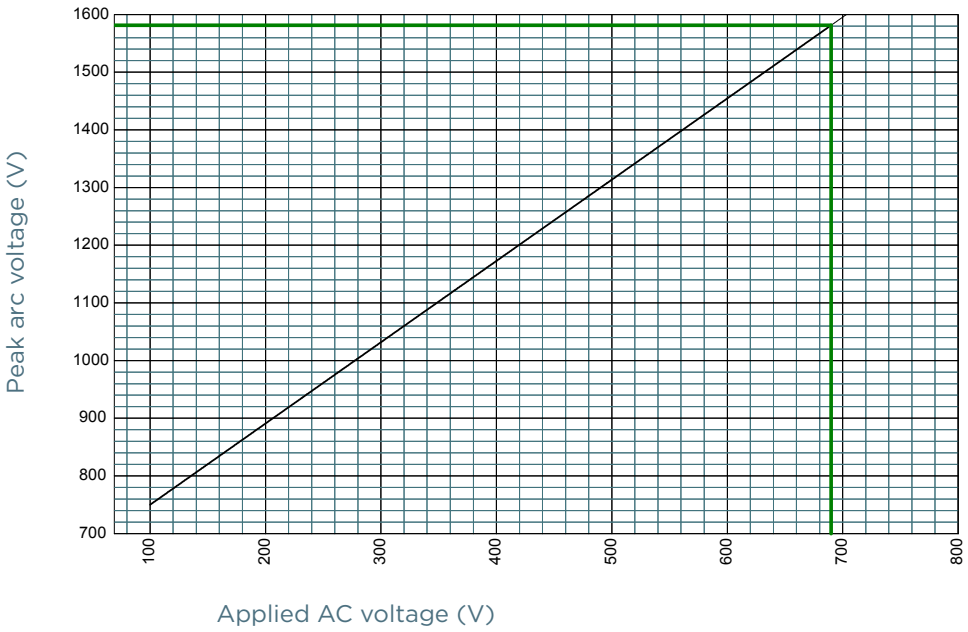

MERSEN reserves the right to change, update or correct, without notice, any information contained in this datasheet.

DIMENSIONS

NH size 000 aR

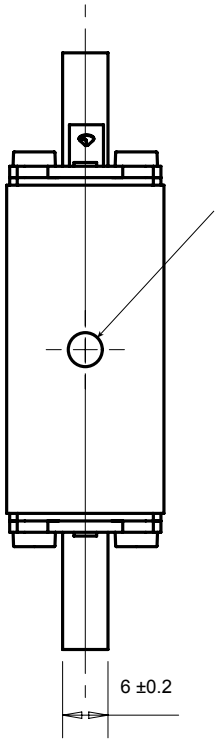

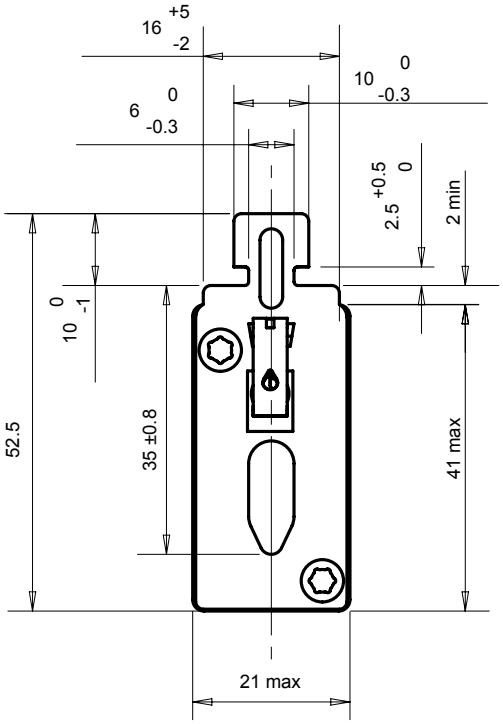

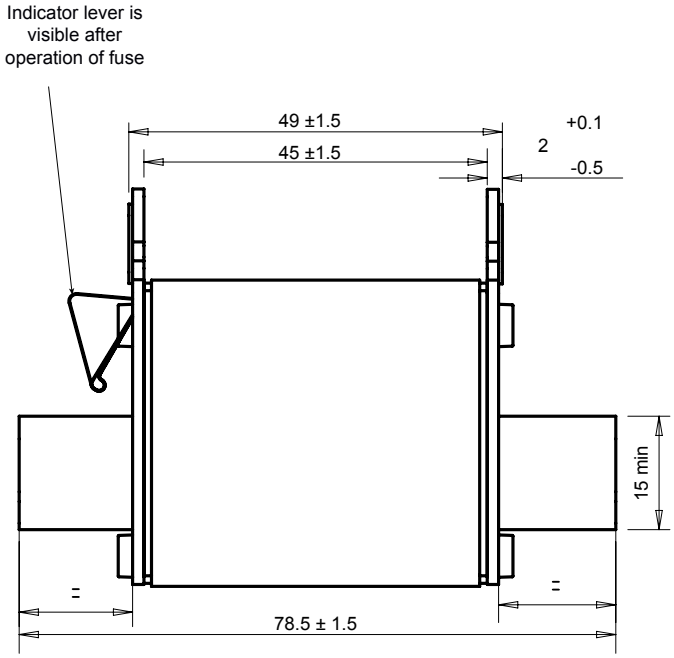

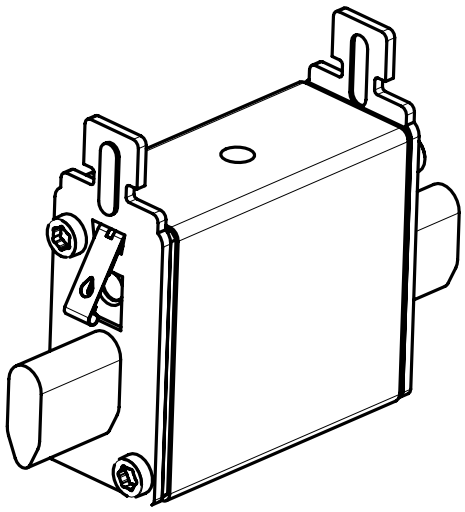

Dimensions in mm

MERSEN reserves the right to change, update or correct, without notice, any information contained in this datasheet.

DIMENSIONS

NH size 00 aR

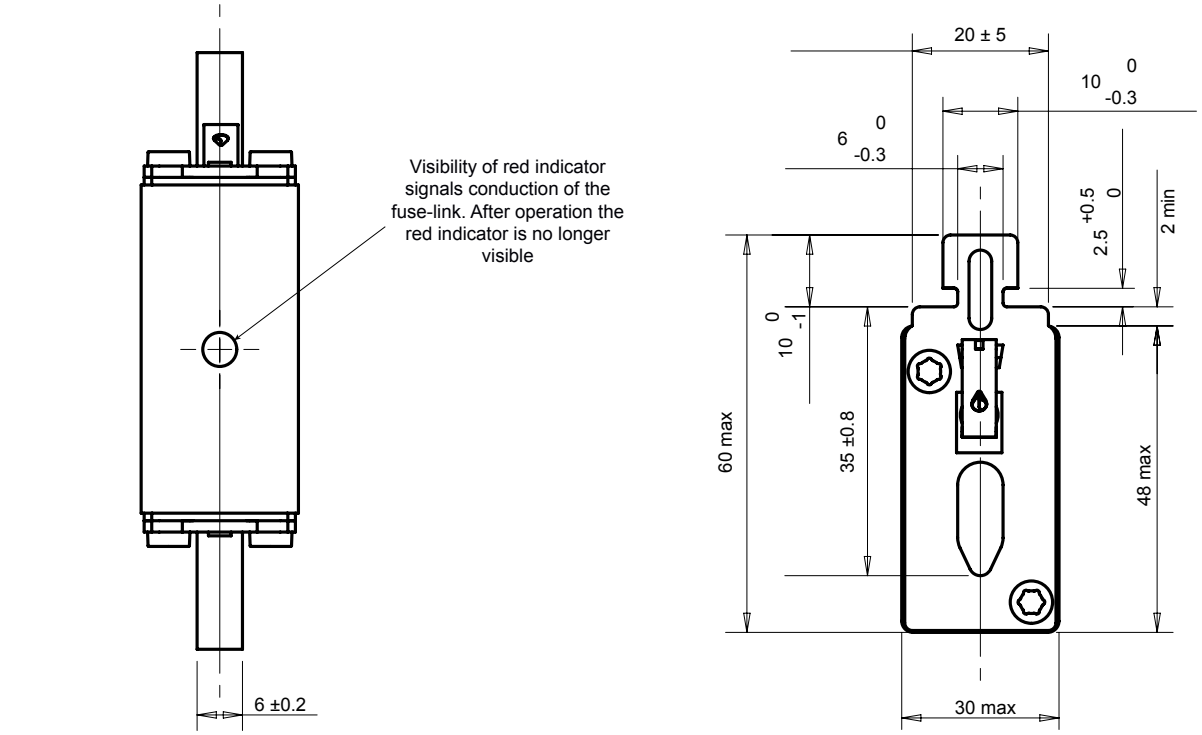

Dimensions in mm

MERSEN reserves the right to change, update or correct, without notice, any information contained in this datasheet.

DIMENSIONS

NH size 0 aR

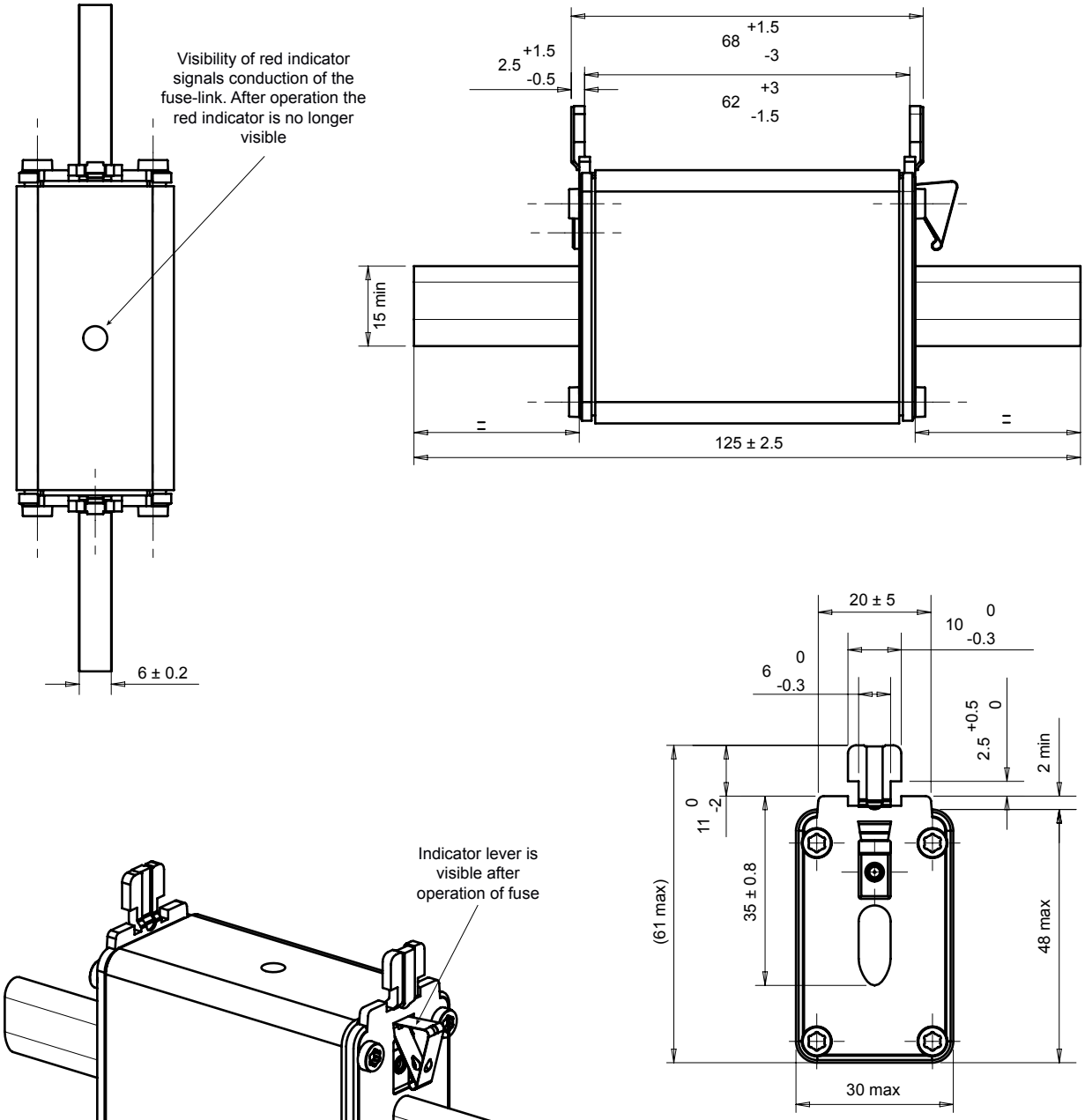

Dimensions in mm

MERSEN reserves the right to change, update or correct, without notice, any information contained in this datasheet.

DIMENSIONS

NH size 1 aR

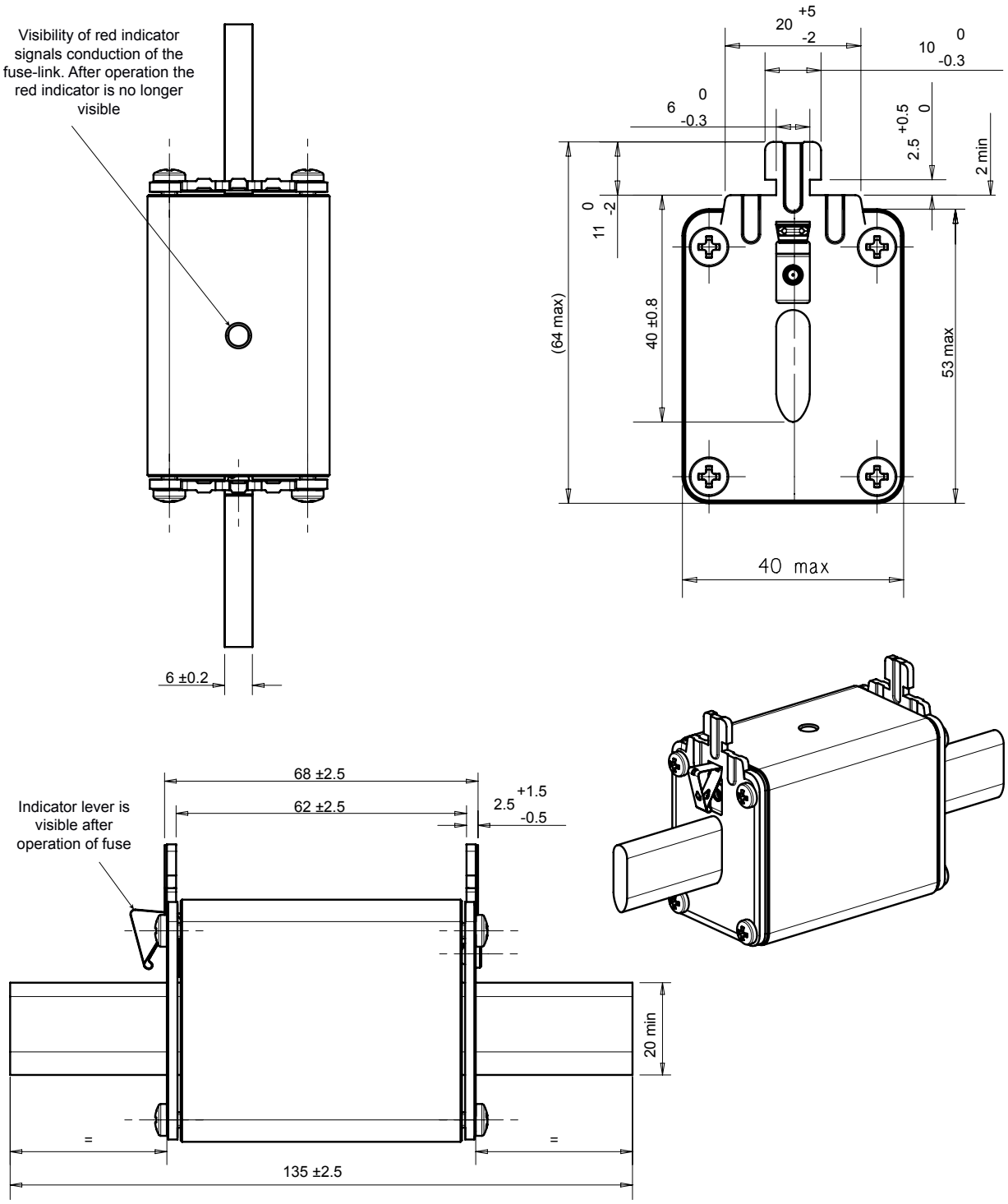

Dimensions in mm

MERSEN reserves the right to change, update or correct, without notice, any information contained in this datasheet.

DIMENSIONS

NH size 2 aR

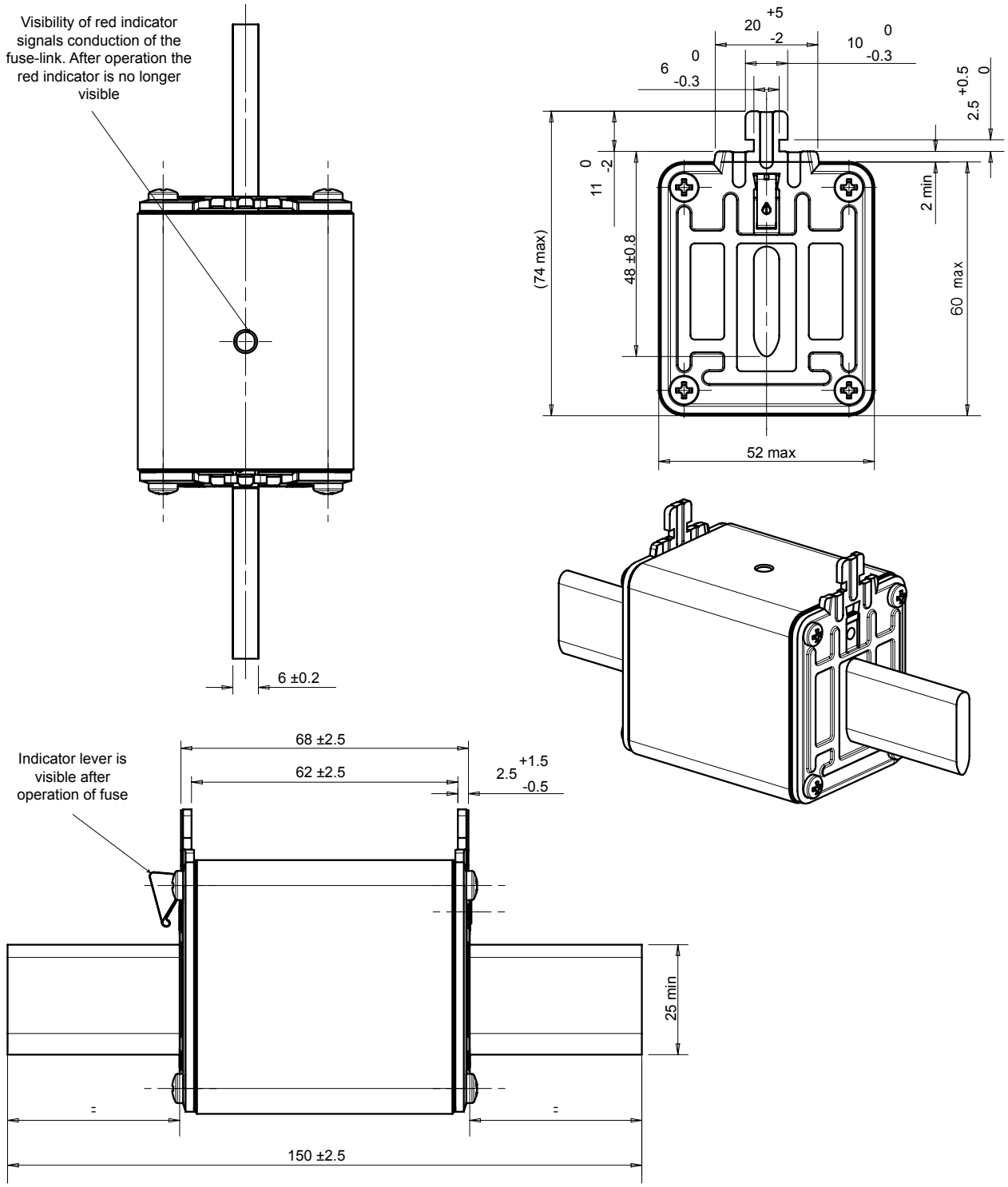

Dimensions in mm

MERSEN reserves the right to change, update or correct, without notice, any information contained in this datasheet.

DIMENSIONS

NH size 3 aR

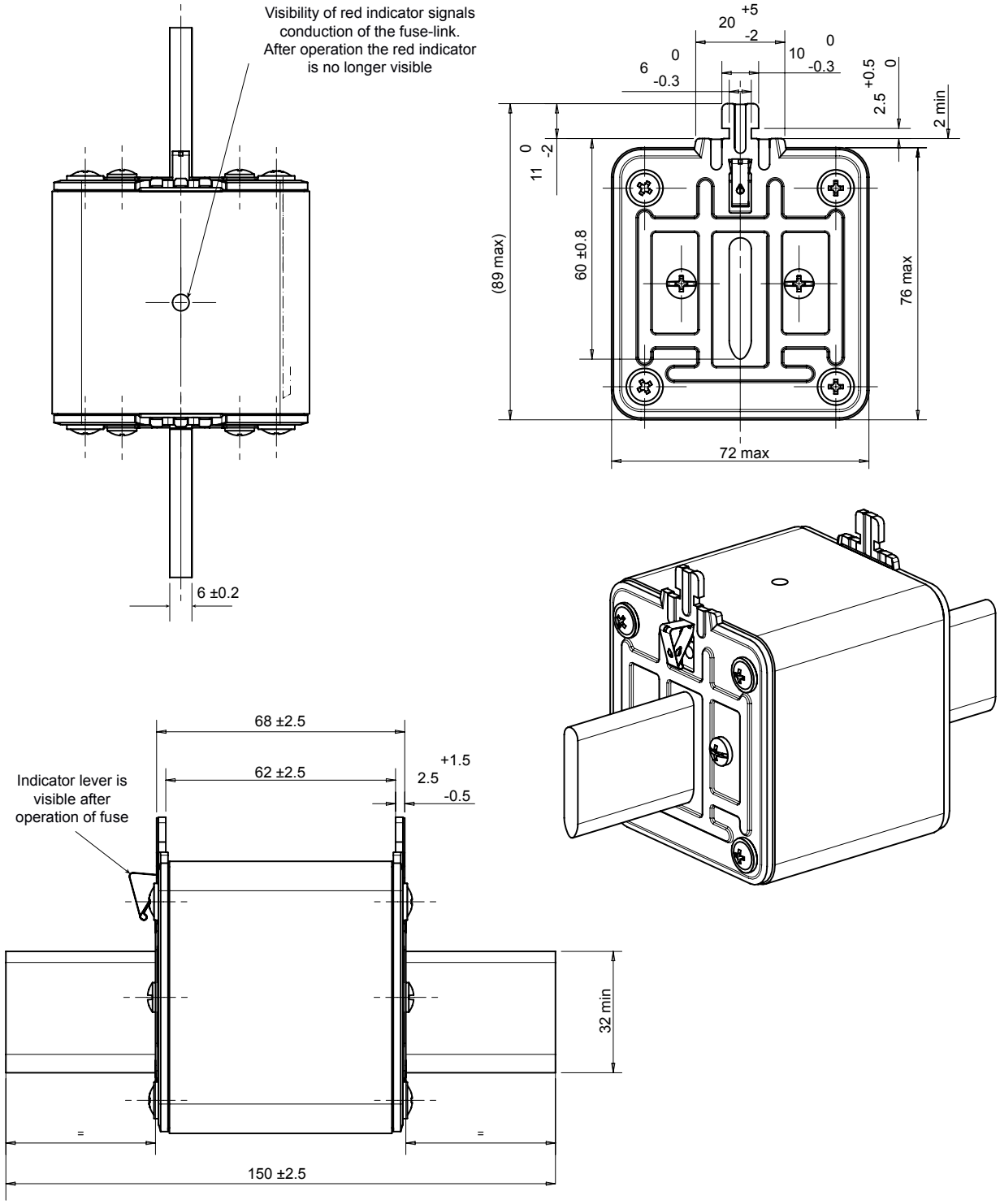

MERSEN reserves the right to change, update or correct, without notice, any information contained in this datasheet.