stay connected

# MOSA 7/8" FEMALE 0° FIELD-WIREABLE (IDC)

5-pol., 0,75-1,50mm²

Plastic housings with good resistance against chemicals and oils. The resistance to aggressive media should be individually tested for your application. Further details on request.

## Link to Product

### Illustration



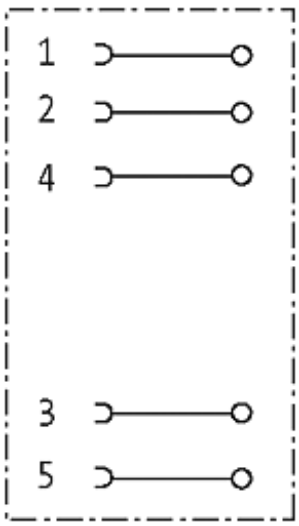


The information in this brochure has been compiled with the utmost care.
Liability for the correctness completeness and topicality of the information is restricted to gross negligence. Version: 08/17

MURR ELEKTRONIK
stay connected

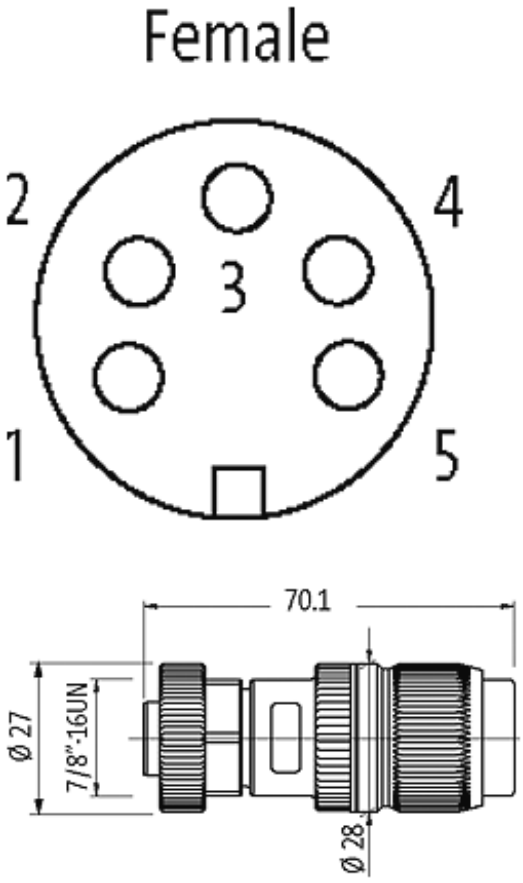


Product may differ from Image

| | |
|---|---|
| **Form** | |
| Form | 78211 |
| **Technical Data** | |
| Operating voltage | max. 230/400 V AC/DC |
| Rated surge voltage | 4 kV |
| Operating current per contact | max. 10 A |
| Material group | IEC 60664-1, category I |
| Connection cross section | 0.75...1.5 mm² (conductor diameter min. 0.15 mm) |
| Coding | A-coded, 5-pole |
| Sealing range (cable Ø) | 6.8...9.5 mm |
| Wire isolation | PVC, PP, TPE |
| Outer wire Ø | max. 2.8 mm |
| Locking of ports | Screw thread 7/8" (recommended torque 1.5 Nm) self-securing |
| Protection | IP65 and IP67 when plugged and screwed down (EN 60529) |
| **General data** | |
| Pollution Degree | 3 |
| Temperature range | -40...+85 °C |
| **Commercial data** | |
| country of origin | DE |
| customs tariff number | 85366990 |

The information in this brochure has been compiled with the utmost care.
Liability for the correctness completeness and topicality of the information is restricted to gross negligence. Version: 08/17

stay connected

| | |
|---|---|
| EAN | 4048879134729 |
| eClass | 27279221 |
| minimum order quantity | 1 |

The information in this brochure has been compiled with the utmost care.
Liability for the correctness completeness and topicality of the information is restricted to gross negligence. Version: 08/17

Murrelektronik GmbH | Falkenstraße 3 | 71570 Oppenweiler | Fon +49 (71 91) 47-0 | Fax +49 (71 91) 47-491000 | shop@murrelektronik.com | shop.murrelektronik.com