# EVCA27

## Connection cable

VDOGE050MSS0001H05STGE050MSS

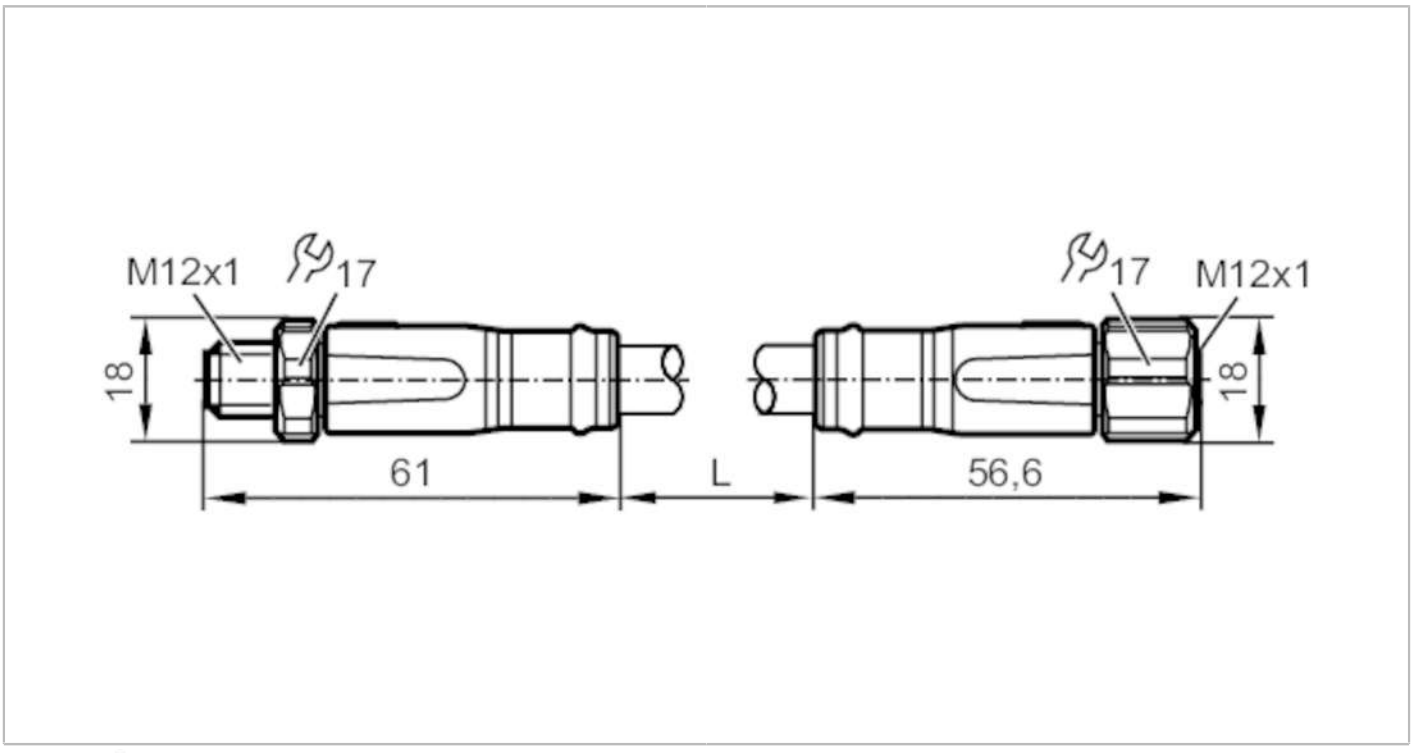


| | | |
|---|---|---|
| **Application** | | |
| Special feature | | Free from silicone; Halogen-free; Gold-plated contacts; Drag chain suitability |
| Design | | power cable, L-coded |
| Application | | industrial application |
| Free from silicone | | yes |
| **Electrical data** | | |
| Operating voltage | [V] | 63 DC |
| Protection class | | III |
| Max. current load total | [A] | 16 |
| **Operating conditions** | | |
| Ambient temperature | [°C] | -25...90 |
| Note on ambient temperature | | cULus: ...80 °C |
| Storage temperature | [°C] | -25...55 |
| Storage humidity | [%] | 10...100 |
| Other climatic conditions for storage according to stated class | | 1K22/ DIN 60721-3-1 |
| Protection | | IP 65; IP 67; IP 69K |
| **Mechanical data** | | |
| Weight | [g] | 259.5 |
| Moulded-body material | | TPU |
| Material nut | | brass, nickel-plated |
| Sealing material | | FKM |
| Drag chain suitability | | yes |

# EVCA27

## Connection cable

VDOGE050MSS0001H05STGE050MSS

| | | |
|---|---|---|
| Drag chain suitability | bending radius for flexible use | min. 10 x cable diameter |
| | travel speed | max. 3.3 m/s for a horizontal travel length of 5 m and max. acceleration of 5 m/s² |
| | bending cycles | > 5 Mio. |
| | torsional strain | ± 180 °/m |

### Remarks

| | |
|---|---|
| Pack quantity | 1 pcs. |

### Electrical connection - plug

Connector: 1 x M12, straight; coding: L; Moulded body: TPU, orange; Locking: brass, nickel-plated; Contacts: gold-plated; Tightening torque: 0.6...1.2 Nm




### Electrical connection - Connection

Cable: 1 m, PUR, Halogen-free, grey, Ø 10.1 mm; 5 x 2.5 mm² (141 x Ø 0.15 mm )

Connection




### Electrical connection - socket

Connector: 1 x M12, straight; coding: L; Moulded body: TPU, orange; Locking: brass, nickel-plated; Sealing: FKM; Contacts: gold-plated; Tightening torque: 0.6...1.2 Nm

