# O4P501

## Retro-reflective sensor

O4P-FPKG/2M

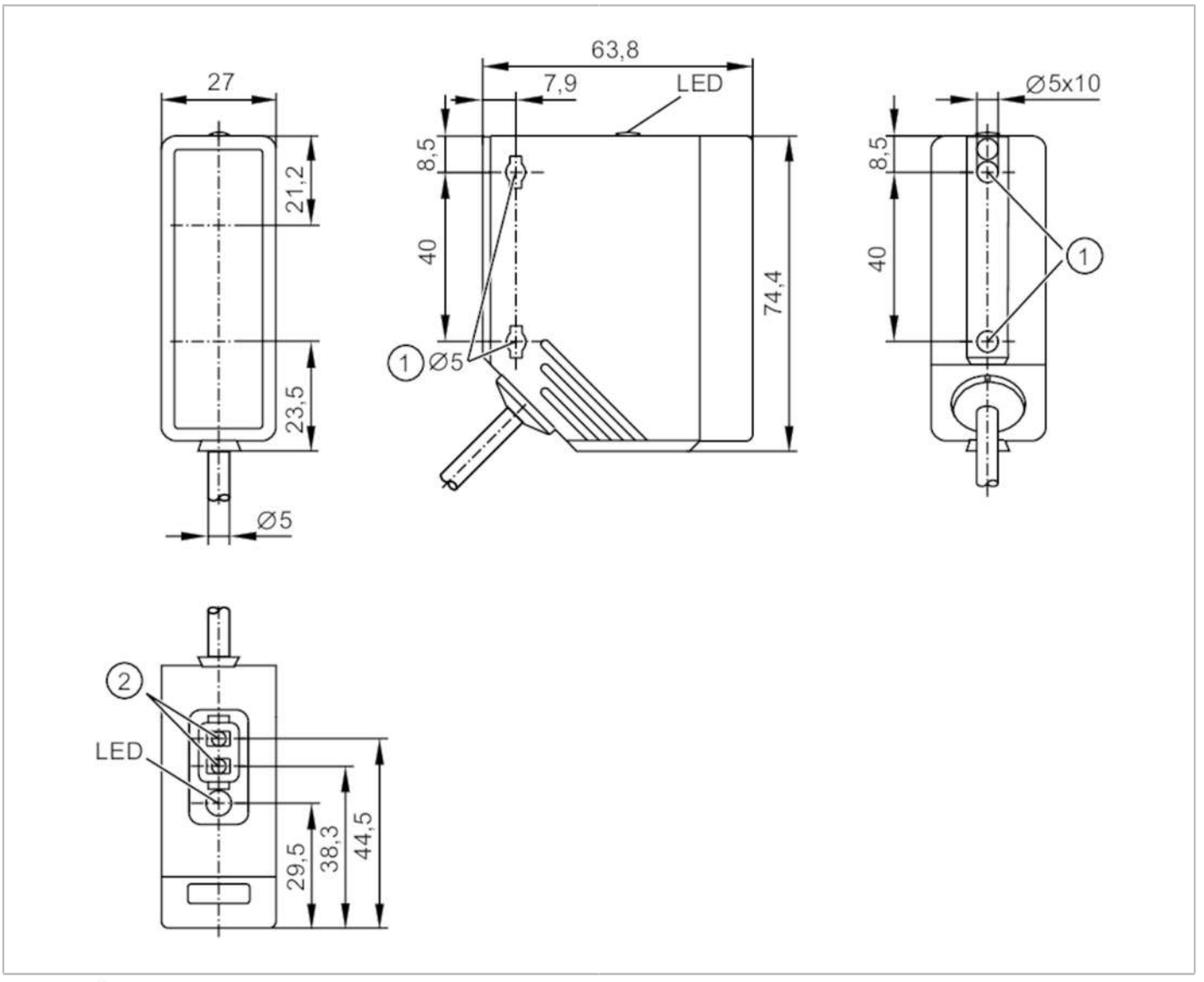


| | | |
|---|---|---|
| **Product characteristics** | | |
| Type of light | | red light |
| Housing | | rectangular |
| **Application** | | |
| Special feature | | polarisation filter |
| Function principle | | Retro-reflective sensor |
| **Electrical data** | | |
| Operating voltage | [V] | 10...36 DC |
| Current consumption | [mA] | 20 |
| Protection class | | II |
| Reverse polarity protection | | yes |
| Type of light | | red light |
| Wave length | [nm] | 624 |

# O4P501

## Retro-reflective sensor

O4P-FPKG/2M

| | | | |
|---|---|---|---|
| **Outputs** | | | |
| Electrical design | | PNP | |
| Output function | | light-on/dark-on mode; (programmable) | |
| Max. voltage drop switching output DC | [V] | 2.5 | |
| Permanent current rating of switching output DC | [mA] | 200 | |
| Switching frequency DC | [Hz] | 2000 | |
| Short-circuit protection | | yes | |
| Type of short-circuit protection | | pulsed | |
| Overload protection | | yes | |
| **Detection zone** | | | |
| Range referred to prismatic reflector | [m] | 0.3...22; (Prismatic reflector Ø 80 E20005) | |
| Range adjustable | | yes | |
| Max. light spot diameter | [mm] | 660 | |
| Light spot dimensions refer to | | at maximum range | |
| Polarisation filter available | | yes | |
| **Operating conditions** | | | |
| Ambient temperature | [°C] | -25...60 | |
| Protection | | IP 67 | |
| **Tests / approvals** | | | |
| EMC | | EN 60947-5-2 | |
| MTTF | [years] | 434 | |
| **Mechanical data** | | | |
| Weight | [g] | 207.5 | |
| Housing | | rectangular | |
| Dimensions | [mm] | 74.4 x 27 x 63.8 | |
| Materials | | housing: PA; bezel: stainless steel; operator interface: TPE | |
| Lens material | | PMMA | |
| Lens alignment | | side lens | |
| **Displays / operating elements** | | | |
| Display | | switching status | 1 x LED, yellow |
| Teach function | | yes | |
| Electronic lock | | yes | |
| **Remarks** | | | |
| Remarks | | operating voltage "supply class 2" according to cULus | |
| Pack quantity | | 1 pcs. | |

# O4P501

## Retro-reflective sensor

O4P-FPKG/2M

## Electrical connection

Cable: 2 m, PUR; 3 x 0.34 mm²

### Connection

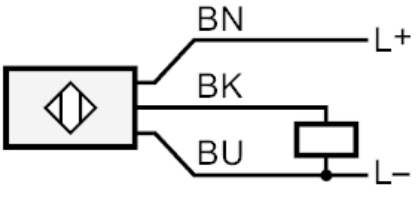


| | |
|---|---|
| | Core colours : |
| BK = | black |
| BN = | brown |
| BU = | blue |

## Diagrams and graphs

excess gain graph

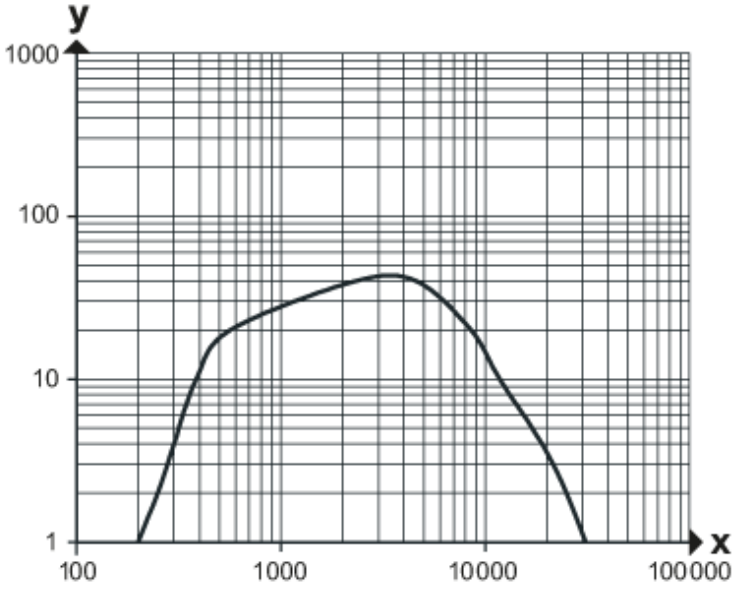


x: Abstand [mm]

y: Funktionsreservefaktor