E11622

Jumper cable with valve plug

VVDAA040MSS0002H03STGH020MSS

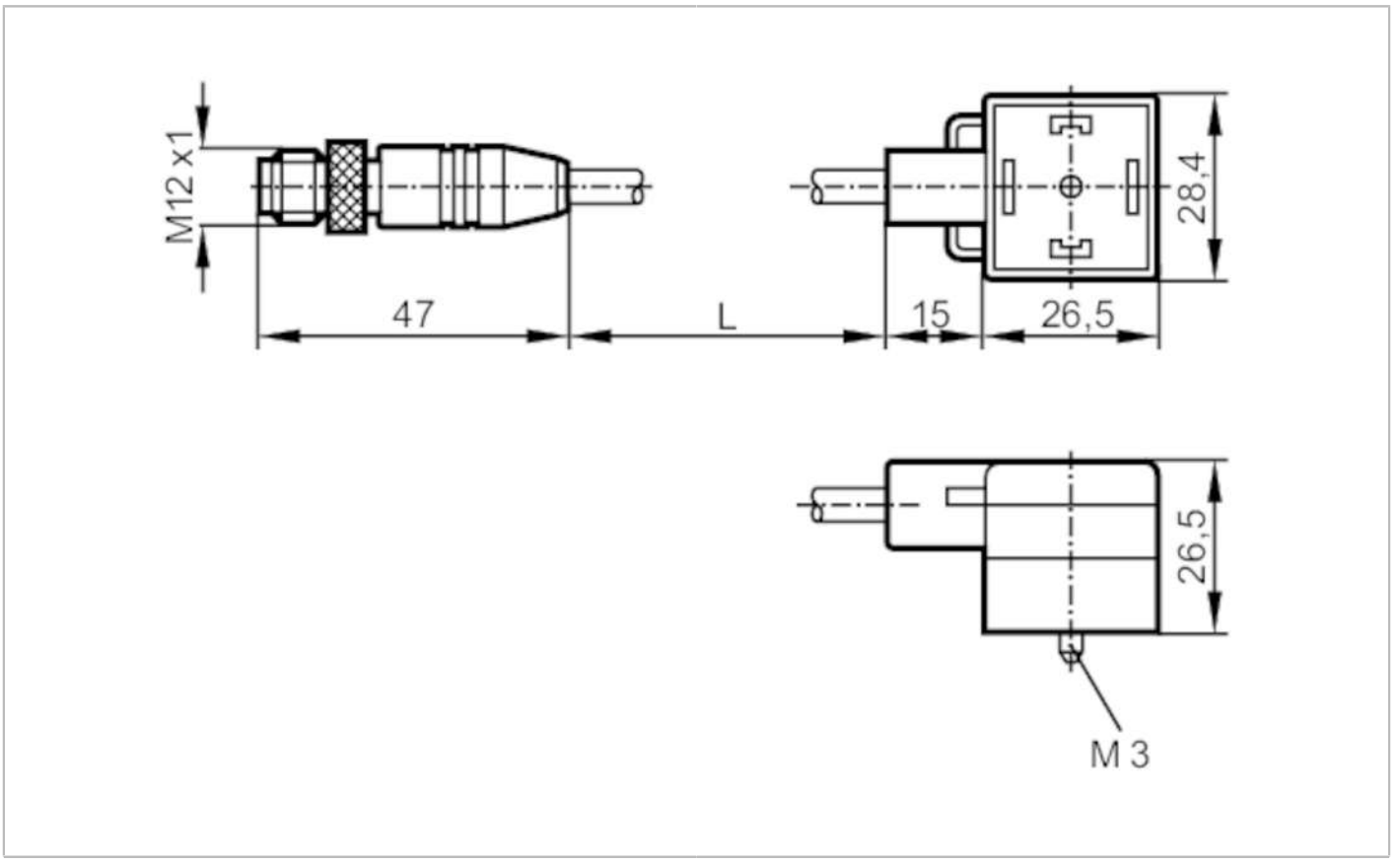

Application		
Application		current measurement
Electrical data		
Operating voltage	[V]	< 24 AC/DC
Operating conditions		
Ambient temperature	[°C]	-40...90
Protection		IP 67; IP 69K
Mechanical data		
Weight	[g]	152.5
Materials		TPU
Moulded-body material		TPU
Material nut		brass, nickel-plated
Accessories		
Items supplied		screw
		panel for labelling
Remarks		
Pack quantity		1 pcs.

E11622

Jumper cable with valve plug

VVDAA040MSS0002H03STGH020MSS

Electrical connection - plug

Connector: 1 x M12, straight; coding: A; Moulded body: TPU; Locking: brass, nickel-plated; Tightening torque: 0.5 Nm

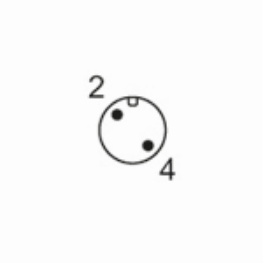

Electrical connection

Cable: 2 m, PUR; 2 x 0.75 mm²

Connection

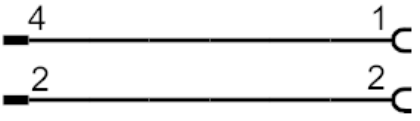

Electrical connection - socket

Connector: 1 x valve type A DIN, angled; Moulded body: TPU; Locking: brass, nickel-plated; Tightening torque: 0.5 Nm

