WORLD'S LEADING MANUFACTURER
OF HAZARDOUS AREA PORTABLE
& TEMPORARY LIGHTING

Hazard Lamp

Zones: 0, 1 and 2





Product Overview

The HL-95 Hazard Lamp is a semi-portable, free standing illuminated warning device CE marked to the ATEX Directive for safe use in Zones 0, 1 or 2 hazardous areas.

The HL-95 is powered by an air-depolarised primary cell battery, which has an exceptionally high capacity from a relatively small, light weight package size. A single battery, used in the flashing light output mode, provides continuous duration for up to 1500 hours, or two months. In static mode where the lamp is continuously lit, the duration will be up to 500 hours. Operation of the lamp and selection of flashing or static mode is made from a single three position toggle switch mounted on the outside of the lamp. A further extension to battery duration can be achieved by selecting 'daylight cut-out mode' via the internally mounted selection switch. If the lamp is being used outdoors a light dependant resistor will detect when darkness falls and accordingly activate the lamp. Equally, when light levels increase, it automatically switch off, conserving battery energy. It is estimated that a lamp set to flashing and in daylight cut-out mode could operate for up to six months from a single battery.

The HL-95 has two lenses positioned 'back to back' with the light output from these lenses being greater than 2cd. Light is provided by a pair of 'everlasting' light emitting diodes. The use of such solid state devices allows the lamp to be sited in zone 0, 1 or 2 hazardous areas. The light emitting diodes are coloured amber and are positioned behind a transparent plastic lens. The lens is protected from damage by a stainless steel guard fitted directly to the impact resistant, static dissipative polypropylene lamp body.

NSN Codes

6120-99-7091078 - HL-95MOD

Features & Benefits

- Approved for safe use in Zones 0, 1 or 2
- Flashing or static output selectable
- Operation in flashing mode up to 2 months
- Daylight cut-out mode selectable
- Ultra-bright L.E.D. light source
- 180° bi-directional lens arrangement
- Highlighting obstacles in the hazardous area
- Effective demarcation of hazardous area zones

Certifications

0598 NATO

Technical Specification

Product Reference		**HL-95**
Product Description		Primary Battery Operated Safety Hazard Lamp
Code		II 1 G Ex ia op is IIC T4 Ga
Type of Protection		"i" intrinsic safety
Area of Classification (Gas)		Zones 0, 1 and 2, Gas Groups IIA, IIB and IIC
Temp. Classification		T4
Ambient Temperature		-10°C to +40°C
Certificate		BAS 99 ATEX 1044X
Enclosure		Static dissipative polypropylene with metal lens guard
Lens		Transparent plastic, colour as light source
Light Output		≥ 2cd
Light Source:	**Type**	Solid State LED
	Colour	Amber
Power Source:	**Part Number**	**HL-3155X**
	Type	Air Depolarised Primary Cell Battery
	Volts	5.6v
	Capacity	40Ah
	Weight	1.7kg
	Dimensions	L 110 x W 110 x H 140 mm
Light Duration		1500hrs flashing mode, 500hrs static mode
Ingress Protection		IP21
Weight (incl. battery)		2.9kg

- All information has been gathered under laboratory conditions, the user must regard the values given as approximate.
- Changes may be made to the above specification without notification, details are available on request.

Product Dimensions

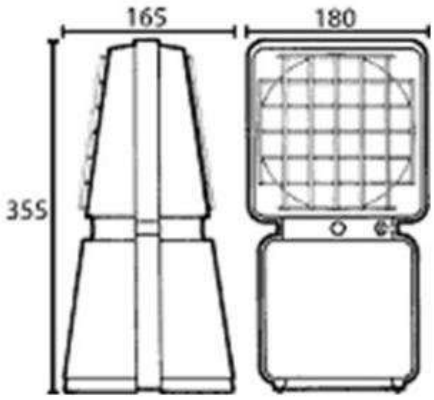

Version: SL014 DF528 Issue 8

Wolf Safety Lamp Company, Saxon Road Works, Sheffield, S8 0YA, UK
• **T:** +44 (0) 114 255 1051 • **F:** +44 (0) 114 255 7988
• **E:** info@wolfsafety.com • **www.wolfsafety.com**