REDUBLOC 3.1

Single device intended for water connection, combining 3 functions in one body

New

Upstream :
Female union free nut 3/4”



3 essential functions combined in one equipment :

1. Isolating Valve
2. Pressure reducing valve
3. Approved controllable check valve

Downstream:
Double Machining

1/2” Female

3/4” Male

- Easy mounting.
- Respect for standards.
- Competitive price.
- Reduced weight and dimension.
- 3 times less time to install.
- Simple construction ensuring reliability and longevity.

WATTS®
INDUSTRIES
A Division of Watts Water Technologies Inc.

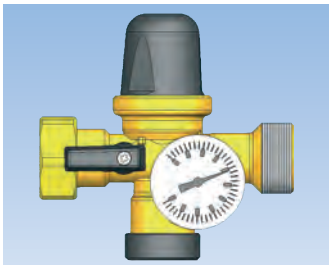

in option - REDUBLOC 3.1 with pressure checking gauge

Application :

REDUBLOC 3.1 is a device destined for cold (or hot) water supply for apartments, individual homes, hotel rooms, bath rooms or kitchens.

It integrates 3 functions in one compact device:

- Isolating: the isolating tap with brass ball valve allows isolating the downstream circuit from the main water supply.
- Reducing and controlling the pressure: its pressure reducing valve is factory set at 3 bar. It allows limiting the pressure in drinking water network, contributes to a better comfort and controls the water consumption.
- Protecting: the controllable check valve is certified (NF, BELGAQUA, KIWA, WRAS, DVGW…), in conformity with the regulations in force. It prevents any water return.
- Medium: water.

Advantages :

Save of time: 1 only assembly for 3 essential functions.
Respect of standards: the pressure reducing valve protects the installation against excessive pressure, the check valve ensures the sanitary conformity of the connecting.
Simple fitting: its installation is very rapid, it is fitted directly after the water meter, with its union nut F3/4".
Competitive price: single construction, allowing a competitive price compared to the cost of 3 different devices to be installed in order to guarantee the same functions.

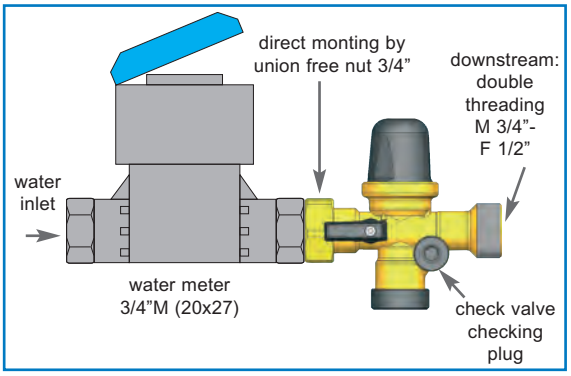

Specifications :

Max. temperature: 70°C.
Max. upstream pressure: 15 bar.
Pressure reducing valve factory set at 3 bar.
The setting is adjustable between 1.5 and 4 bar.
Controllable check valve approved.
REDUBLOC 3.1 functions in horizontal and vertical position (rising fluid), but we recommend an assembling with an upwards setting screw in order to avoid the deposit of impurities.
Connection: Upstream: Female union free nut 3/4", Downstream: Double threading M 3/4"-F 1/2", solving the technical constraints on site.

References :

Ref. : 2282900 REDUBLOC 3.1
Ref. : 2282901 REDUBLOC 3.1 with pressure checking gauge

Materials :

Designation	material
Body	brass
Isolating valve	brass CW614N
Tap trimming	virgin PTFE
Valve knob	PA6
Spring (pressure reducing valve)	zinc plated steel

Designation	material
Diaphragm	EPDM
Seals	EPDM
Check valve	POM
Spring (check valve)	stainless steel
Control plug	PA

Dimensions (in mm)

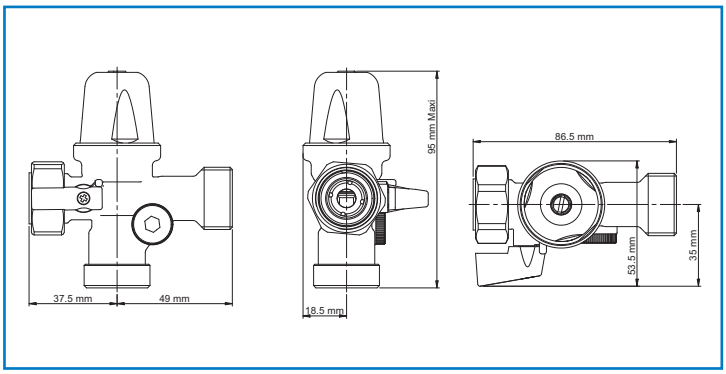

Pressure drop curve / headloss

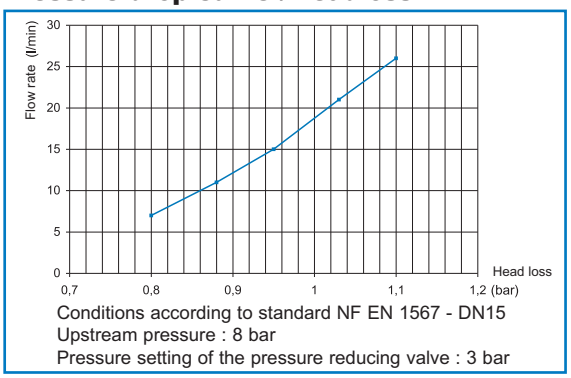

Conditions according to standard NF EN 1567 - DN15
Upstream pressure : 8 bar
Pressure setting of the pressure reducing valve : 3 bar

The photographs, illustrations and descriptions contained in this brochure are given for information only.
Watts Industries reserves the right to change the technical specifications or the design of these products without prior notice.

A Division of Watts Water Technologies Inc.

WATTS INDUSTRIES France
1590 avenue d'Orange CS 10101 SORGUES
84275 VEDENE cedex - FRANCE
Tel. +33 (0)4 90 33 28 28 - Fax +33 (0)4 90 33 28 29/39
www.wattsindustries.com
E-mail : info@wattsindustries.fr

Re-order no. 55(20)-UK-14/09