KQ6008

Capacitive sensor

KQ-3120NFPKG/2T/0,04M/AS

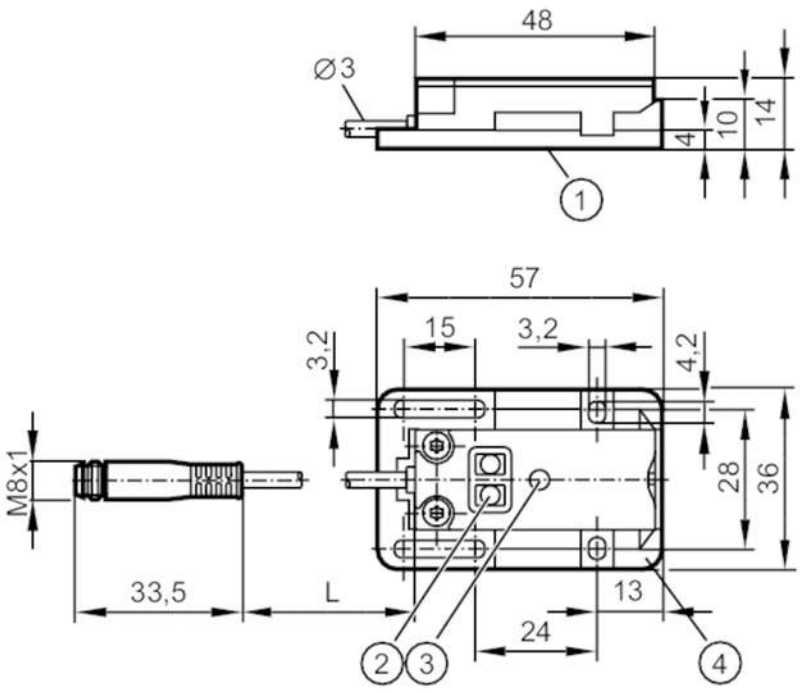

1 sensing face
2 programming buttons
3 LED
4 Mounting adapters E12153

Product characteristics		
Electrical design		PNP
Output function		normally open / normally closed; (selectable)
Sensing range	[mm]	12
Communication interface		IO-Link
Housing		rectangular
Dimensions	[mm]	20 x 14 x 48
Application		
Installation		detection through non-metallic container wall or on bypass pipes
Media		dry bulk material; liquids
Electrical data		
Operating voltage	[V]	10...30 DC
Current consumption	[mA]	< 17
Protection class		III
Reverse polarity protection		yes
Measuring principle		capacitive
Outputs		
Electrical design		PNP
Output function		normally open / normally closed; (selectable)

KQ6008

Capacitive sensor

KQ-3120NFPKG/2T/0,04M/AS

Max. voltage drop switching output DC	[V]	2.5	
Permanent current rating of switching output DC	[mA]	100	
Switching frequency DC	[Hz]	10	
Short-circuit protection		yes	
Type of short-circuit protection		pulsed	
Overload protection		yes	
Detection zone			
Sensing range	[mm]	12	
Real sensing range Sr	[mm]	12 ± 10 %	
Accuracy / deviations			
Hysteresis	[% of Sr]	1...15	
Switch point drift	[% of Sr]	-20...20	
Interfaces			
Communication interface		IO-Link	
Transmission type		COM1 (4,8 kBaud)	
IO-Link revision		1.1	
SDCI standard		IEC 61131-9 CDV	
Profiles		Smart Sensor	
SIO mode		yes	
Min. process cycle time	[ms]	100.8	
Supported DeviceIDs		Type of operation	DeviceID
		Default	371
Operating conditions			
Ambient temperature	[°C]	-25...80	
Protection		IP 65; IP 67; IP 69K	
Tests / approvals			
EMC		EN 61000-4-2 ESD	8 kV AD
		EN 61000-4-3 HF radiated	10 V/m
		EN 61000-4-4 Burst	2 kV
		EN 61000-4-6 HF conducted	3 V
		EN 55011	class B
Shock resistance		EN 60068-2-27	30 g 6 shocks / 11 ms half-sine (x, y, z)
Vibration resistance		EN 60068-2-6	(10...55 Hz) / 1 mm amplitude, oscillation period 5 min., 30 min. per axis at resonance or 55 Hz
MTTF	[years]	725	
Mechanical data			
Weight	[g]	31.3	
Housing		rectangular	
Mounting		non-flush mountable	
Dimensions	[mm]	20 x 14 x 48	
Materials		housing: PBT glass fibre reinforced; pushbuttons: TPE-U; cover: PC glass fibre reinforced	

KQ6008

Capacitive sensor

KQ-3120NFPKG/2T/0,04M/AS

Displays / operating elements		
Display	switching status	1 x LED, yellow
Teach function	yes	
Electronic lock	yes	

Accessories	
Items supplied	mounting adapter: 1, fitted, E12153

Remarks	
Pack quantity	1 pcs.

Electrical connection - plug

Cable: 0.04 m, PVC; 3 x 0.14 mm²

Connector: 1 x M8; coding: A



Connection

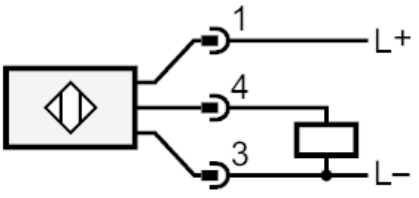

4: OUT / IO-Link