IZ5064

Inductive sensor

IZB31,5-ANKG/2m

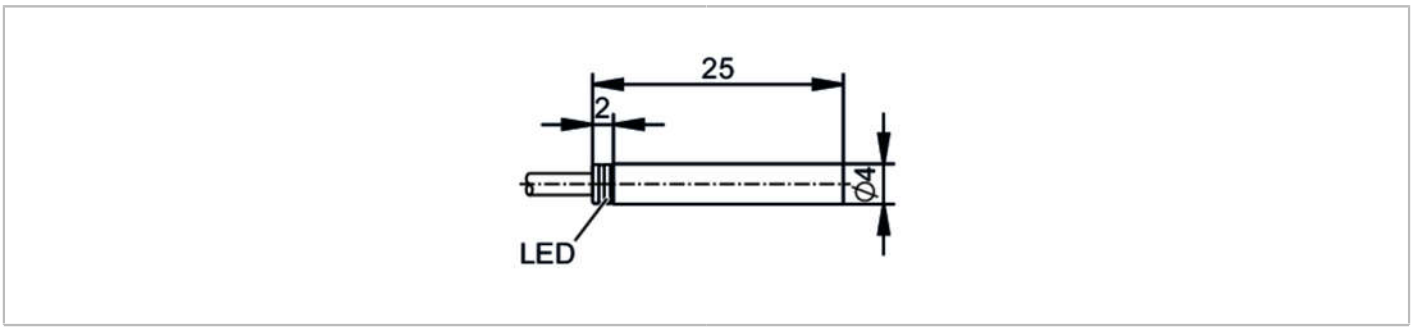

Product characteristics		
Electrical design		NPN
Output function		normally open
Sensing range	[mm]	1.5
Housing		cylindrical
Dimensions	[mm]	Ø 4 / L = 25
Electrical data		
Operating voltage	[V]	10...36 DC
Current consumption	[mA]	15; (24 V)
Protection class		III
Reverse polarity protection		yes
Outputs		
Electrical design		NPN
Output function		normally open
Max. voltage drop switching output DC	[V]	2.5
Permanent current rating of switching output DC	[mA]	100
Switching frequency DC	[Hz]	2000
Short-circuit protection		yes
Type of short-circuit protection		pulsed
Overload protection		yes
Detection zone		
Sensing range	[mm]	1.5
Real sensing range Sr	[mm]	1.5 ± 10 %
Operating distance	[mm]	0...1.2
Accuracy / deviations		
Correction factor		steel: 1 / stainless steel: 0.7 / brass: 0.5 / aluminium: 0.4 / copper: 0.3
Hysteresis	[% of Sr]	1...15
Switch point drift	[% of Sr]	-10...10
Operating conditions		
Ambient temperature	[°C]	-25...70
Protection		IP 65; IP 67

IZ5064

Inductive sensor

IZB31,5-ANKG/2m

Tests / approvals			
EMC		EN 61000-4-2 ESD	4 kV CD / 8 kV AD
		EN 61000-4-3 HF radiated	10 V/m
		EN 61000-4-4 Burst	2 kV
		EN 61000-4-6 HF conducted	10 V
		EN 55011	class B
Mechanical data			
Weight	[g]	24.9	
Housing		cylindrical	
Mounting		flush mountable	
Dimensions	[mm]	Ø 4 / L = 25	
Materials		housing: stainless steel (303/1.4305); sensing face: POM; LED ring: PA	
Displays / operating elements			
Display		switching status	1 x LED ring, yellow cable entry lights translucently
Accessories			
Items supplied		mounting clamp: 1	
Remarks			
Pack quantity		1 pcs.	
Electrical connection			

Cable: 2 m, PUR; 3 x 0.08 mm²

Connection

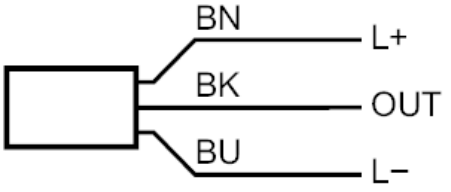

BN:	L+
BK:	OUT DO (NO)
BU:	L-